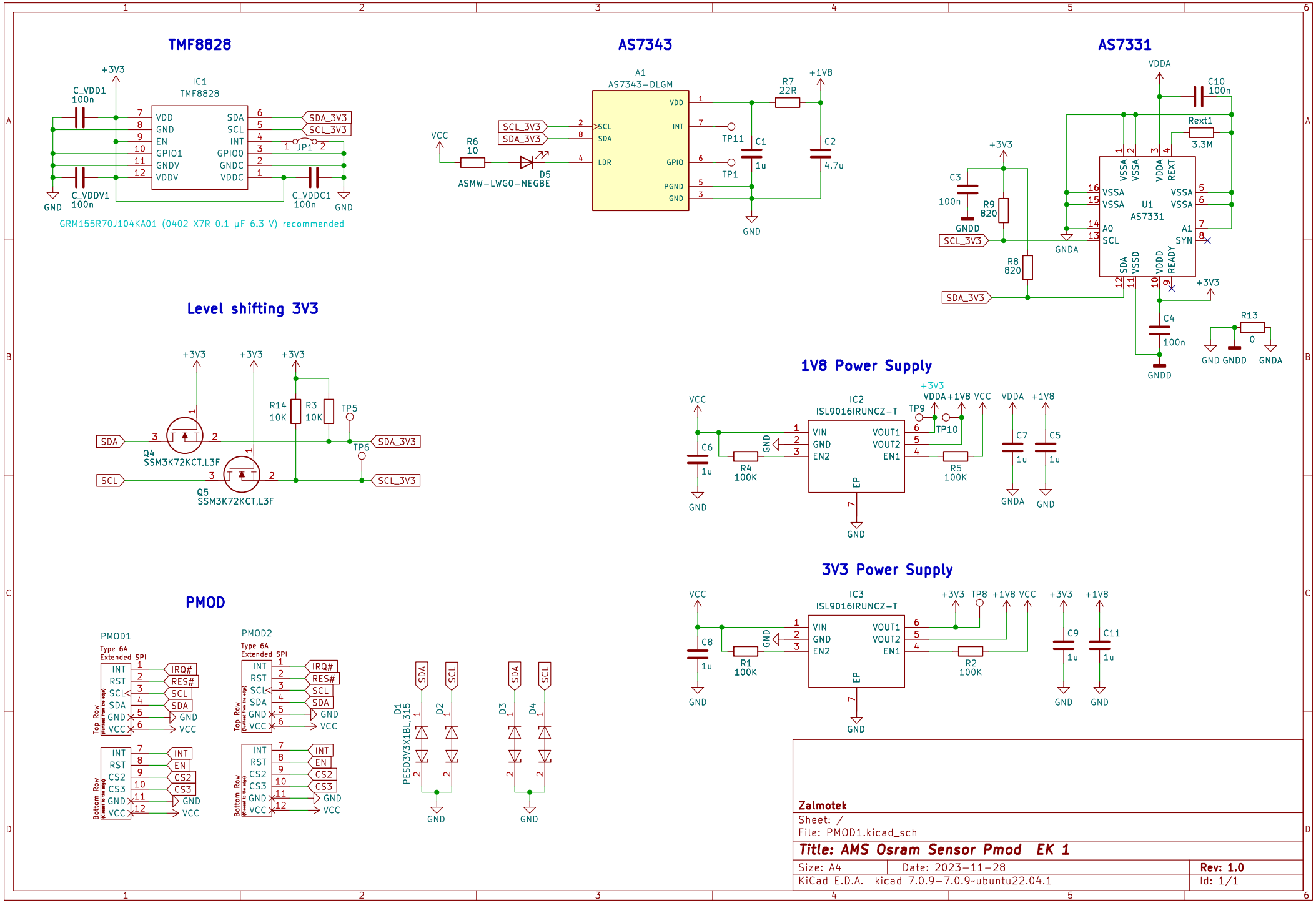
TMF8828
IC1
TMF8828
+3V3
C_VDD1
100n
VDD
GND
EN
GPIO1
GNDV
VDDV
SDA
SCL
INT
GPIO0
GNDC
VDDC
SDA_3V3
SCL_3V3
JP1
C_VDDV1
100n
C_VDDC1
100n
GRM155R70J104KA01 (0402 X7R 0.1 µF 6.3 V) recommended
AS7343
A1
AS7343-DLGM
VCC
R6
10
ASMW-LWG0-NEGBE
D5
LDR
VDD
INT
GPIO
PGND
R7
22R
+1V8
TP11
TP1
C1
1u
C2
4.7u
AS7331
VDDA
C10
100n
Rext1
3.3M
+3V3
C3
100n
R9
820
GNDD
R8
820
U1
AS7331
VSSA
AO
SCL
SDA
VSSD
VDDD
READY
REXT
A1
SYN
GNDA
C4
100n
R13
0
GND GNDD
GNDA
Level shifting 3V3
R14
10K
R3
10K
TP5
TP6
Q4
SSM3K72KCT,L3F
Q5
SSM3K72KCT,L3F
1V8 Power Supply
IC2
ISL9016IRUNCZ-T
VIN
GND
EN2
VOUT1
VOUT2
EN1
EP
TP9
TP10
C6
1u
R4
100K
R5
100K
C7
1u
C5
1u
3V3 Power Supply
IC3
ISL9016IRUNCZ-T
TP8
C8
1u
R1
100K
R2
100K
C9
1u
C11
1u
PMOD
PMOD1
Type 6A
Extended SPI
PMOD2
Type 6A
Extended SPI
Top Row
Bottom Row
INT
RST
SCL
SDA
GND
VCC
IRQ#
RES#
CS2
CS3
EN
D1
PESD3V3X1BL,315
D2
D3
D4
Zalmotek
Sheet: /
File: PMOD1.kicad_sch
Title: AMS Osram Sensor Pmod EK 1
Size: A4
Date: 2023-11-28
Rev: 1.0
KiCad E.D.A. kicad 7.0.9-7.0.9~ubuntu22.04.1
Id: 1/1