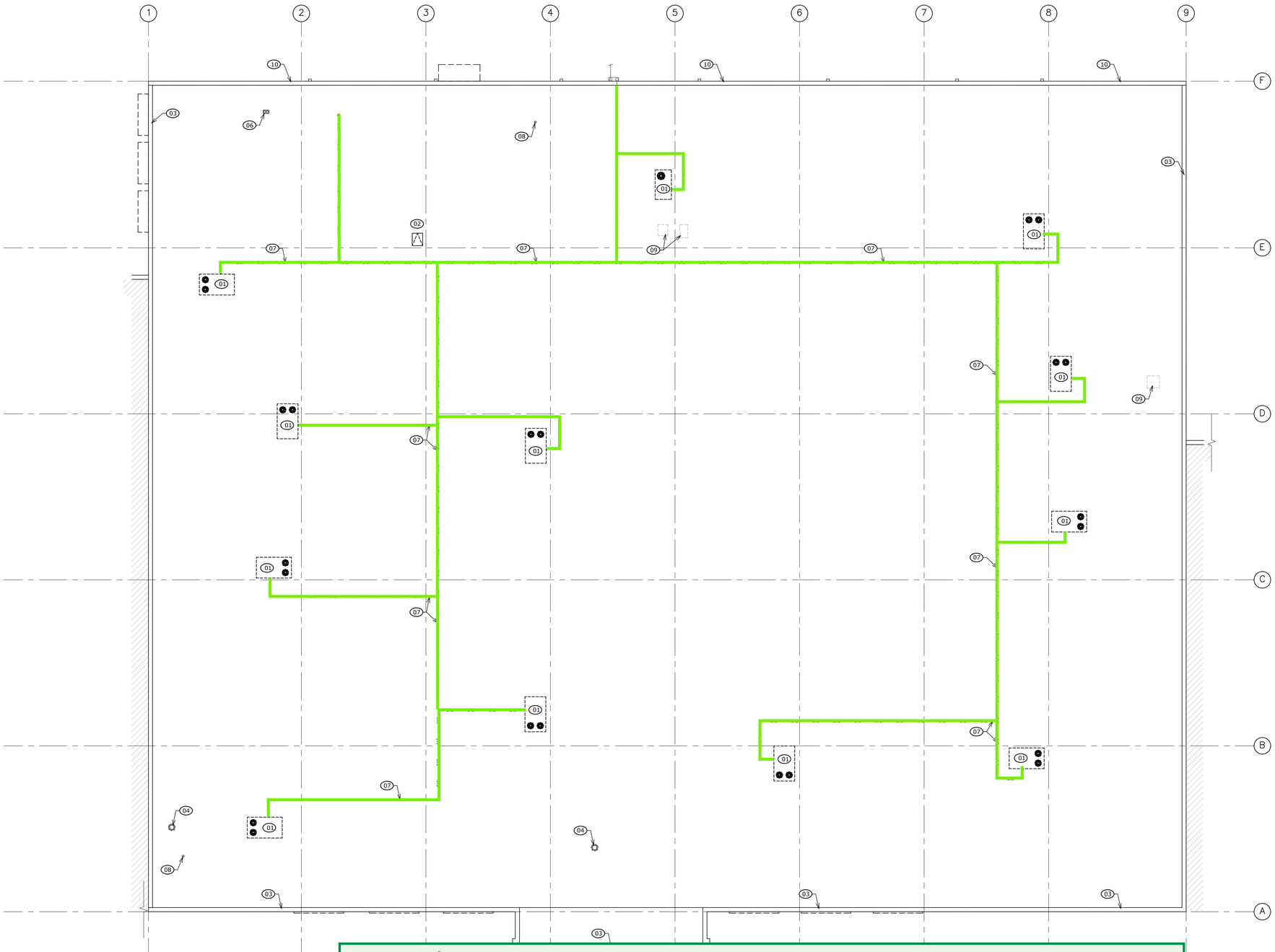

Legend

Gas Piping	886.77 LF

NORTH

1 ROOF PLAN SCALE: 3/32" = 1'-0"

GENERAL NOTES

1. ROOF AND EQUIPMENT MAY BE EXISTING AND SHOWN ONLY FOR MINOR TENANT BUILD-OUT COORDINATION ONLY. THE CONTRACTOR IS RESPONSIBLE FOR BECOMING FAMILIAR WITH THE EXISTING PREMISES AND PROVIDE PRICING FOR ALL WORK QUALIFIED.
2. PROPOSED ROOFING MODIFICATIONS TO EXISTING ROOFING SYSTEM TO BE COMPLETED BY A QUALIFIED AND/OR APPROVED INSTALLER /ROOF CONTRACTOR. G.C. TO COORDINATE ANY LANDLORD REQUIRED ROOFING CONTRACTORS AT TIME OF BID. REGARDLESS ALL NEW ROOFING WORK SHALL BE WARRANTED AND SHALL NOT NEGATIVELY IMPACT EXISTING SYSTEMS THAT ARE TO REMAIN.
3. CONTRACTOR TO VERIFY & COORDINATE NEW EQUIPMENT LOCATIONS WITH M.E.P. SHEETS AND ALL EXISTING STRUCTURAL ELEMENTS. CONTACT BOBS CONSTRUCTION MANAGER WITH QUESTIONS AND VERIFICATION OF FINAL EQUIPMENT LOCATIONS.
4. PRE-FABRICATED CURBS SHALL BE FURNISHED AND INSTALLED BY GENERAL CONTRACTOR AND SET LEVEL. PATCH & FLASH INTO EXISTING ROOF.
5. NO PLUMBING VENTS OR EXHAUST UNITS WITHIN 10'-0" OF INTAKE. ADJUST AS REQUIRED TO AVOID CONFLICT.
6. COORDINATE ROOF CURBS WITH HVAC EQUIPMENT & INSTALL PER MANUF. SUGGESTION.
7. ALL ROOF OPENINGS GREATER THAN 12"x12" SHALL BE FRAMED WITH STEEL ANGLES.
8. MAINTAIN ALL ROOF PENETRATIONS 3'-0" OR GREATER FROM FLOW LINES.
9. ALL DIMENSIONS ARE FOR GENERAL ARRANGEMENT & LOCATION ONLY. ACTUAL REQUIREMENTS & DIMENSIONS SHOULD BE VERIFIED AND COORDINATED WITH EQUIPMENT, SHOP DRAWING SUBMITTALS AND STRUCTURAL FRAMING.
10. ALL 'NEW' EXPOSED EXTERIOR BUILDING MATERIALS TO BE U.V. RATED.
11. ALL CONDENSATE DRAIN CONNECTIONS, TRAPS AND PIPING TO DISCHARGE AWAY FROM UNITS. DISCHARGE TO DRAIN ONTO SPLASH BLOCKS, TYPICAL.
12. REFER TO SHEET D1.0 FOR ADDITIONAL DEMOLITION REQUIRED ON ROOF.
13. ALL REMOVED ROOF EQUIPMENT SHALL BE FULLY PATCHED TO MATCH EXISTING ROOFING SYSTEM.
14. PROVIDE CRICKET INSULATION AROUND EQUIPMENT CURBS TO PROVIDE PROPER DRAINAGE AROUND EQUIPMENT
15. ALL EQUIPMENT SUPPORTED BY CURBS SHALL BE MECHANICALLY ATTACHED TO CURBS. CURBS MUST BE MECHANICALLY ATTACHED TO STRUCTURE. NO GRAVITY CONNECTIONS.
16. REFER TO ELECTRICAL DRAWINGS FOR ADDITIONAL ROOF PENETRATIONS.
17. GC IS TO INCLUDE IN THE BASE CONTRACT SCOPE TO REMOVE ALL PRIOR TENANT IMPROVEMENTS THAT ARE NOT SPECIFICALLY CALLED OUT IN THESE DRAWINGS TO BE REUSED, AND PATCH BACK TO THE ORIGINAL ADJACENT FLUSH FINISH CONDITIONS WHETHER KEY NOTED SPECIFICALLY OR NOT.

ROOF KEYNOTES

01 NEW ROOF TOP HVAC UNIT IN EXISTING LOCATION. SEE MECH DRAWINGS.
02 NEW ROOF HATCH AND LADDER. RE: A8.2 FOR DETAILS.
03 EXISTING PARAPET W/ ALUMINUM COPING/DRIP EDGE TYPICAL
04 NEW EXHAUST FAN AND CURB. RE: DETAIL THIS SHEET.
05 NOT USED
06 NEW COMBINATION/FLUE OUTSIDE AIR INTAKE FOR UNIT HEATER. RE: MECHANICAL
07 ALL GAS PIPING TO BE PREPPED AND PAINTED YELLOW. RE: P2.0.
08 VENT RISER, RE: DETAILS THIS SHEET, PLUMBING PLANS.
09 REMOVE ROOF EQUIPMENT INCLUDING CURBS. INFILL METAL DECK, INSULATION, AND ROOFING MEMBRANE TO MATCH EXISTING CONSTRUCTION.
10 EXISTING ALUMINUM GUTTER SYSTEM, NO CHANGE.

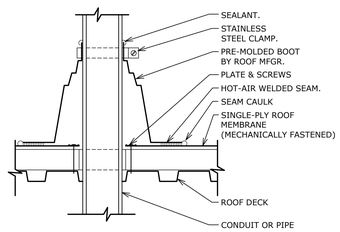

2 VENT PIPE DETAIL SCALE: 1" = 1'-0"

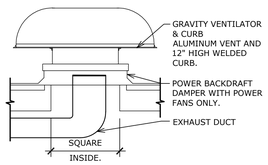

3 EXHAUST HOOD DETAIL SCALE: 1" = 1'-0"

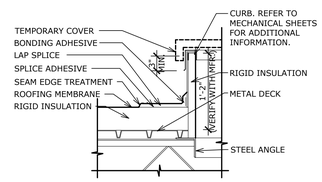

4 CURB DETAIL SCALE: 1" = 1'-0"

CERTIFICATION:

CT

CAMBURAS & THEODORE, LTD
ARCHITECTURE | ENGINEERING | INTERIORS
2454 E. Dempster St. Suite 202
Des Plaines, IL 60016
P (847)298-1525 | F (847)390-8130
www.camburasandtheodore.com

THESE DRAWINGS AND SPECIFICATIONS, AS INSTRUMENTS OF SERVICE, ARE AND SHALL REMAIN THE PROPERTY OF THE ARCHITECT WHETHER THE PROJECT FOR WHICH THEY ARE MADE IS EXECUTED OR NOT. THESE DRAWINGS AND SPECIFICATIONS SHALL NOT BE USED BY ANY PERSON OR ENTITY ON OTHER PROJECTS, FOR ADDITIONS TO THIS PROJECT, OR COMPLETION OF THIS PROJECT-WHEN PHASED-WITHOUT THE WRITTEN CONSENT OF C + T. LTD. Copyright © 2025

BOB'S Discount Furniture.

COBB PLACE SHOPPING CENTER
840 ERNEST W BARRETT PARKWAY NW, SUITE 250
KENNESAW, GA 30144

REVISION DATES

NO.	DATE	TYPE

ISSUE DATES

TYPE	DATE
PERMIT/CONSTRUCTION SET	05/01/26

DRAWN BY
CHECKED BY
PROJECT NUMBER 25-91018
DATE 05/01/2026
SHEET TITLE ROOF PLAN
SHEET NUMBER A3.0

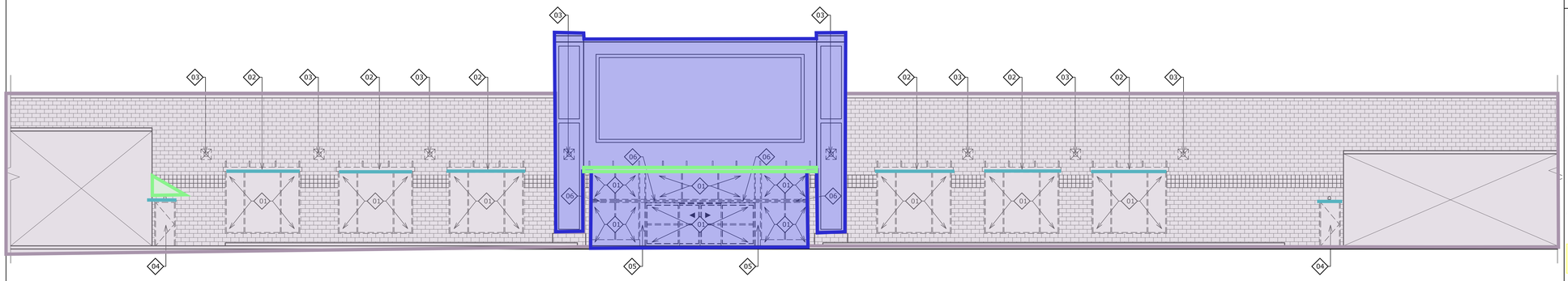

1 FRONT ELEVATION DEMOLITION

SCALE: ⅛" = 1'-0"

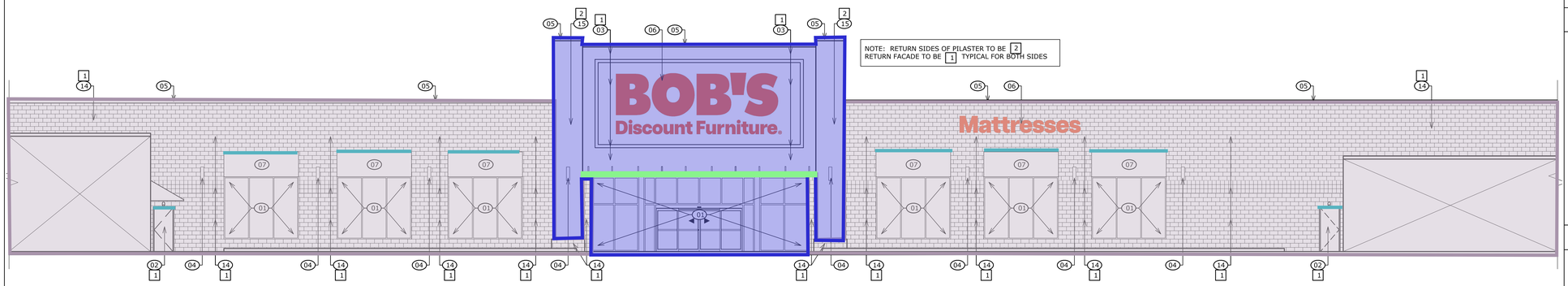

2 FRONT ELEVATION NEW

SCALE: ⅛" = 1'-0"

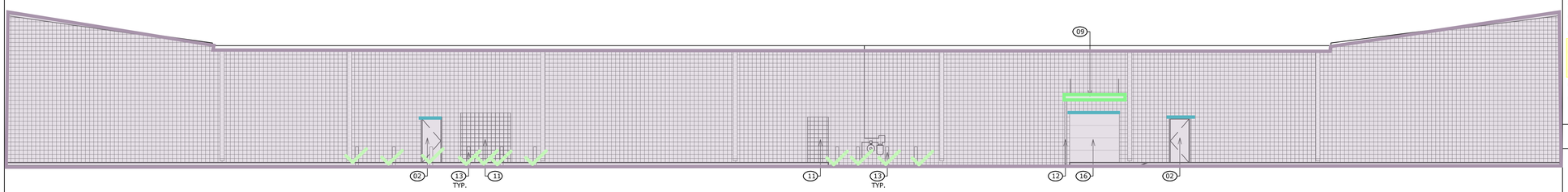

3 REAR ELEVATION NEW

SCALE: ⅛" = 1'-0"

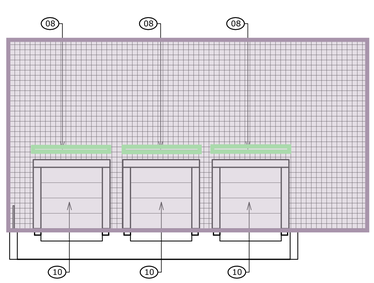

4 TRUCK DOCK ELEVATION NEW

SCALE: ⅛" = 1'-0"

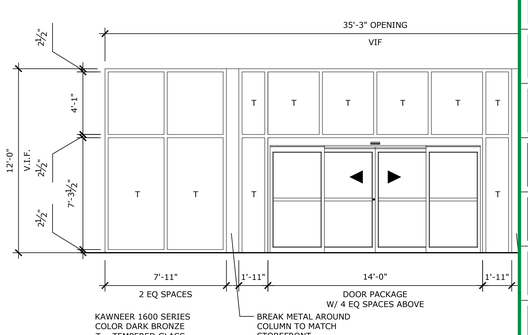

5 ENLARGED GLAZING AND ENTRY DOORS

SCALE: ¼" = 1'-0"

6 ENLARGED GLAZING

7 TYPICAL SECTION @ WINDOW

SCALE: ½" = 1'-0"

Legend

Bollards	11 EA
Canopy	79.44 SF
Exterior Painting - CMU Wall	16,218.94 SF
Exterior Painting-EIFS - ALT	3,053.04 SF
Lift	1 EA
Lintels	179.24 LF
Mobilization	1 EA

GENERAL NOTES

1. INSTALL CONTINUOUS SEALANT BEAD BETWEEN ALL UNLIKE MATERIALS.
2. PROVIDE SAFETY GLAZING AT DOORS, TRANSOM, SIDELITES, AND GLAZING 2'-0" ABOVE FIN GRADE. WINDOWS AND DOORS TO BE LABELED CONFORMING TO AAMA/NWDA 101/I.S.2.
3. ALL DENS-GLASS GOLD GYPSUM SHEETING TO BE TAPED. ALL GYPSUM BOARD TO BE TAPED AND SANDED SMOOTH.
4. ALL WOOD BLOCKING AND PLYWOOD SHEATHING USED IS TO BE FIRE-TREATED / FIRE RETARDANT.
5. AT BASE OF ALL EX. MASONRY & SPLIT FACE CMU WALLS, PROVIDE ROPE WEEPS @ 24" O.C. (EXTEND ROPE WEEPS AS HIGH AS POSSIBLE ABOVE TOP OF FOUNDATION/GRADE/WALK) PROVIDE WASCO FLASHING @ BASE UP 8" MIN. EXTEND FLASHING 1/4" BEYOND NEW WALLS. PAINT FLASHING TO MATCH EX. SPLIT FACE CMU.
6. EXTERIOR SIGNS ARE SHOWN FOR REFERENCE ONLY AND ARE OMITTED FROM THE BUILDING PERMIT. ALL SIGNAGE WILL SUBMITTED UNDER A SEPARATE SIGNAGE PERMIT SUBMISSION. A SEPARATE PERMIT MUST BE OBTAINED FOR ALL EXTERIOR SIGNAGE. TYPICAL.
7. PROVIDE FIRE TREATED PLYWOOD BEHIND BUILDING SIGNS IF APPLICABLE. GC TO VERIFY EXACT LOCATIONS
8. ALL PROPOSED FINISHES SHALL BE APPLIED ON PREPARED SURFACES PER MANUFACTURER'S INSTALLATION SPECIFICATIONS. SAME APPLIES TO INSTALLATION OF MATERIALS. VERIFY MINIMUM TEMPERATURE REQUIREMENTS FOR APPLICATION.
9. ALL CURTAIN WALLS, STOREFRONT GLAZING, AND ENTRANCE DOORS WILL BE TESTED FOR AIR LEAKAGE AT 1.57 POUNDS PER SQUARE FOOT IN ACCORDANCE WITH ASTM E283. A COPY OF THE TEST SHALL BE PRESENTED TO THE BUILDING OFFICIAL AT THE TIME OF INSPECTIONS.
10. PROVIDE BOLLARD PROTECTION AROUND ALL EXTERIOR REAR UTILITY/EQUIPMENT FOR PROTECTION AND PAINT SAFETY YELLOW, TWO COATS. REFER TO ARCHITECTURAL & STRUCTURAL FOR ADDITIONAL BOLLARD LOCATIONS.
11. EIFS FINISH SHOWN ON ELEVATIONS SHALL BE SAND TEXTURE AND 'DRYVIT' OR ARCH. APPVD. EQ.
12. COLD WEATHER CONSTRUCTION: FOR TEMPERATURES UNDER 40° GC TO PROVIDE TEMPORARY HEAT AND PLASTIC BARRIER TO MAINTAIN TEMPERATURE OVER 40°. ALL PRODUCTS TO BE INSTALLED PER MANUFACTURES REQUIREMENTS.
13. EXISTING FINISHES TO BE CLEANED/PRESSURE WASHED TO LIKE NEW CONDITION

DEMO KEYED NOTES

01. EXISTING EXTERIOR GLASS DOORS, STOREFRONT FRAMING AND GLAZING TO BE REMOVED.
02. REMOVE EXISTING METAL CANOPY AND TIEBACKS. REPAIR/REPLACE EXISTING CMU AS REQUIRED.
03. REMOVE EXISTING LIGHT SCONCE OR WALL LIGHT. REPAIR/REPLACE EXISTING C REQUIRED.
04. REMOVE AND REPLACE EXISTING EXTERIOR DOOR.
05. REMOVE AND REPLACE EXISTING BREAK METAL AROUND EXISTING COLUMNS.
06. REMOVE EXISTING BREAK METAL AND HORIZONTAL TUBE STEEL.

KEYED NOTES

01. NEW SLIDING DOOR PACKAGE AND/OR STOREFRONT GLAZING.
02. NEW EXTERIOR DOOR TO BE PAINTED TO MATCH ADJACENT COLOR
03. NEW EIFS SCRATCH COAT AT SIGN BAND.
04. NEW EXTERIOR LIGHT SCONCE RE: ELECTRICAL
05. EXISTING COPING TO REMAIN
06. NEW "BOB'S DISCOUNT FURNITURE" AND "MATTRESSES" SIGNAGE TO BE PERMITTED SEPARATELY.
07. NEW 4'-0"H x 4"D BLACK SUNBRELLA FABRIC AWNING OVER 1"x1" BLACK POWDER COATED ALUM. FRAME. DO NOT INSTALL TO THE STOREFRONT SYSTEM/GLAZING MULLIONS.
08. NEW METAL BROW AWNING FROM 4 FRONT ENGINEERED SOLUTIONS OVER TRUCK DOCK TO BE PAINTED BLACK. PROJECTION TO BE 1'-6" - 2'-0" OFF WALL.
09. NEW METAL CANOPY PREFINISHED BLACK MAPES SUPER LUMIDECK WITH TIE BACKS AND DOWNSPOUTS. CANOPY 8' WIDE x 4' DEEP, 10'-0" A.F.F.
10. NEW OVERHEAD DOOR, DOCK LEVELER, SEAL AND BUMPERS.
11. INFILL WITH CMU TO MATCH EXISTING. TOOTH IN CMU AS REQUIRED.
12. NEW DOWNSPOUT SUPPLIED BY CANOPY MANUFACTURER TO SPLASH ON GRADE, COLOR: TO MATCH WALL.
13. NEW OR EXISTING PIPE BOLLARDS, PAINTED YELLOW. RE: STRUCTURAL FOR MORE INFO.
14. PREPARE EXISTING CMU FOR NEW PAINT COLOR
15. INFILL REVEALS ON PILASTERS ON ALL SIDES.
16. NEW OVERHEAD DOOR

PAINT COLORS

1. MATCH EXISTING LIGHT GREY COLOR (WORLD MARKET SIGN FACADE)
2. MATCH EXISTING MEDIUM GREY COLOR (WALL COLOR OF WORLD MARKET)

NOTE: VERIFY ALL IN-LINE COLOR WITH BOB'S DISCOUNT FURNITURE.

TYPICAL EXTERIOR CAULK COLORS		
-	EGGSHELL CREAM	SIKAFLEX - 2C POLYURETHANE
-	DARK BRONZE	SIKAFLEX - 2C POLYURETHANE

MATERIAL REQUIREMENTS

- CONTRACTOR TO CONFIRM MINIMUM INTERNATIONAL ENERGY CONSERVATION CODE REQUIREMENTS ARE MET. COPIES OF LABELS INDICATING COMPLIANCE MUST BE SUBMITTED TO LOCAL AUTHORITY. MATERIALS SHALL MEET MINIMUM REQUIREMENTS AS OUTLINED BELOW IN INTERNATIONAL ENERGY CODE TABLE C402.4.

INTERNATIONAL ENERGY CODE TABLES C402.1.3 & C402.1.4
ENVELOPE MATERIALS - MINIMUM THERMAL RESISTANCE PROPERTIES

COMPONENT:	ASSEMBLY:	R	U	F	REMARK
ROOF ABOVE DECK	POLYISOCYANURATE R25 CI	25	.039	-	1,2
MASS WALL (ABOVE)	R-7.6 CONTINUOUS INSULATION	7.6	.123	-	1,2
METAL FRAMED WALL (ABOVE)	R-13.0 BATT + R-6.5 CONTINUOUS INSULATION	19.5	.079	-	1,2
BELOW GRADE WALL	NR	-	-	-	
UNHEATED SLAB	NR	-	-	-	
OPAQUE DOOR SWING	INSULATED HOLLOW METAL DOORS	-	.61	-	1,2
OPAQUE DOOR NON-SWING	INSULATED SECTIONAL OR COILING DOORS	-	.61	-	1,2

INTERNATIONAL ENERGY CODE TABLE C402.4 REQUIREMENTS
MAXIMUM U-FACTOR AND SHGC REQUIREMENTS

VERTICAL FENESTRATION	U-FACTOR		NOTE	REMARK
FIXED FENESTRATION	0.46		1,2,3	
OPERABLE FENESTRATION	0.60		1,2,3	
ENTRANCE DOORS	0.77		1,2,3	

NOTES:
1. IECC VALUES ABOVE ARE REQUIREMENTS FOR ALL NEW BUILDING COMPONENTS.
2. ALL PRODUCTS/MATERIALS INSTALLED IN THE FIELD SHALL BE LABELED AND CERTIFIED TO VERIFY THESE RATINGS AND LABELED AS SUCH BY THE MANUFACTURER.
3. ALL FENESTRATION SYSTEMS SHALL HAVE PRODUCT TESTED IN ACCORDANCE WITH THE REQUIRED TEST PROCEDURES NOTED ABOVE AND SHALL BE LABELED BY THE MANUFACTURER.

CERTIFICATION:

CT

CAMBURAS & THEODORE, LTD
ARCHITECTURE | ENGINEERING | INTERIORS
2454 E. Dempster St. Suite 202
Des Plaines, IL 60016
P (847)298-1525 | F (847)390-8130
www.camburasandtheodore.com

THESE DRAWINGS AND SPECIFICATIONS, AS INSTRUMENTS OF SERVICE, ARE AND SHALL REMAIN THE PROPERTY OF THE ARCHITECT WHETHER THE PROJECT FOR WHICH THEY ARE MADE IS EXECUTED OR NOT. THESE DRAWINGS AND SPECIFICATIONS SHALL NOT BE USED BY ANY PERSON OR ENTITY ON OTHER PROJECTS, FOR ADDITIONS TO THIS PROJECT, OR COMPLETION OF THIS PROJECT-WHEN PHASED-WITHOUT THE WRITTEN CONSENT OF C + T, LTD. Copyright © 2025

BOB'S Discount Furniture.
COBB PLACE SHOPPING CENTER
840 ERNEST W BARRETT PARKWAY NW, SUITE 250
KENNESAW, GA 30144

REVISION DATES

NO.	DATE	TYPE

ISSUE DATES

TYPE	DATE
PERMIT/CONSTRUCTION SET	05/01/26

DRAWN BY
CHECKED BY

PROJECT NUMBER
25-91018

DATE
05/01/2026

SHEET TITLE
ELEVATIONS

SHEET NUMBER
A4.0

DOOR SCHEDULE

E = EXISTING DOOR COORDINATE DOOR HARDWARE VIF

EXIST DOOR	NO.	TYPICAL LOCATION	TYPICAL DOOR SIZE W	H	T	TYPE	MATERIAL	VISION LITE	LABEL	FRAME MAT'L.	HARDWARE SET	HARDWARE KEY	REMARKS
	001A	VESTIBULE	14'-0"	7'-6"		8	ALUM. & 1" INSULATED GLASS	Y	---	ALUM.	**	Y	ASSA ABLOY AUTOMATIC (SL500) SLIDING DOOR SYSTEM WITH FULL BREAKOUT EGRESS SYSTEM. **INSTALL EXTERIOR VESTIBULE HARDWARE AND LOCKSET PER MANF. RECOMMENDATIONS.
	001B	VESTIBULE	14'-0"	7'-6"		8	ALUM. & GLASS	Y	---	ALUM.	**	Y	ASSA ABLOY AUTOMATIC (SL500) SLIDING DOOR SYSTEM WITH FULL BREAKOUT EGRESS SYSTEM. **INSTALL INTERIOR VESTIBULE HARDWARE AND LOCKSET PER MANF. RECOMMENDATIONS.
	002	DINING	3'-0"	7'-0"	1-3/4"	3	HM-ST		***	HM	6A	Y	
	004A	BEDROOMS	3'-0"	7'-0"	1-3/4"	3	HM-ST		---	HM	6A	Y	
	004B	BEDROOMS	3'-0"	7'-0"	1-3/4"	3	HM-ST		---	HM	6A	Y	4" TOP FRAME
	005	KIDS	3'-0"	7'-0"	1-3/4"	3	HM-ST		***	HM	6A	Y	4" TOP FRAME
	008	MANAGER/COUNT	3'-0"	7'-0"	1-3/4"	2	S.C. WOOD W/ GLASS	Y	---	HM	1A	Y	TRILOGY T2 LOCKSET
	009	BREAKROOM	3'-6"	7'-0"	1-3/4"	2	S.C. WOOD W/ GLASS	Y	---	HM	3		
	010	DATA	3'-0"	7'-0"	1-3/4"	1	S.C. WOOD		---	HM	2A	Y	
	013	UNISEX	3'-0"	7'-0"	1-3/4"	1	S.C. WOOD		---	HM	4	Y	UNDERCUT DOOR 1"
	014	UNISEX	3'-0"	7'-0"	1-3/4"	1	S.C. WOOD		---	HM	4	Y	UNDERCUT DOOR 1"
	015	JANITOR	3'-0"	7'-0"	1-3/4"	1	S.C. WOOD		---	HM	2A	Y	UNDERCUT DOOR 1"
	016A	RECEIVING	(2)3'-0"	7'-0"	1-3/4"	5	*	Y	---	MFG			*ELIASON DOORS. MODEL P-11 PLUS, COLOR: GREY. DOUBLE-ACTING PUSH HARDWARE - NO LOCKSET INSTALL S.S. KICK PLATE FROM FLOOR TO UNDERSIDE OF VISION LITE. 2" FRAME ON TOP. ORDER DOOR WITH JAMB GUARDS. -PROVIDE SIGNAGE "NOT AN EXIT" - OR AS DIRECTED BY FIRE OFFICIAL.
	016B	CUSTOMER PICKUP	8'-0" VIF	8'-0" VIF	---	6	*	Y	---	---	---		WAYNE DALTON THERMOSPAN 150 INSULATED SECTION OVERHEAD WITH VISION LITE AND 25,000 CYCLE SPRING NO POWER OPENER WITH SINGLE VISION LITE, STEP DOWN BRACKET, AND SLIDE BOLT WITH HOLE FOR PAD LOCK.
	016C	REVEIVING	3'-0"	7'-0"	1-3/4"	3	HM-ST		***	HM	6A	Y	4" TOP FRAME
	016D	LOADING/UNPACKING	8'-0" VIF	8'-0" VIF	---	6	*	Y	---	---	---		WAYNE DALTON THERMOSPAN 150 INSULATED SECTION OVERHEAD WITH VISION LITE AND 25,000 CYCLE SPRING NO POWER OPENER WITH SINGLE VISION LITE, STEP DOWN BRACKET, AND SLIDE BOLT WITH HOLE FOR PAD LOCK.
	016E	LOADING/UNPACKING	8'-0" VIF	8'-0" VIF	---	6	*	Y	---	---	---		WAYNE DALTON THERMOSPAN 150 INSULATED SECTION OVERHEAD WITH VISION LITE AND 25,000 CYCLE SPRING NO POWER OPENER WITH SINGLE VISION LITE, STEP DOWN BRACKET, AND SLIDE BOLT WITH HOLE FOR PAD LOCK.
	016F	LOADING/UNPACKING	8'-0" VIF	8'-0" VIF	---	6	*	Y	---	---	---		WAYNE DALTON THERMOSPAN 150 INSULATED SECTION OVERHEAD WITH VISION LITE AND 25,000 CYCLE SPRING NO POWER OPENER WITH SINGLE VISION LITE, STEP DOWN BRACKET, AND SLIDE BOLT WITH HOLE FOR PAD LOCK.
	017	SPRINKLER ROOM	3'-0"	7'-0"	1-3/4"	1	S.C. WOOD		---	HM	2A	Y	

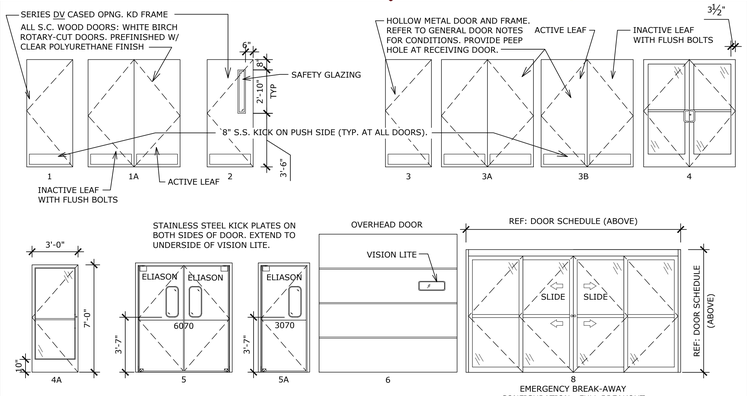

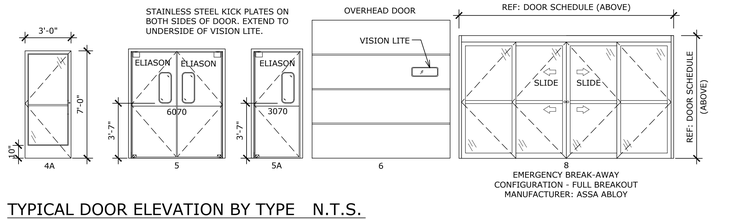

TYPICAL DOOR ELEVATION BY TYPE N.T.S.

DOOR GENERAL NOTES

1. EXIT DOORS USED IN PAIRS SHALL BE EQUIPPED WITH AUTOMATIC FLUSH BOLTS. MANUALLY OPERATED EDGE BOLTS OR MANUAL SURFACE MOUNTED BOLTS ARE PROHIBITED. THE DOOR LEAF HAVING THE AUTOMATIC FLUSH BOLTS SHALL HAVE NO HARDWARE ON THE EXTERIOR FACE. THE UNLATCHING OF ANY LEAF SHALL NOT REQUIRE MORE THAN ONE OPERATION AND AT LEAST ONE OF THE DOORS SHALL PROVIDE A CLEAR AND UNOBSTRUCTED OPENING OF 32".
2. THE FLOOR OR LANDING SHALL NOT BE MORE THAN 1/2" LOWER THAN THE TOP OF THE THRESHOLD OF THE DOOR. CHANGE IN LEVEL BETWEEN 1/4" AND 1/2" SHALL BE BEVELED WITH A GRADIENT NO GREATER THAN 1:2.
3. TYPICAL FOR ALL INTERIOR WOOD ELEMENTS, ALL COMPOSITE WOOD SUBSTRATES SHALL BE "NO ADDED UREA FORMALDEHYDE (NAUF) FOR ALL WOOD INSIDE THE WATERPROOF MEMBRANE OF THE BUILDING.
4. ALL EXTERIOR STEEL DOOR FRAMES SHALL BE WELDED. ALL INTERIOR DOOR FRAMES SHALL BE (KD) KNOCKDOWN.
5. EXTERIOR METAL DOORS SHALL HAVE PANIC BARS FOR EGRESS AND INTERIOR DOOR HANDLE ONLY FOR SECURING THE DOOR (PULLING IT CLOSED).
6. ALL EXISTING METAL DOORS & DOOR FRAMES TO BE REPLACED (UNO).

SLIDING DOOR NOTES

NOTES
1. ELECTRICAL REQUIREMENTS: BY ELECTRICAL CONTRACTOR
- 120 VAC, 15/20 AMP MIN TO POWER OPERATOR
- CONTROL CIRCUIT FROM SECURE ACTIVATION TO OPERATOR
2. ROUGH OPENING SHALL PROVIDE 1/4"[6] SHIM SPACE ON SIDES AND TOP OF PACKAGE.
3. LIMITS OF ACTIVATION AND SAFETY ZONES ARE FOR REFERENCE ONLY; SEE ANSI/BHMA A156.10 FOR DETAILED REQUIREMENTS.
4. SEE MANUFACTURER SPECIFICATIONS FOR ADDITIONAL INFORMATION.

HARDWARE SCHEDULE

HARDWARE SET #1 - INTERIOR WOOD SINGLE DOOR (MANAGERS/COUNT ROOM, OFFICE)- ENTRANCE FUNCTION (each opening to receive):

QTY	PART	MANUFACTURER	PART #	FINISH	SPECIAL INSTRUCTIONS
3 EA	HINGES:	MCKINNEY	MPB79 (US26D) 4.5" X 4.5"	626 (Satin Chromium), US26D	3 HINGES PER DOOR.
1 EA (VERIFY-SEE SPECIAL INSTRUCTIONS)	LOCKSET (OPTION - 1A):	ALARM LOCK SYSTEMS	TRILOGY T2 - DL2700IC/26D	626 (Satin Chromium), US26D	**MANAGERS/COUNT ROOM ONLY.** TRILOGY LOCKSET. CONTRACTOR IS TO INSTALL WITH A RED COLORED TEMPORARY INSTA-KEY 7-PIN REMOVABLE CORE AND CORE CHANGING KEY.
1 EA (VERIFY-SEE SPECIAL INSTRUCTIONS)	LOCKSET (OPTION - 1B):	ACCENTRA (YALE)	B-PB5407LN-626	626 (Satin Chromium), US26D	**OFFICE ONLY**; ENTRANCE FUNCTION - WITH A RED COLORED TEMPORARY INSTA-KEY 7-PIN REMOVABLE CORE AND CORE CHANGING KEY
1 EA	IC CORE	INSTAKEY	SFIC CORE 7 PIN		RED COLORED
1 EA	CLOSER:	CORBIN-RUSSWIN (CR)	(CR) DC6200	689 (Painted Silver)	FASTEN CLOSER BODY TO DOOR ON SWING SIDE OF DOOR WITH WOOD SCREWS (NO SEX BOLTS OR PARALEL BAR) AND JUST TO NO MORE THAN 12 LBS PULL RESISTANCE (EASY OPENING AND SOFT CLOSING).
1 EA	KICKPLATE:	ASSA ABLOY-ROCKWOOD	K1050 US32D 12 34 BEV	630 (Satin SS), US32D	ATTACHED TO THE PUSH SIDE OF THE DOOR 1/2" ABOVE THE BOTTOM, AND IN 1" FROM BOTH RIGHT AND LEFT EDGES THE DOOR.
1 EA	WALL STOP:	ASSA ABLOY-ROCKWOOD	400	626 (Satin Chromium), US26D	BEHIND DRYWALL AT DOOR BUMPER INSTALL 2X10 SOLID WOOD BACKING ADEQUETLY SECURED INTO THE WALL
1 EA	VISION LITE:	NATIONAL GUARD PRODUCTS (NGP)	L-FRA100-WG-G118 6x36 TAN	TAN - THEN FIELD PAINT WITH RUST-OLEAN SPRAY PAINT #7271830 - "SILVER	MOUNTED ON THE LATCH SIDE OF THE DOOR, SUPPLY AND INSTALL 1/4" CLEAR WIRE GLASS AND USE GLAZING TAPE TO PROTECT GLASS IN THE FRAME.
1 SET	SMOKE SEAL:	ASSA ABLOY -PEMKO	HSS2000xSBBL	BLACK (BL)	INSTALL AFTER FRAME IS PAINTED

HARDWARE SET #2 - INTERIOR WOOD SINGLE DOOR (DATA, ELECTRICAL, RISER, JANITORS, STORAGE) - STORE ROOM FUNCTION HARDWARE (each opening to receive):

QTY	PART	MANUFACTURER	PART #	FINISH	SPECIAL INSTRUCTIONS
3 EA	HINGES:	MCKINNEY	MPB79 (US26D) 4.5" X 4.5"	626 (Satin Chromium), US26D	3 HINGES PER DOOR
1 EA (VERIFY - SEE SPECIAL INSTRUCTIONS)	LOCKSET (OPTION - 2A:	ASSA ABLOY ACCENTRA (YALE)	B-PB5405LN-626	626 (Satin Chromium), US26D	STORE ROOM FUNCTION - WITH A RED COLORED TEMPORARY INSTA-KEY 7-PIN REMOVABLE CORE AND CORE CHANGING KEY
1 EA (VERIFY - SEE SPECIAL INSTRUCTIONS)	EXIT DEVICE OPTION - 2B:	ALLEGION - VON DUPRIN WITH SEPARATE INSTAKEY CORE CYLINDER	22-L x 230L-06-SP28-3'	SP28 (Aluminum Paint)	** **WHERE REQUIRED BY CITY AT INTERIOR ELECTRICAL ROOM DOOR ONLY**** CONTRACTOR TO SUPPLY/INSTALL A RED COLORED TEMPORARY INSTA-KEY 7-PIN REMOVABLE COREAND CORE CHANGING KEY IN THE LEVER SIDE OF THE DOOR.
1 EA (VERIFY - SEE SPECIAL INSTRUCTIONS)	IC CORE	INSTAKEY	SFIC CORE 7 PIN	626 (Satin Chromium), US26D	****WHEN OPTION 2A & 2B - VON DUPRIN 22 PANIC DEVICE IS REQUIRED ONLY**** A RED COLORED TEMPORARY INSTA-KEY 7-PIN REMOVABLE CORE AND CORE CHANGING KEY AND CYLINDER RINGS STRAIGHT CAM.
1 EA	KICKPLATE:	ASSA ABLOY-ROCKWOOD	K1050 US32D 12 34 BEV	630 (Satin SS), US32D	ATTACHED TO THE PUSH SIDE OF THE DOOR 1/2" ABOVE THE BOTTOM, AND IN 1" FROM BOTH RIGHT AND LEFT EDGES THE DOOR.
1 EA	WALL STOP:	ASSA ABLOY-ROCKWOOD	400	626 (Satin Chromium), US26D	PROVIDE BACKING IN WALL.
3 EA	SILENCERS:	ASSA ABLOY-ROCKWOOD	608-RKW	GREY	INSTALL AFTER FRAME IS PAINTED

HARDWARE SET #3 - INTERIOR WOOD SINGLE DOOR (BREAKROOM (3'-6" wide door), MULTI-USER RESTROOM (3'-0" wide door) - PUSH-PULL HARDWARE (each opening to receive):

QTY	PART	MANUFACTURER	PART #	FINISH	SPECIAL INSTRUCTIONS
3 EA	HINGES:	MCKINNEY	MPB79 (US26D) 4.5" X 4.5"	626 (Satin Chromium), US26D	STANDARD DUTY BALL BEARING MORTISE HINGE
1 EA	PULL:	ASSA ABLOY-ROCKWOOD	107 X 70C	630 (Satin Stainless Steel), US32D	COUNTERSINK THE PULL BAR THROUGH BOLT SO PUSH PLATE ON THE OTHER SIDE OF DOOR COVERS OVER THE THROUGH BOLTS.
1 EA	PUSH:	ASSA ABLOY-ROCKWOOD	71C	630 (Satin Stainless Steel), US32D	MOUNT AFTER THE PULL IS INSTALLED TO COVER THE RECESSED PULL BAR THROUGH BOLTS.
1 EA	CLOSER:	CORBIN-RUSSWIN (CR)	(CR) DC6200	689 (Painted Silver)	FASTEN CLOSER BODY TO DOOR ON SWING SIDE OF DOOR WITH WOOD SCREWS (NO SEX BOLTS OR PARALEL BAR) AND JUST TO NO MORE THAN 12 LBS PULL RESISTANCE (EASY OPENING AND SOFT CLOSING).
1 EA (BREAKROOM ONLY)	VISION LITE:	NATIONAL GUARD PRODUCTS (NGP)	L-FRA100-WG-G118 6x36 TAN	TAN - THEN FIELD PAINT WITH RUST-OLEAN SPRAY PAINT #7271830 - "SILVER METALLIC"	**BREAKROOM ONLY**:** MOUNTED ON THE LATCH SIDE OF THE DOOR. SUPPLY AND INSTALL 1/4" CLEAR WIRE GLASS AND USE GLAZING TAPE TO PROTECT GLASS IN THE FRAME.
1 EA (VERIFY - SEE SPECIAL INSTRUCTIONS)	KICKPLATE:	ASSA ABLOY-ROCKWOOD	**(RESTROOMS)** K1050 US32D 12x34 BEV, **(BREAKROOM)** K1050 US32D 12x40 BEV	630 (Satin SS), US32D	ATTACHED TO THE PUSH SIDE OF THE DOOR 1/2" ABOVE THE BOTTOM, AND IN 1" FROM BOTH RIGHT AND LEFT EDGES THE DOOR. **BREAKROOM DOOR** IS A 3'-6" WIDE DOOR AND WILL GET A 40" WIDE KICK PLATE.**
1 EA	WALL STOP:	ASSA ABLOY-ROCKWOOD	400	626 (Satin Chromium), US26D	PROVIDE BACKING IN WALL.
3 EA	SILENCERS:	ASSA ABLOY-ROCKWOOD	608-RKW	GREY	INSTALL AFTER FRAME IS PAINTED

HARDWARE SET #4 - INTERIOR WOOD SINGLE DOOR (SINGLE OCCUPANT RESTROOM) - DORMITORY HARDWARE (each opening to receive):

QTY	PART	MANUFACTURER	PART #	FINISH	SPECIAL INSTRUCTIONS
3 EA	HINGES:	MCKINNEY	MPB79 (US26D) 4.5" X 4.5"	626 (Satin Chromium), US26D	STANDARD DUTY BALL BEARING MORTISE HINGE
1 EA	LOCKSET	ASSA ABLOY ACCENTRA (YALE)	B-PB5422LN-626	626 (Satin Chromium), US26D	**CORRIDOR FUNCTION;** WITH A RED COLORED TEMPORARY INSTA-KEY 7-PIN REMOVABLE CORE AND CORE CHANGING KEY.
1 EA	IC CORE	INSTAKEY	SFIC CORE 7 PIN		RED COLORED
1 EA	CLOSER:	CORBIN-RUSSWIN (CR)	(CR) DC6200	689 (Painted Silver)	FASTEN CLOSER BODY TO DOOR ON SWING SIDE OF DOOR WITH WOOD SCREWS (NO SEX BOLTS OR PARALEL BAR) AND JUST TO NO MORE THAN 12 LBS PULL RESISTANCE (EASY OPENING AND SOFT CLOSING).
1 EA	KICKPLATE:	ASSA ABLOY-ROCKWOOD	K1050 US32D 12 34 BEV	630 (Satin SS), US32D	ATTACHED TO THE PUSH SIDE OF THE DOOR 1/2" ABOVE THE BOTTOM, AND IN 1" FROM BOTH RIGHT AND LEFT EDGES THE DOOR.
1 EA	FLOOR STOP:	ASSA ABLOY-ROCKWOOD	481H	626 (Satin Chromium), US26D	REQUIRED FOR THE 1" ABOVE FS UNDERCUT DOOR.
3 EA	SILENCERS:	ASSA ABLOY-ROCKWOOD	608-RKW	GREY	INSTALL AFTER FRAME IS PAINTED

HARDWARE SCHEDULE

HARDWARE SET #6 - EXTERIOR PERIMETER HM SINGLE DOOR - EGRESS ALARMED PANIC FUNCTION HARDWARE (each opening to receive):

QTY	PART	MANUFACTURER	PART #	FINISH	SPECIAL INSTRUCTIONS
1 EA	SECURITY ASTRIGAL:	ASSA ABLOY-PEMKO	3572NP7ND	PRIME PAINTED (FIELD PRIME AND PAINT WITH DOOR)	WELD THE SECURITY ASTRIGAL TO THE ACTIVE DOOR TAKING CARE TO ACCOMMODATE THE REMAINING DOOR HARDWARE (I.E. TRIM TO ALLOW SWEEP TO PASS UNDER ASTRIGAL).
3 EA	HINGES:	MCKINNEY	MPB91 4.5" X 4.5" NRP US32D	SATIN STAINLESS STEEL, US32D (verify with BDF)	STANDARD DUTY BALL BEARING MORTISE HINGE
1 EA	THRESHOLD:	ASSA ABLOY	175A	A-MILL ALUMINUM (Verify with BDF)	SET AND ANCHOR THRESHOLD IN A SOLID BED OF "DOWSIL" CONCRETE SEALANT (OR EQUAL).
1 EA	DOOR DRIP:	ASSA ABLOY-PEMKO	346C	C- CLEAR ANODIZED ALUMINUM (Field painted)	TO BE ORDERED 4" WIDER THAN THE OVERALL DOOR OPENING AND MOUNTED TO THE HM DOOR FRAME HEAD. PRIME AND PAINT TO MATCH EXTERIOR COLOR OF DOOR FRAME.
1 SET (VERIFY-SEE SPECIAL INSTRUCTIONS)	WEATHER-STRIPPING:	NATIONAL GUARD PRODUCTS	700N (CONTINUOUS HEAD AND BOTH LEGS)	MILL ALUMINUM	****INSTALL AFTER THRESHOLD IS INSTALLED AND DOOR IS HUNG, BUT BEFORE ALL OTHER DOOR HARDWARE.**** MOUNT TO HEAD AND BOTH DOOR FRAME LEGS. WEATHERSTRIP IS TO BE CONTINUOUS AND WITHOUT GAPS, DAYLIGHT, WEATHER, OR BUGS PASSING THROUGH. PANIC HARDWARE STRIKES, CLOSERS, BURGLAR CONTACTS, ETC. ARE TO MOUNT ON TOP OF THE WEATHERSTRIP SOLID ALUMINUM BAR BODY AFTER WEATHERSTRIP IS INSTALLED.
1 EA	KICKPLATE:	ASSA ABLOY-ROCKWOOD	K1050 US32D 12 34 BEV	630 (Satin SS), US32D	ATTACHED TO THE PUSH SIDE OF THE DOOR 1/2" ABOVE THE BOTTOM, AND IN 1" FROM BOTH RIGHT AND LEFT EDGES THE DOOR. INSTALL KICKPLATE AFTER DOOR IS PAINTED.
1 EA (VERIFY-SEE SPECIAL INSTRUCTIONS)	ALARMED EXIT DEVICE (OPTION -6A)	DETEX	ECL - 230X - IK7R - BG	GRAY	CONTRACTOR TO SUPPLY/INSTALL THE LOCKSET WITH A RED COLORED TEMPORARY INSTA-KEY 7-PIN REMOVABLE CORE AND CORE CHANGING KEY. BDF TO SUPPLY/INSPECT PERMANAENT CORES AFTER CONSTRUCTION COMPLETION DATE. INSTALL AFTER DOOR IS PAINTED.
1 EA (VERIFY-SEE SPECIAL INSTRUCTIONS)	ALARMED EXIT DEVICE (OPTION -6B)	DETEX	ECL - 230X -TDB X 84"(VERIFY) BG X IK7R	GRAY	****SUPPLY AT HIGH RISKS STORES ONLY.**** CONTRACTOR TO SUPPLY/INSTALL WITH A RED COLORED TEMPORARY INSTA-KEY 7-PIN REMOVABLE CORE AND CORE CHANGING KEY. BDF TO SUPPLY/INSERT PERMANAENT CORES AFTER CONSTRUCTION COMPLETION DATE. INSTALL AFTER DOOR IS PAINTED.
1 EA	IC CORE	INSTAKEY	SFIC CORE 7 PIN		OPTION 6A & 6B RED COLORED
1 EA	PULL	ASSA ABLOY-ROCKWOOD	102-RKW X TYPE 6R-HD MOUNTING	630 (Satin SS), US32D	****INSTALL ON INTERIOR SIDE ONLY.**** CONTRACTOR TO INSTALL THE PULL ON THE INTERIOR SIDE OF DOOR LEAF TO ALLOW STORE TEAMS TO PULL DOOR SHUT FORCEFULLY TO ENSURE FULL CONTACT AND PROPER LATCHING. INSTALL VERTICALLY 4" ABOVE THE DETEX DEVICE AND 4" FROM THE DOOR EDGE
1 EA (VERIFY-SEE SPECIAL INSTRUCTIONS)	EXTERIOR PULL TRIM	DETEX	03PP	626 (Satin Chromium), US26D	****ONLY IF EXTERIOR ACCESS IS REQUIRED BY FIRE MARSHALL ON A DETEX HARDWARE DOOR**** CONTRACTOR TO SUPPLY/INSTALL THE PULL TRIM AND CYLINDER WITH A GREEN COLORED TEMPORARY INSTA-KEY 7-PIN REMOVABLE CORE AND CORE CHANGING KEY.
1 EA (VERIFY-SEE SPECIAL INSTRUCTIONS)	EXTERIOR SFIC RIM CYLINDER	KILEEN	308-26D	626 (Satin Chromium), US26D	
1 EA	CLOSER:	CORBIN-RUSSWIN (CR)	(CR) DC6210 (PARALLEL ARM)	689 (Painted Silver)	MOUNT ON PUSH SIDE OF THE DOOR WITH PARALLEL ARM AND ADJUST TO NO MORE THAN 12 LBS PULL RESISTANCE, AND A SLOW AND SOFT CLOSING.
1 EA (VERIFY-SEE SPECIAL INSTRUCTIONS)	DOOR VIEWER:	ASSA ABLOY-ROCKWOOD	622DCRM	DCRM (Dull Chrome) (verify with BDF)	****ONLY ON THE DOOR ADJACENT TO A DOOR BELL**** INSTALL CENTER OF THE DOOR AT 5' AFF.
1 EA (VERIFY-SEE SPECIAL INSTRUCTIONS)	WALL STOP:	ASSA ABLOY-ROCKWOOD	400	626 (Satin Chromium), US26D (Verify with BDF)	****ONLY WHERE STOP CAN BE MOUNTED TO A SOLID WALL CONDITION**** THIS IS THE PREFERRED METHOD (UNLESS NO SOLID WALL WITH CONDITION) MOUNT ON SOLID BRICK, CMU OR CONCRETE WALL. IF SOLID WALL IS NOT AVAILIBLE THEN USE FLOOR STOP
1 EA (VERIFY-SEE SPECIAL INSTRUCTIONS)	FLOOR STOP:	ASSA ABLOY-ROCKWOOD	481H	626 (Satin Chromium), US26D (Verify with BDF)	****ONLY IF WALL MOUNT CONDITION IS NOT ON A SOLID WALL**** MOUNT AS CLOSE TO THE WALL AS POSSIBLE TO KEEP DOOR AND HARDWARE FROM HITTING THE WALL.
1 EA	SWEEP	ASSA ABLOY-PEMKO	3452CNB TKSP8	CLEAR ALUMINUM (Verify with BDF)	INSTALL AFTER DOOR IS PAINTED ON EXTERIOR.

Legend

Door Frame - HM	12 EA
Doors -HM	5 EA
Doors -WD	7 EA

ASSA ABLOY SL500 AUTOMATIC SLIDING DOOR

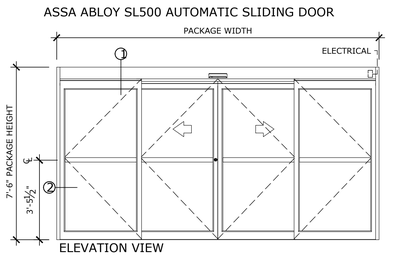

ELEVATION VIEW
SCALE: 3/8" = 1'-0"

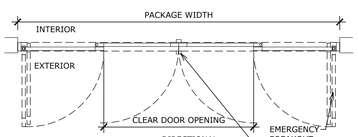

PLAN VIEW
SCALE: 3/8" = 1'-0"

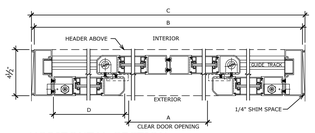

2 HORIZONTAL SECTION
SCALE: 2" = 1'-0"

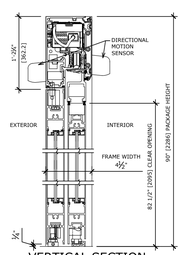

1 VERTICAL SECTION
SCALE: 2" = 1'-0"

SL500 OHC	DOOR OPENING A	OVERALL FRAME WIDTH B	MASONRY OPENING WIDTH C	ACTIVE & SIDELITE LEAF WIDTH D
OC2-8	36" (914.4)	96" (2438.4)	96 1/2" (2451.1)	24 3/8" (619.1)
OC2-10	48" (1219.2)	120" (3048)	120 1/2" (3060.7)	30 3/8" (771.5)
OC2-12	60" (1524)	144" (3657.6)	144 1/2" (3670.3)	36 3/8" (923.9)
OC2-14	72" (1828.8)	168" (4267.2)	168 1/2" (4279.9)	42 3/8" (1076.3)
OC2-16	84" (2133.6)	192" (4876.8)	192 1/2" (4889.5)	48 3/8" (1228.7)
KEY	(B/2)-12" (B/2)-(304.8)	(C-1/2") (C-12.7)	(B+1/2") (B+12.7)	(B/4)+3/8" (B/4)+(9.5)

NOTES:
1. CONTRACTOR DEVELOP MASTER KEYING SEQUENCE IN ACCORDANCE WITH OWNER'S REQUIREMENTS. PROVIDE KEYING SCHEDULE FOR REVIEW BY BOB'S FURNITURE.
2. ALL FINISH HARDWARE TO BE US26D/626 FINISH. U.N.O..
3. PROVIDE N.R.P. HINGES FOR ALL OUT-SWING EXTERIOR DOORS.
4. ALL INTERIOR WOOD DOORS SHALL BE SOLID CORE ROTARY CUT BIRCH. PRE-FINISHED W/CLEAR POLYURETHANE FINISH.
5. PROVIDE HANDICAP DOOR HARDWARE IN COMPLIANCE WITH THE ADA STANDARDS OF THE BUILDING CODE. TYPICAL.
6. ALL DOORS, INTERIOR AND EXTERIOR, TO HAVE 7-PIN CYLINDERS.
7. FOR INTO ROOM SWING DOORS - FASTEN CLOSER BODY TO DOOR ON PULL SIDE OF DOOR WITH WOOD SCREWS (NO SEX BOLTS) AND NO PARALLEL BAR. FOR OUT OF ROOM SWING DOORS (TYPICALLY JANITORS AND ELECTRIC) FASTEN CLOSER BODY TO DOOR ON PUSH SIDE OF DOOR WITH WOOD SCREWS (NO SEX BOLTS) WITH PARALLEL BAR. NO MORE THAN 12 LBS PULL RESISTANCE (EASY OPENING AND SOFT CLOSING).

CERTIFICATION:

CT

CAMBURAS & THEODORE, LTD
ARCHITECTURE | ENGINEERING | INTERIORS
2454 E. Dempster St. Suite 202
Des Plaines, IL 60016
P (847)298-1525 | F (847)390-8130
www.camburasandtheodore.com

THESE DRAWINGS AND SPECIFICATIONS, AS INSTRUMENTS OF SERVICE, ARE AND SHALL REMAIN THE PROPERTY OF THE ARCHITECT WHETHER THE PROJECT FOR WHICH THEY WERE MADE IS EXECUTED OR NOT. THESE DRAWINGS AND SPECIFICATIONS SHALL NOT BE USED BY ANY PERSON OR ENTITY ON OTHER PROJECTS, FOR ADDITIONS TO THIS PROJECT, OR COMPLETION OF THIS PROJECT WHEN PHASED WITHOUT THE WRITTEN CONSENT OF C + T, LTD. Copyright © 2025

BOB'S Discount Furniture.
COBB PLACE SHOPPING CENTER
840 ERNEST W BARRETT PARKWAY NW, SUITE 250
KENNESAW, GA 30144

REVISION DATES

NO.	DATE	TYPE

ISSUE DATES

TYPE	DATE
PERMIT/CONSTRUCTION SET	05/01/26

DRAWN BY
CHECKED BY
PROJECT NUMBER 25-91018
DATE 05/01/2026
SHEET TITLE
DOOR SCHEDULE & NOTES
SHEET NUMBER
A8.1

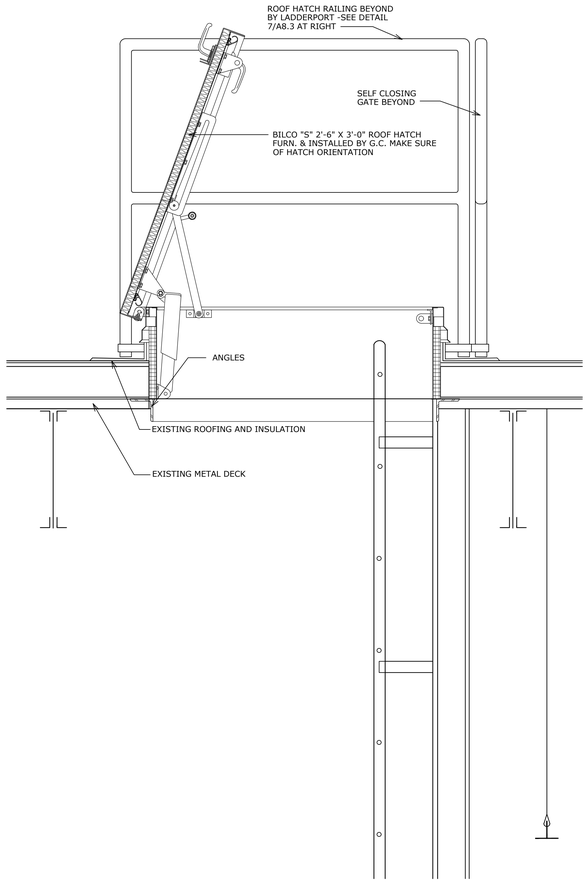

6 | ROOF HATCH DETAIL | SCALE: 1-1/2" = 1'-0"

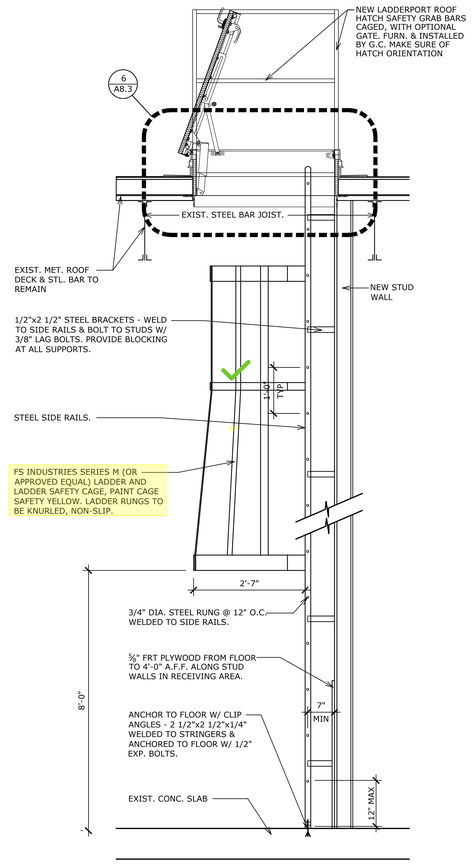

4 | ROOF LADDER SECTION | SCALE: 3/4" = 1'-0"

1 | NOT USED

2 | NOT USED | SCALE: 3" = 1'-0"

8 | NOT USED | SCALE: 3" = 1'-0"

Legend

☑ Ladder - H 24'	1 EA

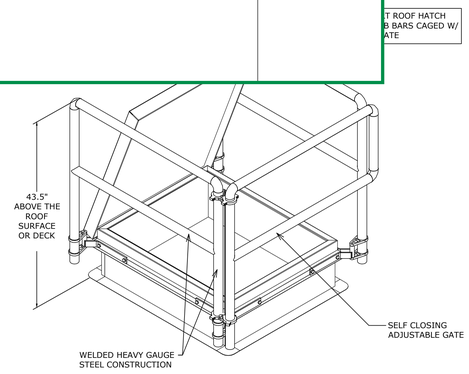

7 | ROOF HATCH RAILING DETAIL | SCALE: 1-1/2" = 1'-0"

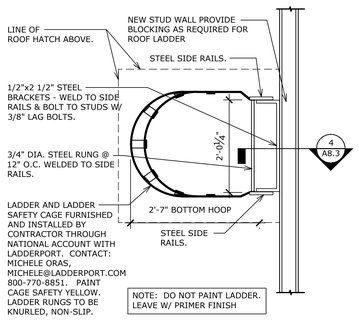

5 | ROOF LADDER DETAIL | SCALE: 3/4" = 1'-0"

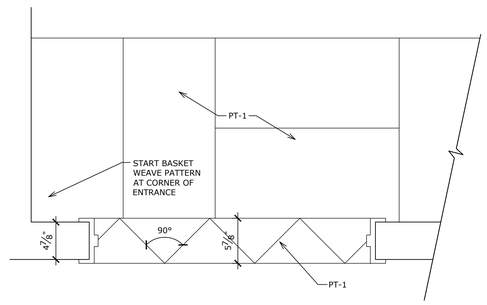

SCALE: 1 1/2" = 1'-0"

3 | TILE TERMINATION DETAIL @ RESTROOMS

9 | NOT USED | SCALE: 3" = 1'-0"

CERTIFICATION:

CT

CAMBURAS & THEODORE, LTD
ARCHITECTURE | ENGINEERING | INTERIORS
2454 E. Dempster St. Suite 202
Des Plaines, IL 60016
P (847)298-1525 | F (847)390-8130
www.camburasandtheodore.com

THESE DRAWINGS AND SPECIFICATIONS, AS INSTRUMENTS OF SERVICE, ARE AND SHALL REMAIN THE PROPERTY OF THE ARCHITECT WHETHER THE PROJECT FOR WHICH THEY ARE MADE IS EXECUTED OR NOT. THESE DRAWINGS AND SPECIFICATIONS SHALL NOT BE USED BY ANY PERSON OR ENTITY ON OTHER PROJECTS, FOR ADDITIONS TO THIS PROJECT, OR COMPLETION OF THIS PROJECT WHEN PHASED WITHOUT THE WRITTEN CONSENT OF C + T, LTD. Copyright © 2025

BOB'S Discount Furniture.
COBB PLACE SHOPPING CENTER
840 ERNEST W BARRETT PARKWAY NW, SUITE 250
KENNESAW, GA 30144

REVISION DATES

NO.	DATE	TYPE

ISSUE DATES

TYPE	DATE
PERMIT/CONSTRUCTION SET	05/01/26

DRAWN BY
CHECKED BY
PROJECT NUMBER 25-91018
DATE 05/01/2026
SHEET TITLE STANDARD DETAILS
SHEET NUMBER A8.3