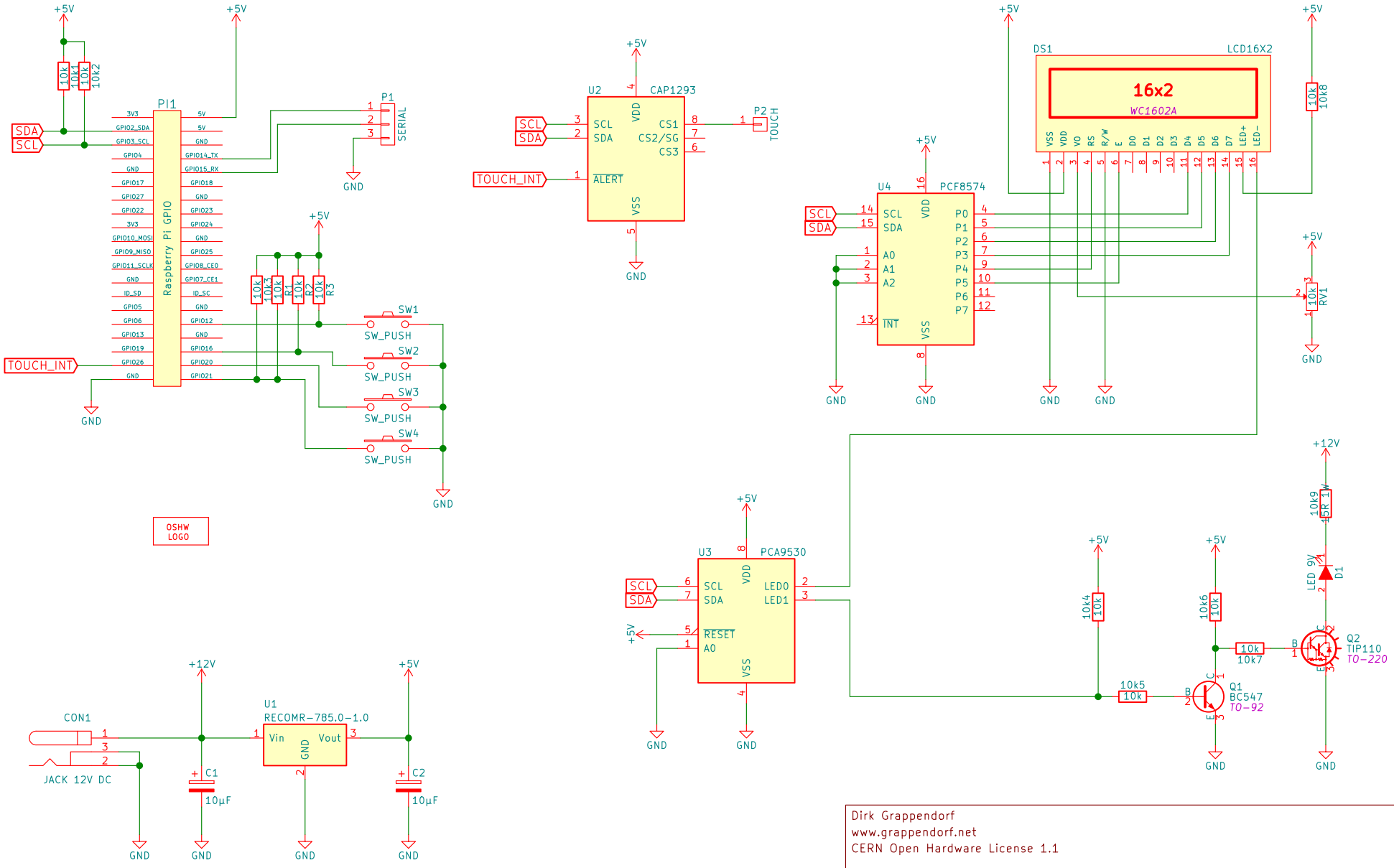

Dirk Grappendorf
www.grappendorf.net
CERN Open Hardware License 1.1

Sheet: /
File: sunrise-alarm-clock.sch

Title: Sunrise Alarm Clock

Size: A4	Date: 2017-01-29	Rev: 1
KiCad E.D.A. kicad 4.0.4-stable		Id: 1/1