ktunotes.in

GET IT ON Google Play

KTU
NOTES
The learning companion.

KTU STUDY MATERIALS | SYLLABUS | LIVE NOTIFICATIONS | SOLVED QUESTION PAPERS

Website: www.ktunotes.in

MODULE 1

FUNDAMENTALS OF CRYPTOGRAPHY

Syllabus

Introduction to Cryptography, Symmetric cryptography – AES.Asymmetric cryptography – RSA.Elliptic curve cryptography, Digital signatures – RSA digital signature algorithms. Secure Hash Algorithms – SHA-256. Applications of cryptographic hash functions – Merkle trees, Distributed hash tables.

Introduction to Cryptography

- Cryptography is the science of making information secure in the presence of adversaries.
- Ciphers are algorithms used to encrypt or decrypt data so that if intercepted by an adversary, the data is meaningless to them without decryption, which requires a secret key.
- The below diagram shows the model of generic encryption and decryption.
- In the below diagram, **P**, **E**, **C**, and **D** represent plaintext, encryption, cipher text, and decryption, respectively.

Ktunotes.in

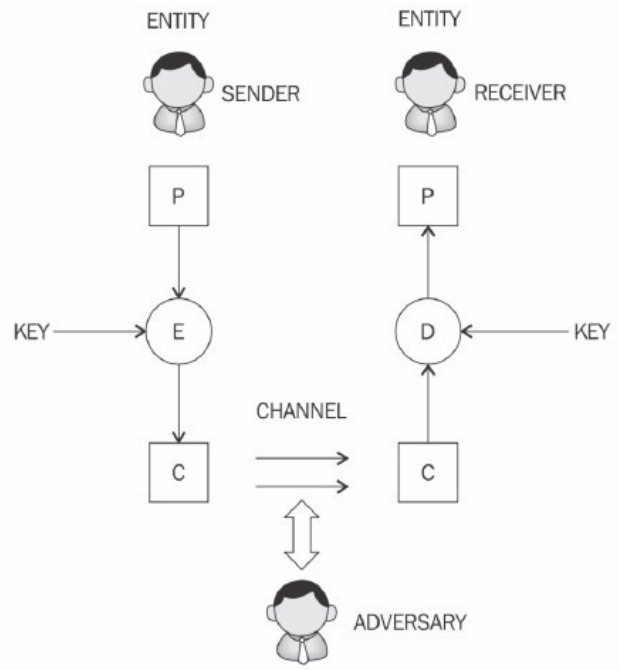

Fig: A model of the generic encryption and decryption model

Downloaded from Ktunotes.in

The services provided by cryptography are:

- **Confidentiality:** Confidentiality is the assurance that information is only available to authorized entities.
- **Integrity:** Integrity is the assurance that information is modifiable only by authorized entities.
- **Authentication:** Authentication provides assurance about the identity of an entity or the validity of a message.
  - There are two types of authentication mechanisms, namely, entity authentication and data origin authentication.
  - **Entity authentication** is the assurance that an entity is currently involved and active in a communication session. Traditionally, users are issued a username and password that is used to gain access to the various platforms with which they are working. This practice is known as **single-factor authentication.**
  - This type of authentication is not very secure for a variety of reasons, for example, password leakage; therefore, additional factors are now commonly used to provide better security. The use of additional techniques for user identification is known as **multi-factor authentication** (or two-factor authentication if only two methods are used).
  - **Data origin authentication:** Also known as **message authentication**, data origin authentication is an assurance that the source of the information is indeed verified. Various methods, such asMessage Authentication Codes (MACs) and digital signatures, are most commonly used.
- **Non-repudiation:** Non-repudiation is the assurance that an entity cannot deny a previous commitment or action by providing incontrovertible evidence. This is a security service that offers definitive proof that a particular activity has occurred.
- **Accountability:** Accountability is the assurance that actions affecting security can be traced back to the responsible party. This is usually provided by logging and audit mechanisms in systems where a detailed audit is required.

Ktunotes.in

Downloaded from Ktunotes.in

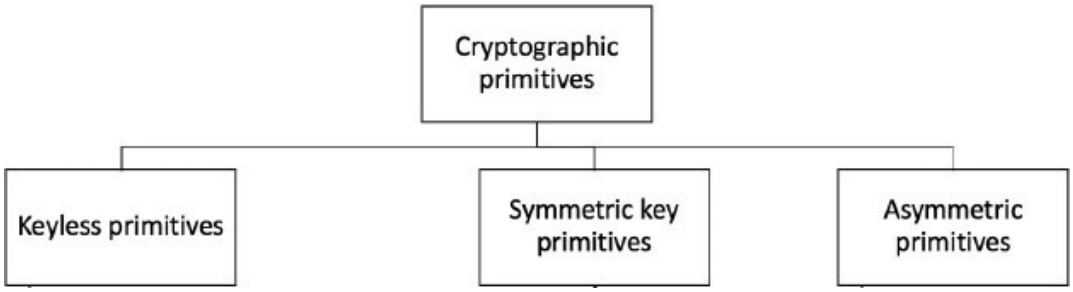

Symmetric Cryptography

- Refers to a type of cryptography where the key that is used to encrypt the data is the same one that is used for decrypting the data.
- Also known as **shared key cryptography** or **secret key cryptography**.
- Keys can also be **ephemeral** (temporary) or **static**. Ephemeral keys are intended to be used only for a short period of time, such as in a single session between the participants, whereas static keys are intended for long-term usage.
- Another type of key is called the **master key**, which is used for the protection, encryption, decryption, and generation of other keys.
- Examples: Data Encryption Standard (DES), Advanced Encryption Standard (AES)

Ktunotes.in

Advanced Encryption Standard (AES)

- Symmetric encryption algorithm.
- Invented by cryptographers Joan Daemen and Vincent Rijmen.
- So far, no attack has been found against AES that is more effective than the brute-force method.

How AES works?

- The encryption algorithm takes two inputs – the plaintext and key.
- AES takes the plaintext as blocks of size 128 bits (or 16 Bytes), and the key sizes of 128 bits, 192 bits or 256 bits.

Downloaded from Ktunotes.in

- This 16 bytes plaintext is processed as a 4 x 4 array of bytes, known as the **state.**
- The state is then modified using multiple rounds.
- Full encryption requires 10 to 14 rounds, depending on the size of the key.
- The following table shows the key sizes and the required number of rounds.

Key size	Number of rounds required
128-bit	10 rounds
192-bit	12 rounds
256-bit	14 rounds

- Once the state is initiated, the following four operations are performed.
  1. **AddRoundKey**: In this step, the state array is XORed with a **subkey** (also known as the **Round Key**), which is derived from the master key.
  2. **SubstituteBytes (or SubBytes)**: This is the substitution step where a lookup table (S-box) is used to replace all bytes of the state array.
  3. **ShiftRows**: This step is used to shift each row to the left, except for the first one, in the state array in a cyclic and incremental manner. That is, the first row of state is not altered. For the second row, a 1-byte circular left shift is performed. For the third row, a 2-byte circular left shift is performed. For the fourth row, a 3-byte circular left shift is performed.
  4. **MixColumns**: Finally, all bytes are mixed in a linear fashion (linear transformation), column-wise.
- This is one round of AES.
- In the final round (either the 10th, 12th, or 14^{th}round, depending on the key size), stage 4 is replaced with **AddRoundKey.**

Downloaded from Ktunotes.in

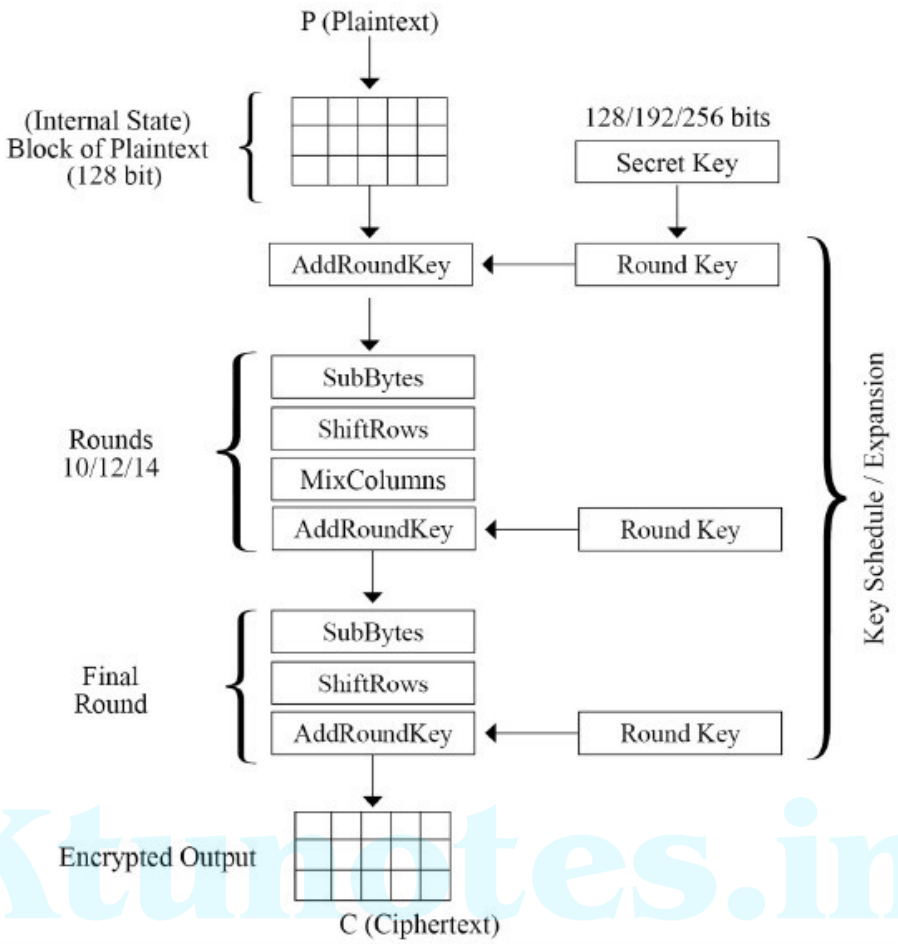

Fig: AES block diagram, showing the first round of AES encryption.

Asymmetric Cryptography

- Asymmetric cryptography refers to a type of cryptography where the key that is used to encrypt the data is different from the key that is used to decrypt the data.
- It uses both public and private keys to encrypt and decrypt data, respectively.
- That is why asymmetric cryptography is also known as **public key cryptography**.
- Examples of asymmetric cryptography are **RSA** (named after its founders, **R**ivest, **S**hamir, and **A**delman), **DSA** (**Digital Signature Algorithm**), and **ElGamal**encryption.

Downloaded from Ktunotes.in

Public and Private keys:

- A **private key**, as the name suggests, is a randomly generated number that is kept secret and held privately by its users.
- Private keys need to be protected and no unauthorized access should be granted to that key.
- Private keys can be of various lengths, depending on the type and class of algorithms used.
- A **public key** is freely available and published by the private key owner.

An overview of public-key cryptography is shown in the following diagram:

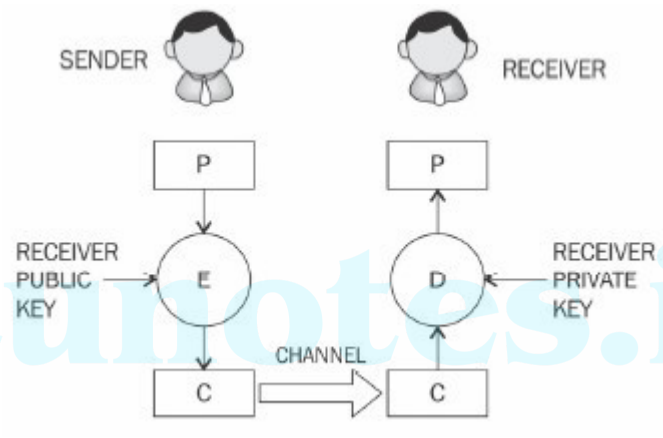

Fig: Encryption and Decryption using Public/Private keys

- The sender encrypts data **P** using the recipient's public key and encryption function **E**, and produces an output encrypted data **C**, which is then transmitted over the network to the receiver.
- Once it reaches the receiver, it can be decrypted using the receiver's private using the decryption function **D**, which will output plaintext **P**.
- This way, the private key remains on the receiver's side, and there is no need to share keys in order to perform encryption and decryption, which is the case with symmetric encryption.

The following diagram shows how the receiver uses public key cryptography to verify the integrity of the received message.

Downloaded from Ktunotes.in

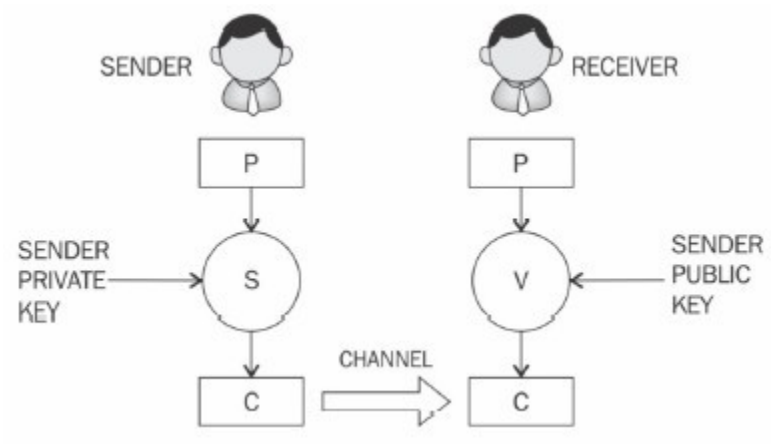

Fig: Signing and verification using public-key cryptography

- In this model, the sender signs the data using their private key and transmits the message across to the receiver. Once the message is received, it is verified for integrity by the sender's public key.
- It's worth noting that there is no encryption being performed in this model.
- The preceding diagram shows that the sender digitally signs the plaintext **P** with their private key using signing function **S**, and produces data **C**, which is sent to the receiver, who verifies **C** using the sender's public key and function **V** to ensure the message has indeed come from the sender.
- Public key algorithms are slower in terms of computation than symmetric key algorithms. Therefore, they are not commonly used in the encryption of large files or the actual data that requires encryption. They are usually used to exchange keys for symmetric algorithms. Once the keys are established securely, symmetric key algorithms can be used to encrypt the data.
- Security mechanisms offered by public key cryptosystems include key establishment, digital signatures, identification, encryption, and decryption.
- Public key cryptography algorithms are based on various underlying mathematical functions. The three main categories of asymmetric algorithms are:
    - **Integer factorization**
    - **Discrete logarithm**
    - **Elliptic curves**

Downloaded from Ktunotes.in

- **Integer factorization schemes** are based on the fact that large integers are very hard to factor. RSA is a prime example of this type of algorithm.
- A **discrete logarithm scheme** is based on a problem in modular arithmetic.It is easy to calculate the result of a modulo function, but it is computationally impractical to find the exponent of the generator.In other words, it is extremely difficult to find the input from the result (output).This is called a one-way function.
- The **elliptic curves algorithm** is based on the discrete logarithm problem discussed previously, but in the context of elliptic curves. An **elliptic curve** is an

  algebraic cubic curve over a field, which can be defined by an equation, as shown below. The curve is non-singular, which means that it has no cusps or self-intersections. It has two variables *a* and *b*, as well as a point of infinity:

$$y^2 = x^3 + ax + b$$

Ktunotes.in

  Here, *a* and *b* are integers whose values are elements of the field on which the elliptic curve is defined.

RSA (Rivest, AdiShamir and Leonard Adelman)

RSA was invented in 1977 by Ron **R**ivest, Adi**S**hamir, and Leonard**A**delman, hence the name RSA. This type of public key cryptography is based on the integer factorization problem, where the multiplication of two large prime numbers is easy, but it is difficult to factor the product (the result of the multiplication) back to the two original numbers.The crux of the work involved with the RSA algorithm happens during the key generation process.

An RSA key pair is generated by performing the following steps:

1. **Modulus generation:**
   - Select ***p*** and ***q***, which are very large prime numbers
   - Multiply *p* and *q*, ***n=p.q*** to generate modulus *n*

Downloaded from Ktunotes.in

2. **Calculate the Euler's Totient Function $\phi(n)$**

$$\phi(n) = (p-1)\ (q-1)$$

3. **Generate the co-prime:**
   - Assume a number called ***e***.
   - *e* should satisfy a certain condition; that is, it should be greater than *1* and less than $\phi(n)$. In other words, *e* must be a number such that no number other than *1* can be divided into *e* and $\phi(n)$. This is called a **co-prime**, that is, *e* is the co-prime of $\phi(n)$.

$$1 < e < \phi(n) \text{ and } \gcd(e, \phi(n)) = 1$$

4. **Generate the public key:**
   - The modulus generated in *step 1* and co-prime generated in *step2* as a pair is the public key, i.e., *(n, e).* This part is the public part that can be shared with anyone; however, *p* and *q* need to be kept secret.
5. **Generate the private key:**
   - The private key pair is (*d, e*). ***d*** is calculated from *p*, *q*, and *e*. The private key is basically the inverse of *e* modulo *(p-1)(q-1)*.

     As an equation, it is as follows:

$$ed = 1 \bmod (p-1)(q-1)$$

or

$$ed \bmod \phi(n) = 1$$

Now, let's see how encryption and decryption operations are performed using RSA.

- **Encryption in RSA** is provided using the following equation:

$$C = P^e \bmod n$$

- **Decryption in RSA** is provided using the following equation:

$$P = C^d \bmod n$$

Ktunotes.in

Downloaded from Ktunotes.in

- This means that the receiver who has a public key pair (n, e) can decipher the data using their private key pair (d, e).

Symmetric vs. Asymmetric Cryptography

Symmetric Cryptography	Asymmetric Cryptography
It only requires a single key for both encryption and decryption.	It requires two keys, a public key and a private key, one to encrypt and the other one to decrypt.
The size of cipher text is the same or smaller than the original plain text.	The size of cipher text is the same or larger than the original plain text.
It is used when a large amount of data is required to transfer.	It is used to transfer small amounts of data.
It only provides confidentiality.	It provides confidentiality, authenticity, and non-repudiation.
The encryption process is very fast.	The encryption process is slow.
The Mathematical Representation is as follows- P = D (K, E(P)) where K –> encryption and decryption key P –> plain text D –> Decryption E(P) –> Encryption of plain text	The Mathematical Representation is as follows- P = D(Kd, E (Ke,P)) where Ke –> encryption key Kd –> decryption key D –> Decryption E(Ke, P) –> Encryption of plain text using encryption key Ke . P –> plain text
Examples - AES, DES	Examples - RSA, DSA

Ktunotes.in

Downloaded from Ktunotes.in

Elliptic-Curve Cryptography :- (ECC)

advantage over RSA:

- The principle attraction of ECC, compared to RSA, is that it appears to offer equal security for a far smaller key size, thereby reducing processing overhead.
- ECC is an assymetric key encryption scheme.
- It makes use of elliptic curves.
- An elliptic curve is defined by an equation in two variables. (Note that elliptic curves are not ellipses).
- Elliptic curves are defined by some mathematical function (by an equation of degree 3. ie cubic fn)

$$\boxed{y^2 = x^3 + ax + b}$$

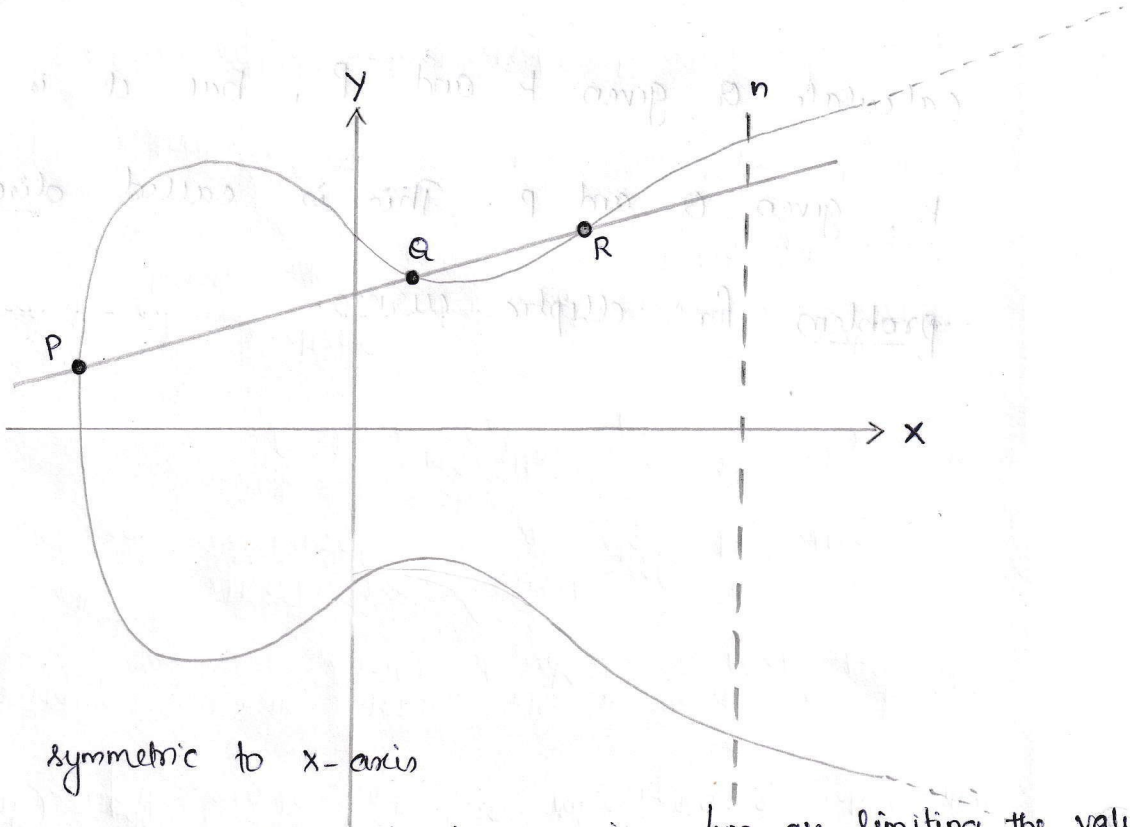

→ curve is symmetric to x-axis

- If we draw a line, it will touch a maximum of 3 points. | we are limiting the value till n.

Downloaded from Ktunotes.in

•) what is a <u>trap-door</u> function ?

- A trap-door function is a fn that is easy to compute in one direction, yet difficult to compute in the opposite direction (ie difficult to find the inverse) without some special information.

ie,

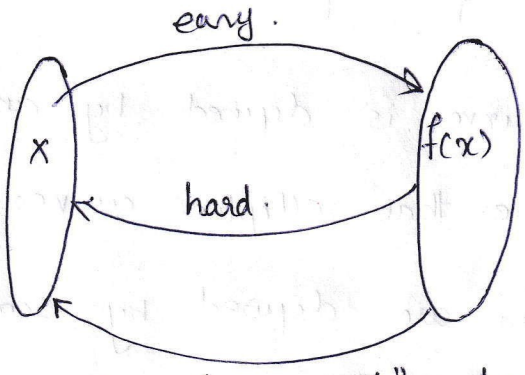

easy if given "t" → trapdoor value.

Ktunotes.in

- Consider the equation $Q = kP$, where Q and P are points on the curve and $k < n$. It is relatively easy to calculate Q given k and P, but it is hard to determine k, given Q and P. This is called <u>discrete logarithm problem</u> for elliptic curves.

Downloaded from Ktunotes.in

•) **ECC Key Exchange:**

① Global public elements: $[E_q(a,b)$ & $G]$

- first pick a large integer q, which is either a prime no. or an integer of the form 2^m.
- pick the elliptic curve parameters 'a' and 'b'
- Thus our elliptic curve will be,

$$E_q(a,b)$$

- Next pick a base point $G = (x_1, y_1)$ in $E_q(a,b)$, whose order is a very large value 'n'.
- The order 'n' of a point G on an elliptic curve is the smallest positive integer n such that $nG = 0$,

② User A key generation:

- Select private key (n_A). $(n_A < n)$
- Calculate the public key (P_A)

$$\boxed{P_A = n_A \times G}$$

③ User B key generation:

- Select private key n_B, $n_B < n$
- calculate public key P_B, $\boxed{P_B = n_B \times G}$

Ktunotes.in

Downloaded from Ktunotes.in

④ Calculation of secret key by user A.

$$\boxed{k = n_A \times P_B}$$

⑤ calculation of secret key by user B.

$$\boxed{k = n_B \times P_A}$$

Thus the secret key, k is shared among both the users A and B.

•) ECC encryption / decryption :-

Encryption:

- let our plain text message be 'm'.
- encode the msg 'm' as an x-y point P_m on the elliptic curve.
- Now the point P_m is encrypted into a cipher text point C_m.
- To encrypt the message point P_m, user A chooses a random positive integer k.
- Thus the cipher point will be,

$$\boxed{C_m = (kG \ , \ P_m + k \cdot P_B)}$$

- This point, C_m, will be sent to the user B (receiver)

Ktunotes.in

Downloaded from Ktunotes.in

For decryption:

- for decryption, B multiplies the first point in the pair by B's secret key and subtracts the result from the second point.

ie our $C_m = \{ \underbrace{k.G}_{\text{first point}}, \underbrace{P_m + k.P_B}_{\text{second point}} \}$

- ie, first multiply the first point in C_m with the receiver's secret key (or private key).

ie $\boxed{kG \times n_B}$

- then subtract this value from the 2nd point in C_m

ie $\boxed{P_m + k.P_B - (kG \times n_B)}$

- But we know that,

$n_B \times G = P_B$, ie the public key of the receiver.

$\therefore P_m + k.P_B - kG \times n_B$

$= P_m + k.P_B - k.P_B$

$= P_m + 0 = \underline{\underline{P_m}}$ ⇒ plain text point. Thus the decryption is successfully done.

Ktunotes.in

Downloaded from Ktunotes.in

Digital Signatures

Digital signatures provide a means of associating a message with an entity from which the message has originated. Digital signatures are used to provide data origin authentication and non-repudiation.Digital signatures are used in blockchains, where transactions are digitally signed by senders using their private key, before the sender broadcasts the transaction to the network. This digital signing proves that the sender is the rightful owner of the asset; for example, bitcoins. These transactions are verified again by other nodes on the network to ensure that the funds indeed belong to the node (user) who claims to be the owner.

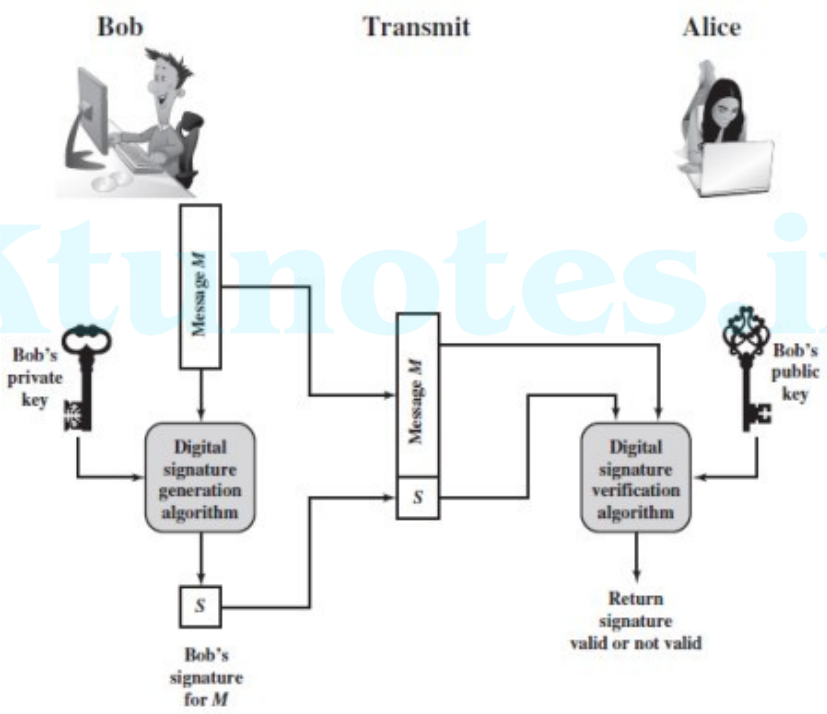

Fig: A generic model of digital signature

Digital Signature must have the following **properties**:

- **Authenticity** means that the digital signatures are verifiable by a receiving party.
- The **unforgeability** property ensures that only the sender of the message can use the signing functionality using the private key. Digital signatures must provide

Downloaded from Ktunotes.in

protection against forgery.In other words, unforgeability means that no one else can produce the signed message produced by a legitimate sender. This is also called the property of **non-repudiation**.

- **Non-reusability** means that the digital signature cannot be separated from a message and used again for another message. In other words, the digital signature is firmly bound to the corresponding message and cannot be simply cut from its original message and attached to another.

Various schemes, such as RSA-, DSA-, and ECDSA-based digital signature schemes, are used in practice. RSA is the most commonly used; however, with the traction of ECC, ECDSA-based schemes are also becoming quite popular. This is beneficial in blockchains because ECC provides the same level of security that RSA does, but it uses less space. Also, the generation of keys is much faster in ECC compared to RSA, so it helps with the overall performance of the system.

Ktunotes.in

RSA Digital Signature Algorithm

RSA-based digital signature algorithms are calculated using the two steps listed here. Fundamentally, the idea is to first compute the hash of the data and then sign it with the private key:

1. Calculate the hash value of the data packet. This will provide the data integrity guarantee, as the hash can be computed at the receiver's end again and matched with the original hash to check whether the data has been modified in transit. Technically, message signing can work without hashing the data first, but that is not considered secure.
2. Sign the hash value with the signer's private key. As only the signer has the private key, the authenticity of the signature and the signed data is ensured.

Downloaded from Ktunotes.in

The operation of a generic digital signature function using RSA is shown in the following diagram:

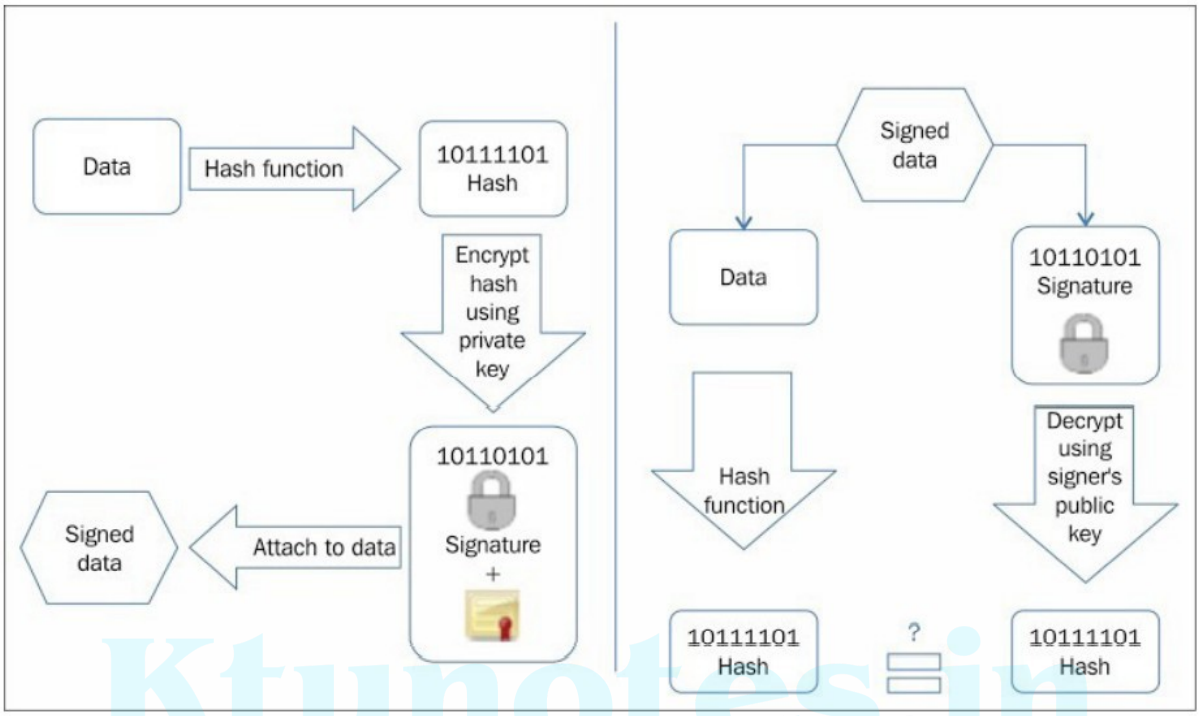

Fig: Digital signing (left) and verification process (right) (example of RSA digital signatures)

If a sender wants to send an authenticated message to a receiver, there are two methods that can be used: sign then encrypt and encrypt then sign. These two approaches of using digital signatures with encryption are as follows.

- **Sign then encrypt:**With this approach, the sender digitally signs the data using the private key, appends the signature to the data, and then encrypts the data and the digital signature using the receiver's public key. This is considered a more secure scheme compared to the 'encrypt then sign' scheme.

- **Encrypt then sign:**With this method, the sender encrypts the data using the receiver's public key and then digitally signs the encrypted data.

Downloaded from Ktunotes.in

Elliptic Curve Digital Signature Algorithm (ECDSA)

In order to sign and verify using the ECDSA scheme, the first key pair needs to be generated:

1. First, define an elliptic curve E with the following:
   - Modulus q
   - Coefficients a and b
   - Generator point G that forms a cyclic group of prime order n
2. An integer n_A is chosen randomly so that 0 < $_A$ < n.
3. Calculate public key $_A$ so that $P_A = n_A$ G.
   - The public key is a six tuple in the form shown here:

     $$K_{pb} = (q,a,b,n,G, P_A)$$

   - The private key is a randomly chosen integer n_A in step 2:

     $$K_{pr} = n_A$$

Ktunotes.in

   Now, the signature can be generated using the private and public key.
4. An ephemeral key K_e is chosen, where 0 < $_e$ < n. It should be ensured that K_e is truly random and that no two signatures have the same key; otherwise, the private key can be calculated.
5. Another value R is calculated using R = K_e G; that is, by multiplying G (the generator point) and the random ephemeral key.
6. Initialize a variable r with the x coordinate value of point R so that r = xR.
7. The signature can be calculated as follows:

   $$S = (h(m) + n_A r) K_e\text{-}1 \bmod n$$

   Here, m is the message for which the signature is being computed, and h(m) is the hash of the message m.
8. Signature verification is carried out by following this process:
   - Auxiliary value w is calculated as, $w = s\text{-}1 \bmod n$
   - Auxiliary value $u1 = w.\ h(m) \bmod n$

Downloaded from Ktunotes.in

- Auxiliary value $u2 = w.\ r \bmod n$
- Calculate point P, $P = u1G + u2P_A$

9. Verification is carried out as follows:
   - r, s is accepted as a valid signature if the x-coordinate of point P has the same value as r mod n ; that is:

$$Xp = r \bmod n \text{ means valid signature}$$

$$Xp \mathrel{!=} r \bmod n \text{ means invalid signature}$$

Hash Functions

Hash functions are used to create fixed-length digests of arbitrarily long input strings. Hash functions are keyless cryptographic primitives, and they provide a data integrity service. Various families of hash functions are available, such as MD, SHA-1, SHA-2, SHA-3 and Whirlpool.

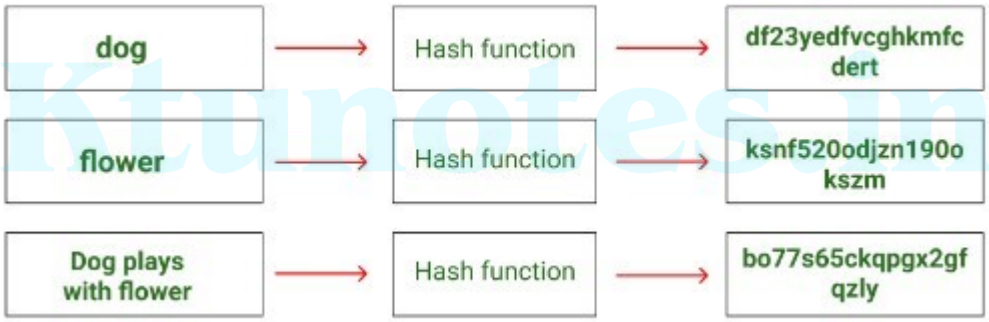

Hash functions are typically used to provide data integrity services. These can be used both as one-way functions and to construct other cryptographic primitives, such as MACs and digital signatures.

Different properties of hash functions are given below. There are two practical and three security properties for hash functions.

The **practical properties** are:

- **Compression of arbitrary messages into fixed-length digests**

  A hash function must be able to take an input text of any length and output a fixed-length compressed message. Hash functions produce a compressed output in various bit sizes, usually between 128-bits and 512-bits.

Downloaded from Ktunotes.in

- **Easy to compute**

  Hash functions are efficient and fast one-way functions. It is required that hash functions should be very quick to compute regardless of the message size.

The **security properties** of hash functions are:

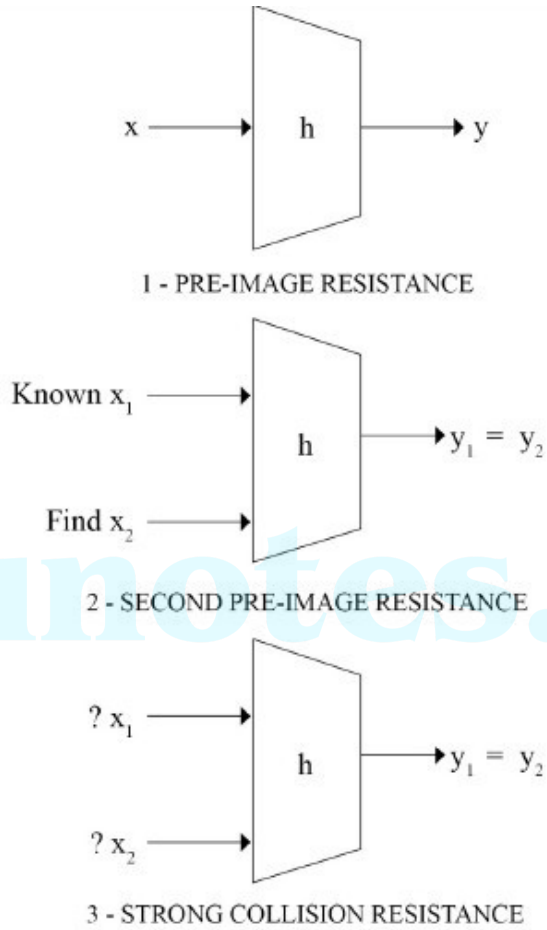

Fig: The three security properties of hash functions

- **Pre-image Resistance (One-way Property)**

  This property can be explained by using the simple equation:

$$h(x) = y$$

  Here, h is the hash function, x is the input, and y is the hash. This property requires that y cannot be reverse-computed to x. x is considered a pre-image of y, hence the name pre-image resistance. This is also called a one-way property.

Downloaded from Ktunotes.in

- **Second Pre-image Resistance (Weak Collision Resistance)**

  The second pre-image resistance property requires that given x and h(x), it is almost impossible to find any other message m, where m! = x and hash of m = hash of x or h(m) = h(x). This property is also known as weak collision resistance.

- **Collision Resistance (Strong Collision Resistance)**

  The collision resistance property requires that two different input messages should not hash to the same output. In other words, h(x) != h(z). This property is also known as strong collision resistance.

Avalanche Effect:

A concept known as the avalanche effect is desirable in all cryptographic hash functions. The avalanche effect specifies that a small change, even a single character change in the input text, will result in an entirely different hash output.

Ktunotes.in

Secure Hash Algorithms (SHA - 256)

SHA-256 is included in the SHA-2 category. SHA-256 is used in Bitcoins.

Design of SHA-256

SHA-256 has an input message size limit of 2^{64} - 1 bits. The block size is 512 bits, and it has a word size of 32 bits. The output is a 256-bit digest. The algorithm works as follows, in nine steps:

Pre-processing:

1. **Padding** of the message is used to adjust the length of a block to a multiple of 512 bits if it is smaller than the required block size.

2. **Parsing** the message into message blocks, which ensures that the message and its padding is divided into equal blocks of 512 bits

Downloaded from Ktunotes.in

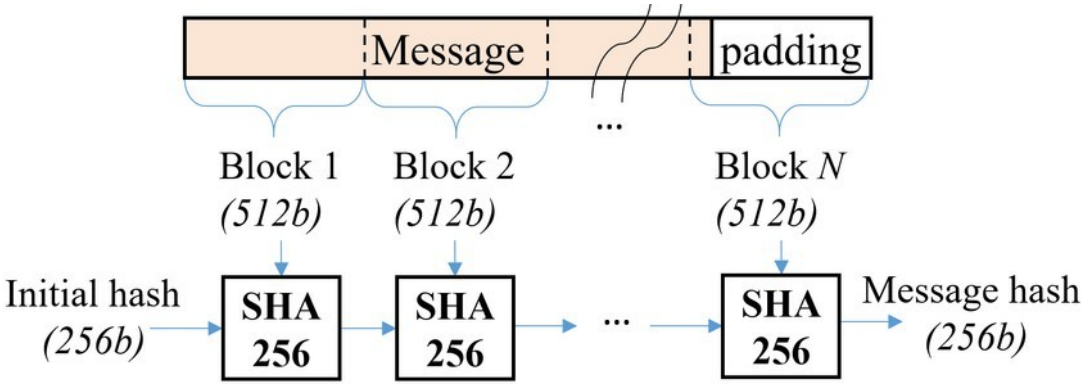

3. **Initializing the buffers.** Setting up the initial hash value, which consists of the eight 32-bit words obtained by taking the first 32 bits of the fractional parts of the square roots of the first eight prime numbers. These initial values are fixed and chosen to initialize the process.

H_0 = 6a09e667
H_1 = bb67ae85
H_2 = 3c6ef372
H_3 = a54ff53a
H_4 = 510e527f
H_5 = 9b05688c
H_6 = 1f83d9ab
H_7 = 5be0cd19

Ktunotes.in

Hash Computing:

4. Each message block is then processed in a sequence, and it requires 64 rounds to compute the full hash output. Each round uses slightly different constants to ensure that no two rounds are the same.
5. The message schedule is prepared.
6. Eight working variables are initialized.
7. The compression function runs 64 times.
8. The intermediate hash value is calculated.

Downloaded from Ktunotes.in

9. Finally, after repeating steps 5 through 8 until all blocks in the input message are processed, the output hash is produced by concatenating intermediate hash values.

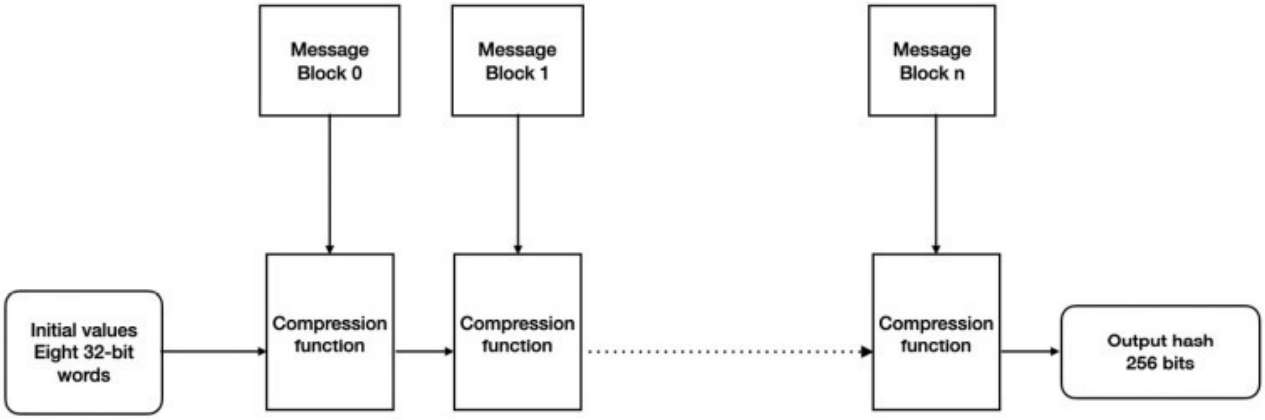

Fig: SHA-256 high level overview

As shown in the above diagram, SHA-256 takes the input message and divides it into equal blocks (chunks of data) of 512 bits. Initial values (or initial hash values) or the initialization vector are composed of eight 32 bit words (256 bits) that are fed into the compression function with the first message. Subsequent blocks are fed into the compression function until all blocks are processed and finally, the output hash is produced.

The compression function of SHA-256 is shown in the following diagram:

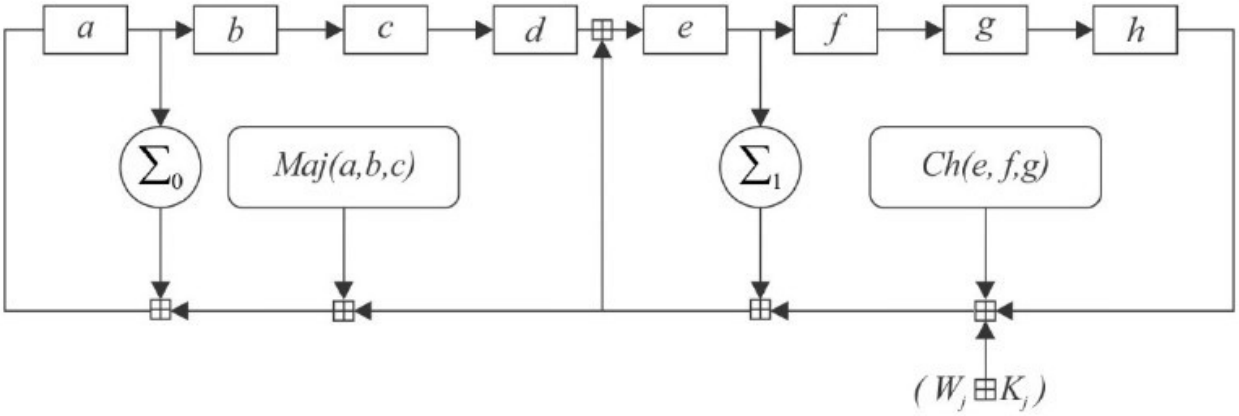

Fig: One round of an SHA-256 compression function

Downloaded from Ktunotes.in

In the preceding diagram, a, b, c, d, e, f, g, and h are the registers for 8 working variables. Maj (majority) and Ch (choose) functions are applied bitwise.

$$Ch(x,y,z) = (x \wedge y) \oplus (x \wedge z)$$
$$Maj(x,y,z) = (x \wedge y) \oplus (x \wedge z) \oplus (y \wedge z)$$

Σ_0 and Σ_1 perform bitwise rotation. The round constants are Wj and Kj, which are added in the main loop (compressor function) of the hash function.

Applications of cryptographic hash functions

- Hash functions are used to build Merkle trees, which are used to efficiently and securely verify large amounts of data in distributed systems.
- Hash functions are used in cryptographic puzzles such as the **Proof of Work (PoW)** mechanism in Bitcoin. Bitcoin's PoW makes use of the SHA-256 cryptographic hash function.
- The generation of addresses in blockchains. For example, in Ethereum, blockchain accounts are represented as addresses.
- Message digests (or hash values) in digital signatures.

Ktunotes.in

Merkle Trees

- The concept of Merkle trees was introduced by Ralph Merkle.
- Merkle trees enable the secure and efficient verification of large datasets.
- A Merkle tree is a binary tree in which the inputs are first placed at the leaves (nodes with no children).
- Then the values of pairs of child nodes are hashed together to produce a value for the parent node (internal node), until a single hash value known as a **Merkle root** is achieved.

Downloaded from Ktunotes.in

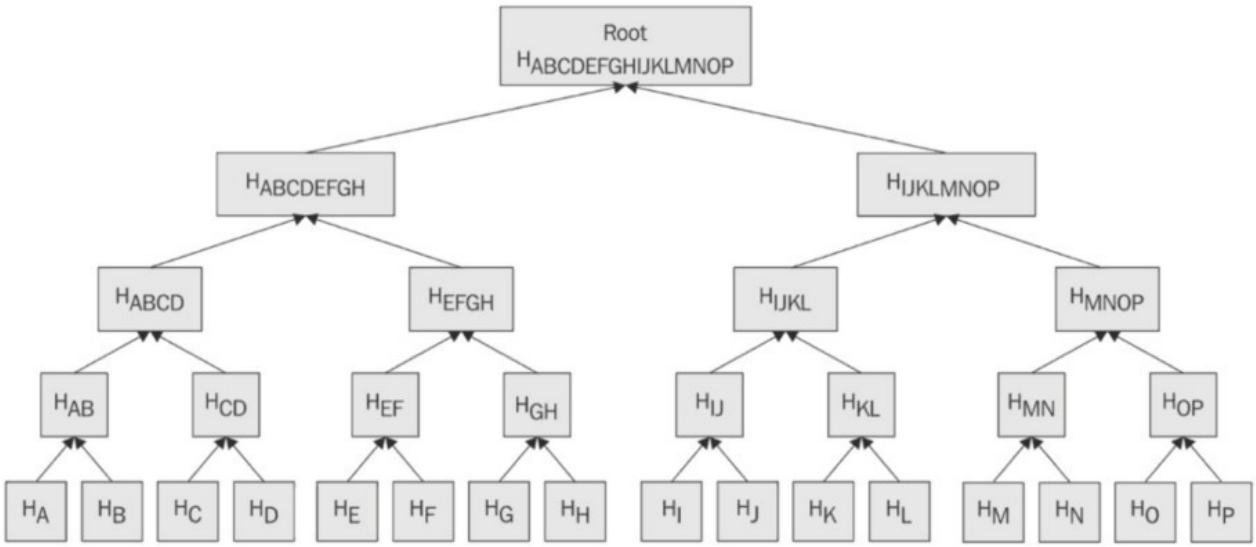

Fig: A Merkle Tree

- This structure helps to quickly verify the integrity of the entire tree (entire dataset), just by verifying the Merkle root on top of the Merkle tree, because if any change occurs in any of the hashes in the tree, the Merkle root will also change.
- Another advantage of Merkle trees is that there is no requirement of storing large amounts of data, only the hashes of the data, which are fixed-length digests of the large dataset need to be stored. Due to this property, the storage and management of Merkle trees is easy and efficient.
- Also, due to the fact that the tree is storage efficient, it is also bandwidth efficient over the network.

Ktunotes.in

Distributed hash tables

A distributed hash table (DHT) is a type of distributed system that provides a lookup service similar to a hash table. In a hash table, data is stored and retrieved using keys, and the keys are used to determine the location of the data in the table. A distributed hash table is similar, but the data is distributed across multiple nodes in a network rather than being stored in a single table.

Downloaded from Ktunotes.in

In a DHT, each node is responsible for storing and managing a portion of the data. When a client wants to retrieve or store data, it sends a request to the network. The request is then forwarded to the appropriate node based on the key of the data being requested. The node then responds to the request and either retrieves or stores the data. DHTs are used in a variety of applications, including peer-to-peer (P2P) networks, distributed databases, and distributed file systems.

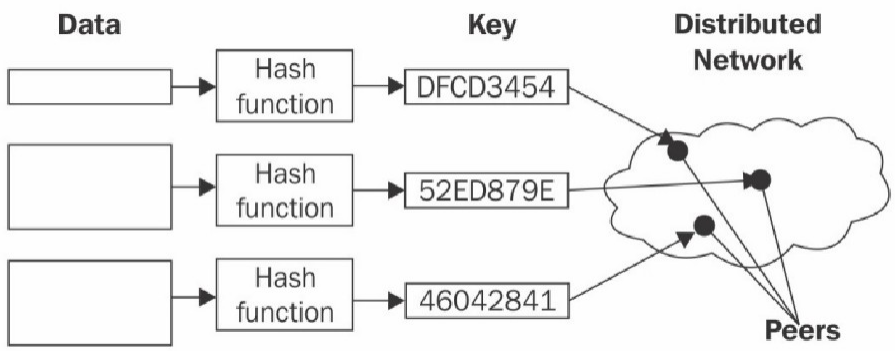

Fig: Distributed Hash Table

Ktunotes.in

Downloaded from Ktunotes.in