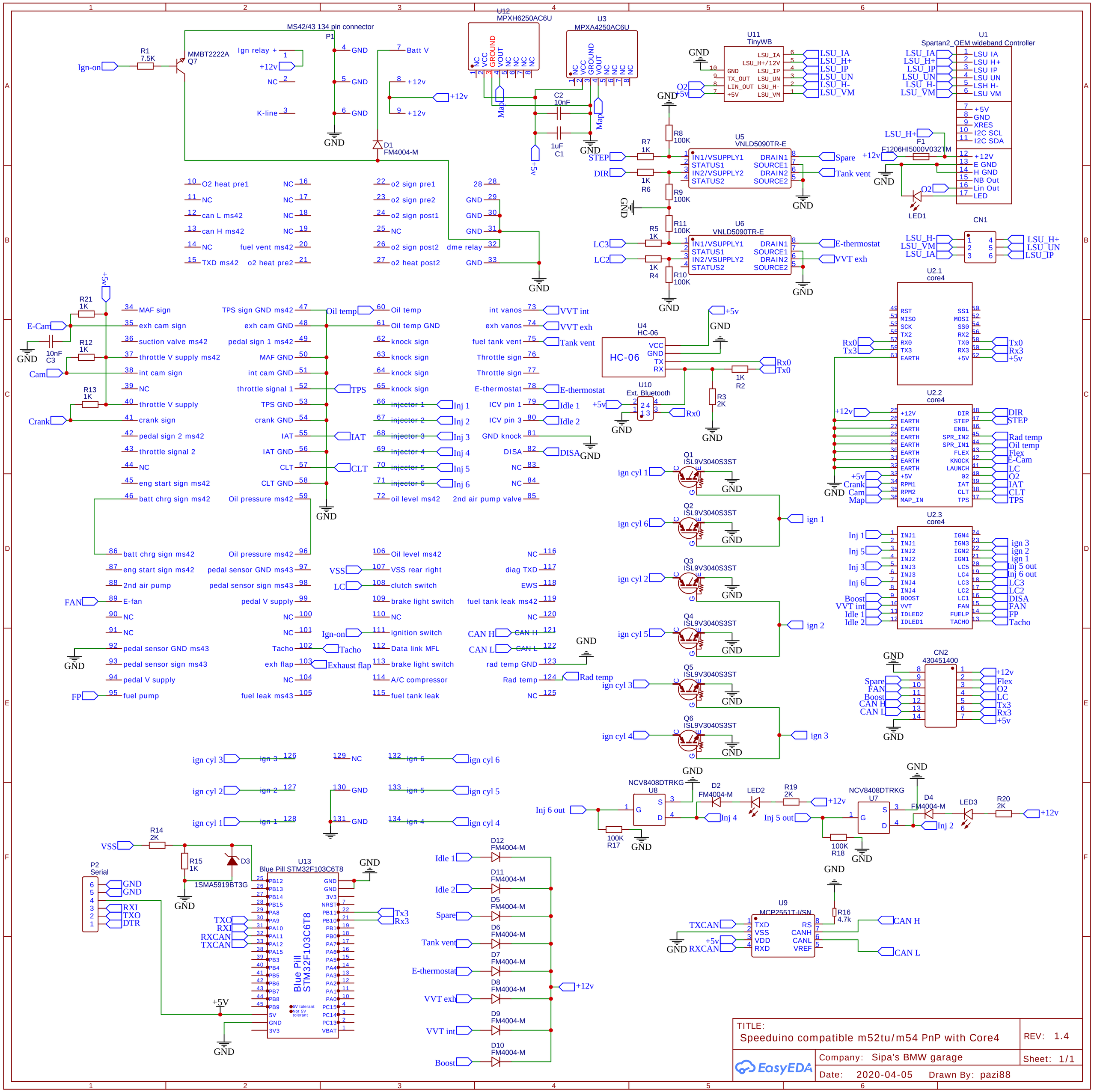
MS42/43 134 pin connector
P1
Ign-on
R1 7.5K
MMBT2222A Q7
Ign relay +
+12v
NC
K-line
GND
Batt V
D1 FM4004-M
U12 MPXH6250AC6U
U3 MPXA4250AC6U
C2 10nF
1uF C1
+5v
U11 TinyWB
LSU_IA
LSU_H+
LSU_IP
LSU_UN
LSU_H-
LSU_VM
U1 Spartan2_OEM wideband Controller
LSU IA
LSU H+
LSU IP
LSU UN
LSH H-
LSU VM
+5V
XRES
I2C SCL
I2C SDA
+12V
E GND
H GND
NB Out
Lin Out
LED
F1 F1206HI5000V032TM
LED1
U5 VNLD5090TR-E
U6 VNLD5090TR-E
IN1/VSUPPLY1
STATUS1
IN2/VSUPPLY2
STATUS2
DRAIN1
SOURCE1
DRAIN2
SOURCE2
STEP
DIR
R7 1K
R6 1K
R8 100K
R9 100K
R11 100K
R10 100K
R5 1K
R4 1K
LC3
LC2
Spare
Tank vent
E-thermostat
VVT exh
CN1
U2.1 core4
U2.2 core4
U2.3 core4
RST
MISO
SCK
TX2
RX0
TX3
EARTH
SS1
MOSI
SS0
RX2
TX0
RX3
+5V
Rx0
Tx0
Tx3
Rx3
+5v
U4 HC-06
VCC
GND
TX
RX
R2 1K
R3 2K
U10 Ext. Bluetooth
Q1 ISL9V3040S3ST
Q2 ISL9V3040S3ST
Q3 ISL9V3040S3ST
Q4 ISL9V3040S3ST
Q5 ISL9V3040S3ST
Q6 ISL9V3040S3ST
ign cyl 1
ign cyl 6
ign cyl 2
ign cyl 5
ign cyl 3
ign cyl 4
ign 1
ign 2
ign 3
DIR
STEP
ENBL
SPR_IN2
SPR_IN1
FLEX
KNOCK
LAUNCH
02
IAT
CLT
TPS
Rad temp
Oil temp
Flex
E-Cam
LC
O2
IAT
CLT
TPS
INJ1
INJ2
INJ3
INJ4
BOOST
VVT
IDLED2
IDLED1
IGN4
IGN3
IGN2
IGN1
LC5
LC4
LC3
LC2
LC1
FAN
FUELP
TACHO
Inj 1
Inj 5
Inj 3
Inj 6
Boost
VVT int
Idle 1
Idle 2
Inj 5 out
Inj 6 out
CN2 430451400
Spare
FAN
Boost
CAN H
CAN L
+12v
Flex
O2
LC
Tx3
Rx3
+5v
NCV8408DTRKG U8
NCV8408DTRKG U7
D2 FM4004-M
D4 FM4004-M
LED2
LED3
R19 2K
R20 2K
R17 100K
R18 100K
Inj 4
Inj 2
R14 2K
R15 1K
D3 1SMA5919BT3G
VSS
P2 Serial
RXI
TXO
DTR
U13 Blue Pill STM32F103C6T8
TXCAN
RXCAN
Tx3
Rx3
D12 FM4004-M
D11 FM4004-M
D5 FM4004-M
D6 FM4004-M
D7 FM4004-M
D8 FM4004-M
D9 FM4004-M
D10 FM4004-M
U9 MCP2551T-I/SN
TXD
VSS
VDD
RXD
RS
CANH
CANL
VREF
R16 4.7k
CAN H
CAN L
TITLE:
Speeduino compatible m52tu/m54 PnP with Core4
REV: 1.4
Company: Sipa's BMW garage
Sheet: 1/1
Date: 2020-04-05
Drawn By: pazi88
EasyEDA