Part IV Particulate Processing of Metals and Ceramics

15 Powder Metallurgy

Chapter Contents

15.1 Characterization of Engineering Powders
- 15.1.1 Geometric Features
- 15.1.2 Other Features

15.2 Production of Metallic Powders
- 15.2.1 Atomization
- 15.2.2 Other Production Methods

15.3 Conventional Pressing and Sintering
- 15.3.1 Blending and Mixing of the Powders
- 15.3.2 Compaction
- 15.3.3 Sintering
- 15.3.4 Secondary Operations

15.4 Alternative Pressing and Sintering Techniques
- 15.4.1 Isostatic Pressing
- 15.4.2 Powder Injection Molding
- 15.4.3 Powder Rolling, Extrusion, and Forging
- 15.4.4 Combined Pressing and Sintering
- 15.4.5 Liquid Phase Sintering

15.5 Materials and Products for Powder Metallurgy

15.6 Design Considerations in Powder Metallurgy

This part of the book is concerned with the processing of metals and ceramics that are in the form of powders—very small particulate solids. In the case of traditional ceramics, the powders are produced by crushing and grinding common materials that are found in nature, such as silicate minerals (clay) and quartz. In the case of metals and the new ceramics, the powders are produced by a variety of industrial processes. The powder-making processes as well as the methods used to shape products out of powders are covered in two chapters: Chapter 15 on powder metallurgy and Chapter 16 on particulate processing of ceramics and cermets.

Powder metallurgy (PM) is a metal processing technology in which parts are produced from metallic powders. In the usual PM production sequence, the powders are compressed into the desired shape and then heated to cause bonding of the particles into a hard, rigid mass. Compression, called ***pressing***, is accomplished in a press-type machine using tools designed specifically for the part to be manufactured. The tooling, which typically consists of a die and one or more punches, can be expensive, and PM is therefore most appropriate for medium and high production. The heating treatment, called ***sintering***, is performed at a temperature below the melting point of the metal. Considerations that make powder metallurgy an important commercial technology include:

- PM parts can be mass produced to ***net shape*** or ***near net shape***, eliminating or reducing the need for subsequent processing.
- The PM process itself involves very little waste of material; about 97% of the starting powders are converted to product. This compares favorably with casting processes in which sprues, runners, and risers are wasted material in the production cycle.
- Owing to the nature of the starting material in PM, parts having a specified level of porosity can be made. This feature lends itself to the production of porous metal parts, such as filters, and oil-impregnated bearings and gears.
- Certain metals that are difficult to fabricate by other methods can be shaped by powder metallurgy. Tungsten is an example; tungsten filaments used in incandescent lamp bulbs are made using PM technology.
- Certain metal alloy combinations and cermets can be formed by PM that cannot be produced by other methods.
- PM compares favorably with most casting processes in terms of dimensional control of the product. Tolerances of ±0.13 mm (±0.005 in) are held routinely.
- PM production methods can be automated for economical production.

There are limitations and disadvantages associated with PM processing. These include the following: (1) tooling and equipment costs are high, (2) metallic powders are expensive, and (3) there are difficulties with storing and handling metal powders (such as degradation of the metal over time, and fire hazards with particular metals). Also, (4) there are limitations on part geometry because metal powders do not readily flow laterally in the die during pressing, and allowances must be provided for ejection of the part from the die after pressing. In addition, (5) variations in material density throughout the part may be a problem in PM, especially for complex part geometries.

Although parts as large as 22 kg (50 lb) can be produced, most PM components are less than 2.2 kg (5 lb). A collection of typical PM parts is shown in Figure 15.1.

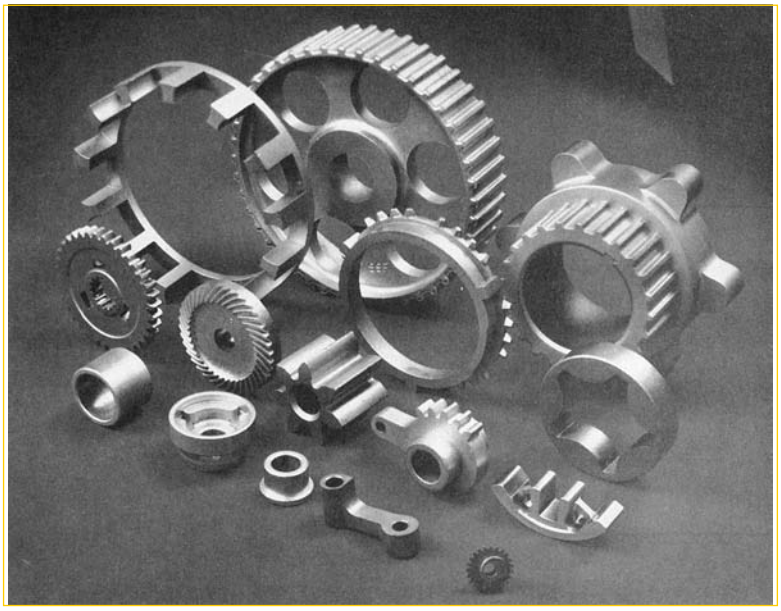

FIGURE 15.1 A collection of powder metallurgy parts. (Courtesy of Dorst America, Inc.)

The largest tonnage of metals for PM are alloys of iron, steel, and aluminum. Other PM metals include copper, nickel, and refractory metals such as molybdenum and tungsten. Metallic carbides such as tungsten carbide are often included within the scope of powder metallurgy; however, because these materials are ceramics, their consideration is deferred until the next chapter.

The development of the modern field of powder metallurgy dates back to the 1800s (Historical Note 15.1). The scope of the modern technology includes not only parts production but also preparation of the starting powders. Success in powder metallurgy depends to a large degree on the characteristics of the starting powders; this topic is discussed in Section 15.1. Later sections describe powder production, pressing, and sintering. There is a close correlation between PM technology and aspects of ceramics processing. In ceramics (except glass), the starting material is also powder, so the methods for characterizing the powders are closely related to those in PM. Several of the shape-forming methods are similar, also.

Historical Note 15.1 *Powder metallurgy*

Powders of metals such as gold and copper, as well as some of the metallic oxides, have been used for decorative purposes since ancient times. The uses included decorations on pottery, bases for paints, and in cosmetics. It is believed that the Egyptians used PM to make tools as far back as 3000 B.C.

The modern field of powder metallurgy dates to the early nineteenth century, when there was a strong interest in the metal platinum. Around 1815, Englishman William Wollaston developed a technique for preparing platinum powders, compacting them under high pressure, and baking (sintering) them at red heat. The Wollaston process marks the beginning of powder metallurgy as it is practiced today.

U.S. patents were issued in 1870 to S. Gwynn that relate to PM self-lubricating bearings. He used a mixture of 99% powdered tin and 1% petroleum, mixing, heating, and finally subjecting the mixture to extreme pressures to form it into the desired shape inside a mold cavity.

By the early 1900s, the incandescent lamp had become an important commercial product. A variety of filament materials had been tried, including carbon, zirconium, vanadium, and osmium; but it was concluded that tungsten was the best filament material. The problem was that tungsten was difficult to process because of its high melting point and unique properties. In 1908, William Coolidge developed a procedure that made production of tungsten incandescent lamp filaments feasible. In his process, fine powders of tungsten oxide (WO_3) were reduced to metallic powders, pressed into compacts, presintered, hot-forged into rounds, sintered, and finally drawn into filament wire. The Coolidge process is still used today to make filaments for incandescent light bulbs.

In the 1920s, cemented carbide tools (WC–Co) were being fabricated by PM techniques (Historical Note 7.2). Self-lubricating bearings were produced in large quantities starting in the 1930s. Powder metal gears and other components were mass produced in the 1960s and 1970s, especially in the automotive industry; and in the 1980s, PM parts for aircraft turbine engines were developed.

15.1 Characterization of Engineering Powders

A ***powder*** can be defined as a finely divided particulate solid. This section characterizes metallic powders. However, most of the discussion applies to ceramic powders as well.

15.1.1 GEOMETRIC FEATURES

The geometry of the individual powders can be defined by the following attributes: (1) particle size and distribution, (2) particle shape and internal structure, and (3) surface area.

Particle Size and Distribution Particle size refers to the dimensions of the individual powders. If the particle shape is spherical, a single dimension is adequate. For other shapes, two or more dimensions are needed. There are various methods available to obtain particle size data. The most common method uses screens of different mesh sizes. The term ***mesh count*** is used to refer to the number of openings per linear inch of screen. Higher mesh count indicates smaller particle size. A mesh count of 200 means there are 200 openings per linear inch. Because the mesh is square, the count is the same in both directions, and the total number of openings per square inch is $200^2 = 40{,}000$.

Particles are sorted by passing them through a series of screens of progressively smaller mesh size. The powders are placed on a screen of a certain mesh count and vibrated so that particles small enough to fit through the openings pass through to the next screen below. The second screen empties into a third, and so forth, so that the particles are sorted according to size. A certain powder size might be called size 230 through 200, indicating that the powders have passed through the 200 mesh, but not 230. The procedure of separating the powders by size is called ***classification***.

The openings in the screen are less than the reciprocal of the mesh count because of the thickness of the wire in the screen, as illustrated in Figure 15.2. Assuming that the limiting dimension of the particle is equal to the screen opening,

$$PS = \frac{K}{MC} - t_w \tag{15.1}$$

where PS = particle size, mm (in); MC = mesh count, openings per linear inch; and t_w = wire thickness of screen mesh, mm (in); and K = a constant whose value = 25.4 when the size units are millimeters (and $K = 1.0$ when the units are inches). The figure shows how smaller particles would pass through the openings, whereas larger powders would not. Variations occur in the powder sizes sorted by screening owing to differences in particle shapes, the range of sizes between mesh count steps, and variations in screen openings within a given mesh count. Also, the screening method has a practical upper limit of $MC = 400$ (approximately), because of the difficulty in making such fine screens and because of agglomeration of the small powders. Other methods to measure particle size include microscopy and X-ray techniques.

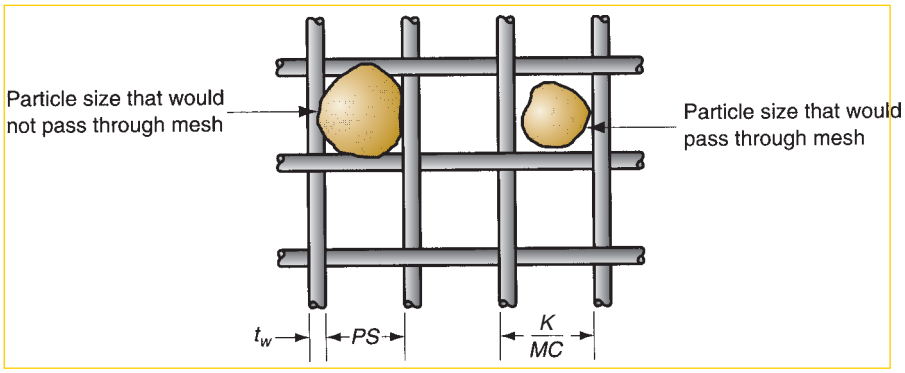

FIGURE 15.2 Screen mesh for sorting particle sizes.

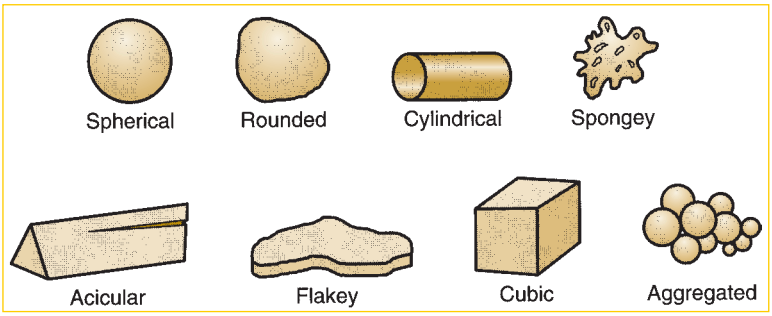

FIGURE 15.3 Several of the possible (ideal) particle shapes in powder metallurgy.

Typical particle sizes used in conventional powder metallurgy (press and sinter) range between 25 and 300 μm (0.001 and 0.012 in).[1] The low end of the range corresponds to a mesh count of about 500, which is too small to be measured by the mesh count method; and the high end of the range corresponds to a mesh count of around 50.

Particle Shape and Internal Structure Metal powder shapes can be cataloged into various types, several of which are illustrated in Figure 15.3. There will be a variation in the particle shapes in a collection of powders, just as the particle size will vary. A simple and useful measure of shape is the aspect ratio—the ratio of maximum dimension to minimum dimension for a given particle. The aspect ratio for a spherical particle is 1.0, but for an acicular grain the ratio might be 2 to 4. Microscopic techniques are required to determine shape characteristics.

Any volume of loose powders will contain pores between the particles. These are called ***open pores*** because they are external to the individual particles. Open pores are spaces into which a fluid such as water, oil, or a molten metal, can penetrate. In addition, there are ***closed pores***—internal voids in the structure of an individual particle. The existence of these internal pores is usually minimal, and their effect when they do exist is minor, but they can influence density measurements.

Surface Area Assuming that the particle shape is a perfect sphere, its area A and volume V are given by

$$A = \pi D^2 \tag{15.2}$$

$$V = \frac{\pi D^3}{6} \tag{15.3}$$

where D = diameter of the spherical particle, mm (in). The area-to-volume ratio A/V for a sphere is then given by

$$\frac{A}{V} = \frac{6}{D} \tag{15.4}$$

In general, the area-to-volume ratio can be expressed for any particle shape—spherical or nonspherical—as follows:

$$\frac{A}{V} = \frac{K_s}{D} \quad \text{or} \quad K_s = \frac{AD}{V} \tag{15.5}$$

[1] These values are provided by Prof. Wojciech Misiolek, the author's colleague in Lehigh's Department of Materials Science and Engineering. Powder metallurgy is one of his research areas.

where K_s = shape factor; D in the general case = the diameter of a sphere of equivalent volume as the nonspherical particle, mm (in). Thus, $K_s = 6.0$ for a sphere. For particle shapes other than spherical, $K_s > 6$.

The following can be inferred from these equations. Smaller particle size and higher shape factor (K_s) mean higher surface area for the same total weight of metal powders. This means greater area for surface oxidation to occur. Small powder size also leads to more agglomeration of the particles, which is a problem in automatic feeding of the powders. The reason for using smaller particle sizes is that they provide more uniform shrinkage and better mechanical properties in the final PM product.

15.1.2 OTHER FEATURES

Other features of engineering powders include interparticle friction, flow characteristics, packing, density, porosity, chemistry, and surface films.

Interparticle Friction and Flow Characteristics Friction between particles affects the ability of a powder to flow readily and pack tightly. A common measure of interparticle friction is the ***angle of repose***, which is the angle formed by a pile of powders as they are poured from a narrow funnel, as in Figure 15.4. Larger angles indicate greater friction between particles. Smaller particle sizes generally show greater friction and steeper angles. Spherical shapes result in the lowest interparticle friction; as shape deviates more from spherical, friction between particles tends to increase.

Flow characteristics are important in die filling and pressing. Automatic die filling depends on easy and consistent flow of the powders. In pressing, resistance to flow increases density variations in the compacted part; these density gradients are generally undesirable. A common measure of flow is the time required for a certain amount of powder (by weight) to flow through a standard-sized funnel. Smaller flow times indicate easier flow and lower interparticle friction. To reduce interparticle friction and facilitate flow during pressing, lubricants are often added to the powders in small amounts.

Packing, Density, and Porosity Packing characteristics depend on two density measures. First, ***true density*** is the density of the true volume of the material. This is the density when the powders are melted into a solid mass, values of which are given in Table 4.1. Second, ***bulk density*** is the density of the powders in the loose state after pouring, which includes the effect of pores between particles. Because of the pores, bulk density is less than true density.

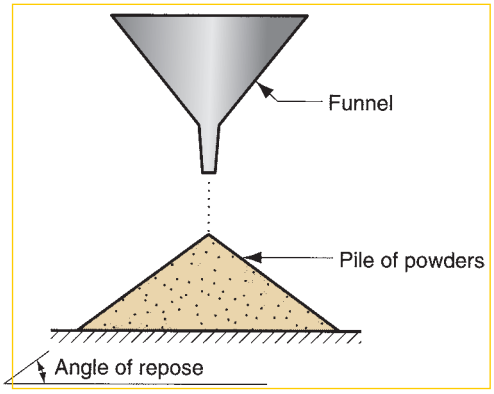

FIGURE 15.4 Interparticle friction as indicated by the angle of repose of a pile of powders poured from a narrow funnel. Larger angles indicate greater interparticle friction.

The ***packing factor*** is the bulk density divided by the true density. Typical values for loose powders range between 0.5 and 0.7. The packing factor depends on particle shape and the distribution of particle sizes. If powders of various sizes are present, the smaller powders will fit into the interstices of the larger ones that would otherwise be taken up by air, thus resulting in a higher packing factor. Packing can also be increased by vibrating the powders, causing them to settle more tightly. Finally, the external pressure applied during compaction greatly increases packing of powders through rearrangement and deformation of the particles.

Porosity represents an alternative way of considering the packing characteristics of a powder. ***Porosity*** is defined as the ratio of the volume of the pores (empty spaces) in the powder to the bulk volume. In principle,

$$\text{Porosity} + \text{Packing factor} = 1.0 \tag{15.6}$$

The issue is complicated by the possible existence of closed pores in some of the particles. If these internal pore volumes are included in the above porosity, then the equation is exact.

Chemistry and Surface Films Characterization of the powder would not be complete without an identification of its chemistry. Metallic powders are classified as either elemental, consisting of a pure metal, or pre-alloyed, wherein each particle is an alloy. These classes and the metals commonly used in PM are discussed more thoroughly in Section 15.5.

Surface films are a problem in powder metallurgy because of the large area per unit weight of metal when dealing with powders. The possible films include oxides, silica, adsorbed organic materials, and moisture [6]. Generally, these films must be removed before shape processing.

2 Production of Metallic Powders

In general, producers of metallic powders are not the same companies as those that make PM parts. The powder producers are the suppliers; the plants that manufacture components out of powder metals are the customers. It is therefore appropriate to separate the discussion of powder production (this section) from the processes used to make PM products (later sections).

Virtually any metal can be made into powder form. There are three principal methods by which metallic powders are commercially produced, each of which involves energy input to increase the surface area of the metal. The methods are (1) atomization, (2) chemical, and (3) electrolytic [13]. In addition, mechanical methods are occasionally used to reduce powder sizes; however, these methods are much more commonly associated with ceramic powder production and are covered in the next chapter.

15.2.1 ATOMIZATION

This method involves the conversion of molten metal into a spray of droplets that solidify into powders. It is the most versatile and popular method for producing metal powders today, applicable to almost all metals, alloys as well as pure metals. There

are multiple ways of creating the molten metal spray, several of which are illustrated in Figure 15.5. Two of the methods shown are based on ***gas atomization***, in which a high velocity gas stream (air or inert gas) is utilized to atomize the liquid metal. In Figure 15.5(a), the gas flows through an expansion nozzle, siphoning molten metal from the melt below and spraying it into a container. The droplets solidify into powder form. In a closely related method shown in Figure 15.5(b), molten metal flows by gravity through a nozzle and is immediately atomized by air jets. The resulting metal powders, which tend to be spherical, are collected in a chamber below.

The approach shown in Figure 15.5(c) is similar to (b), except that a high-velocity water stream is used instead of air. This is known as ***water atomization*** and is the most common of the atomization methods, particularly suited to metals that melt below 1600°C (2900°F). Cooling is more rapid, and the resulting powder shape is irregular rather than spherical. The disadvantage of using water is oxidation on the particle surface. A recent innovation involves the use of synthetic oil rather than water to reduce oxidation. In both air and water atomization processes, particle size is controlled largely by the velocity of the fluid stream; particle size is inversely related to velocity.

Several methods are based on ***centrifugal atomization***. In one approach, the ***rotating disk method*** shown in Figure 15.5(d), the liquid metal stream pours onto a rapidly rotating disk that sprays the metal in all directions to produce powders.

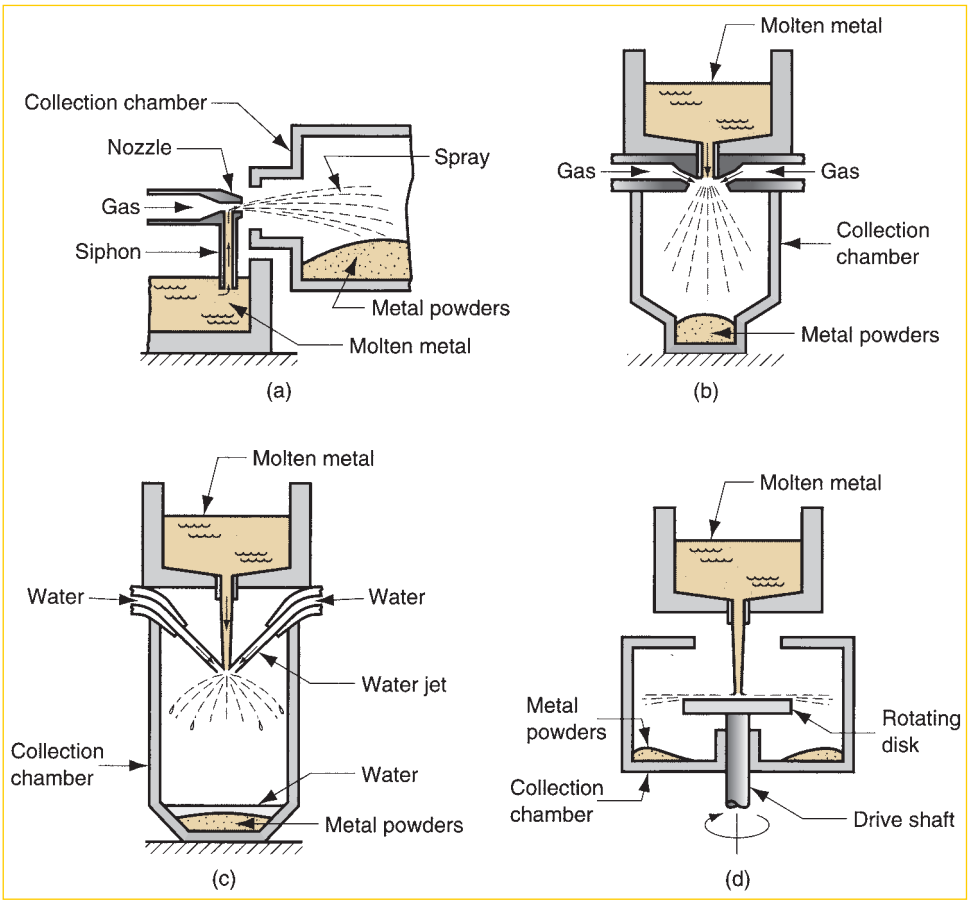

FIGURE 15.5 Several atomization methods for producing metallic powders: (a) and (b) two gas atomization methods; (c) water atomization; and (d) centrifugal atomization by the rotating disk method.

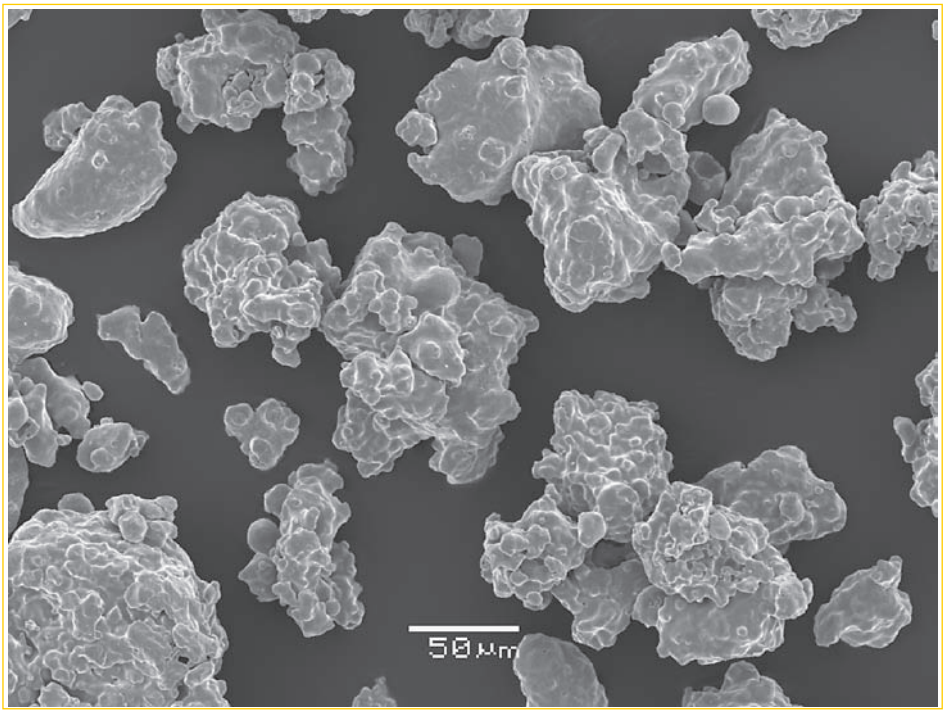

FIGURE 15.6 Iron powders produced by water atomization; particle sizes vary. (Photo courtesy of T. F. Murphy and Hoeganaes Corporation.)

15.2.2 OTHER PRODUCTION METHODS

Other metal powder production methods include various chemical reduction processes, precipitation methods, and electrolysis.

Chemical reduction includes a variety of chemical reactions by which metallic compounds are reduced to elemental metal powders. A common process involves liberation of metals from their oxides by use of reducing agents such as hydrogen or carbon monoxide. The reducing agent is made to combine with the oxygen in the compound to free the metallic element. This approach is used to produce powders of iron, tungsten, and copper. Another chemical process for iron powders involves the decomposition of iron pentacarbonyl ($Fe(Co)_5$) to produce spherical particles of high purity. Powders produced by this method are illustrated in the photomicrograph of Figure 15.6. Other chemical processes include ***precipitation*** of metallic elements from salts dissolved in water. Powders of copper, nickel, and cobalt can be produced by this approach.

In ***electrolysis***, an electrolytic cell is set up in which the source of the desired metal is the anode. The anode is slowly dissolved under an applied voltage, transported through the electrolyte, and deposited on the cathode. The deposit is removed, washed, and dried to yield a metallic powder of very high purity. The technique is used for producing powders of beryllium, copper, iron, silver, tantalum, and titanium.

5.3 Conventional Pressing and Sintering

After the metallic powders have been produced, the conventional PM sequence consists of three steps: (1) blending and mixing of the powders; (2) compaction, in which the powders are pressed into the desired part shape; and (3) sintering, which involves heating to a temperature below the melting point to cause solid-state

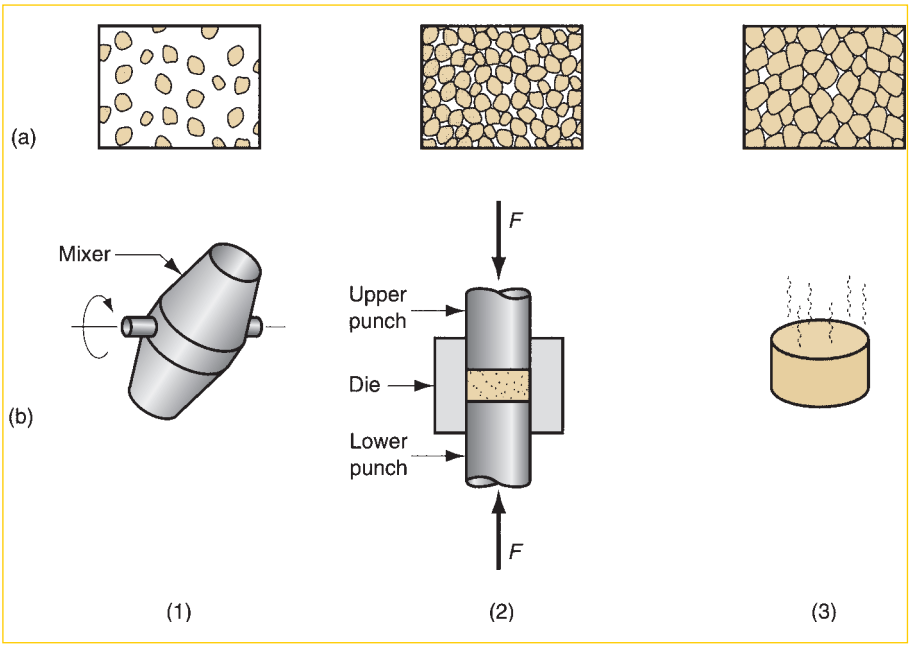

FIGURE 15.7 The conventional powder metallurgy production sequence: (1) blending, (2) compacting, and (3) sintering; (a) shows the condition of the particles while (b) shows the operation and/or work part during the sequence.

bonding of the particles and strengthening of the part. The three steps, sometimes referred to as primary operations in PM, are portrayed in Figure 15.7. In addition, secondary operations are sometimes performed to improve dimensional accuracy, increase density, and for other reasons.

15.3.1 BLENDING AND MIXING OF THE POWDERS

To achieve successful results in compaction and sintering, the metallic powders must be thoroughly homogenized beforehand. The terms blending and mixing are both used in this context. ***Blending*** refers to when powders of the same chemical composition but possibly different particle sizes are intermingled. Different particle sizes are often blended to reduce porosity. ***Mixing*** refers to powders of different chemistries being combined. An advantage of PM technology is the opportunity to mix various metals into alloys that would be difficult or impossible to produce by other means. The distinction between blending and mixing is not always precise in industrial practice.

Blending and mixing are accomplished by mechanical means. Four alternatives are illustrated in Figure 15.8: (a) rotation in a drum; (b) rotation in a double-cone container; (c) agitation in a screw mixer; and (d) stirring in a blade mixer. There is more science to these devices than one would suspect. Best results seem to occur when the container is between 20% and 40% full. The containers are usually designed with internal baffles or other ways of preventing free-fall during blending of powders of different sizes, because variations in settling rates between sizes result in segregation—just the opposite of what is wanted in blending. Vibration of the powder is undesirable, because it also causes segregation.

Other ingredients are usually added to the metallic powders during the blending and/or mixing step. These additives include (1) ***lubricants***, such as stearates of zinc and aluminum, in small amounts to reduce friction between particles and at the die wall

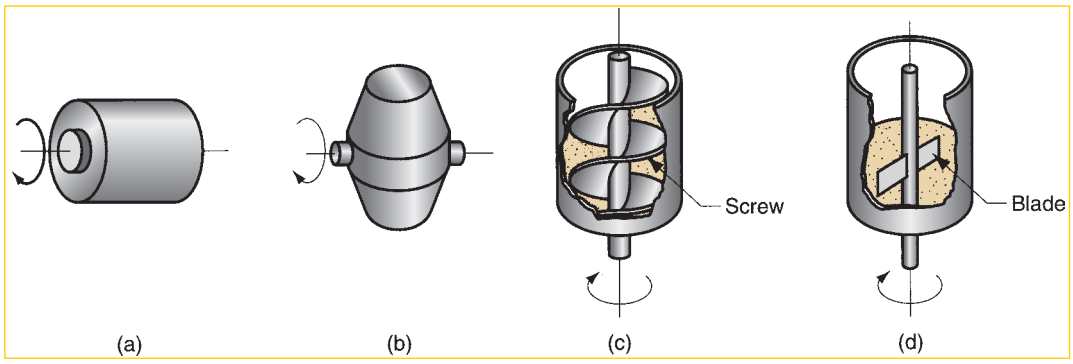

FIGURE 15.8 Several blending and mixing devices: (a) rotating drum, (b) rotating double-cone, (c) screw mixer, and (d) blade mixer.

during compaction; (2) ***binders***, which are required in some cases to achieve adequate strength in the pressed but unsintered part; and (3) ***deflocculants***, which inhibit agglomeration of powders for better flow characteristics during subsequent processing.

15.3.2 COMPACTION

In compaction, high pressure is applied to the powders to form them into the required shape. The conventional compaction method is ***pressing***, in which opposing punches squeeze the powders contained in a die. The steps in the pressing cycle are shown in Figure 15.9. The work part after pressing is called a ***green compact***, the word ***green*** meaning not yet fully processed. As a result of pressing, the density of the part, called the ***green density***, is much greater than the starting bulk density.

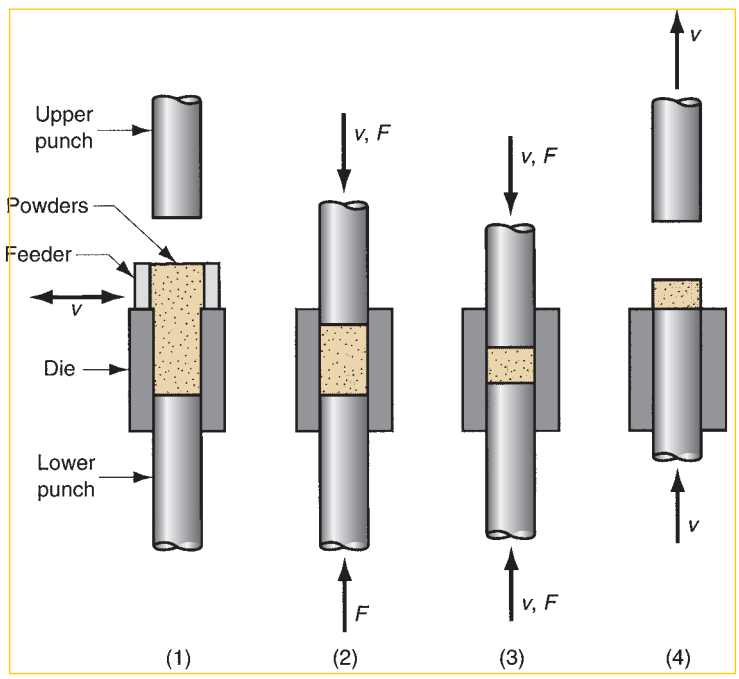

FIGURE 15.9 Pressing, the conventional method of compacting metal powders in PM: (1) filling the die cavity with powder, done by automatic feed in production, (2) initial, and (3) final positions of upper and lower punches during compaction, and (4) ejection of part.

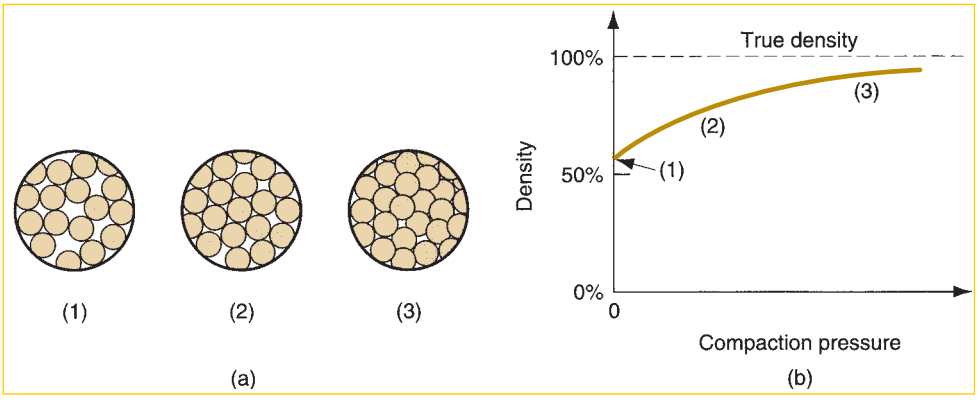

FIGURE 15.10 (a) Effect of applied pressure during compaction: (1) initial loose powders after filling, (2) repacking, and (3) deformation of particles; and (b) density of the powders as a function of pressure. The sequence here corresponds to steps 1, 2, and 3 in Figure 15.9.

The ***green strength*** of the part when pressed is adequate for handling but far less than that achieved after sintering.

The applied pressure in compaction results initially in repacking of the powders into a more efficient arrangement, eliminating "bridges" formed during filling, reducing pore space, and increasing the number of contacting points between particles. As pressure increases, the particles are plastically deformed, causing interparticle contact area to increase and additional particles to make contact. This is accompanied by a further reduction in pore volume. The progression is illustrated in three views in Figure 15.10 for starting particles of spherical shape. Also shown is the associated density represented by the three views as a function of applied pressure.

Presses used in conventional PM compaction are mechanical, hydraulic, or a combination of the two. A 450 kN (50 ton) hydraulic unit is shown in Figure 15.11. Because of differences in part complexity and associated pressing requirements, presses can be distinguished as (1) pressing from one direction, referred to as single-action presses; or (2) pressing from two directions, any of several types including opposed ram, double-action, and multiple action. Current available press technology can provide up to 10 separate action controls to produce parts of significant geometric complexity. Part complexity and other design issues are examined in Section 15.6.

The capacity of a press for PM production is generally given in tons or kN or MN. The required force for pressing depends on the projected area of the PM part (area in the horizontal plane for a vertical press) multiplied by the pressure needed to compact the given metal powders. Reducing this to equation form,

$$F = A_p p_c \tag{15.7}$$

where F = required force, N (lb); A_p = projected area of the part, mm^2 (in^2); and p_c = compaction pressure required for the given powder material, MPa (lb/in^2). Compaction pressures typically range from 70 MPa (10,000 lb/in^2) for aluminum powders to 700 MPa (100,000 lb/in^2) for iron and steel powders.

15.3.3 SINTERING

After pressing, the green compact lacks strength and hardness; it is easily crumbled under low stresses. ***Sintering*** is a heat treatment operation performed on the compact to bond its metallic particles, thereby increasing strength and hardness. The treatment

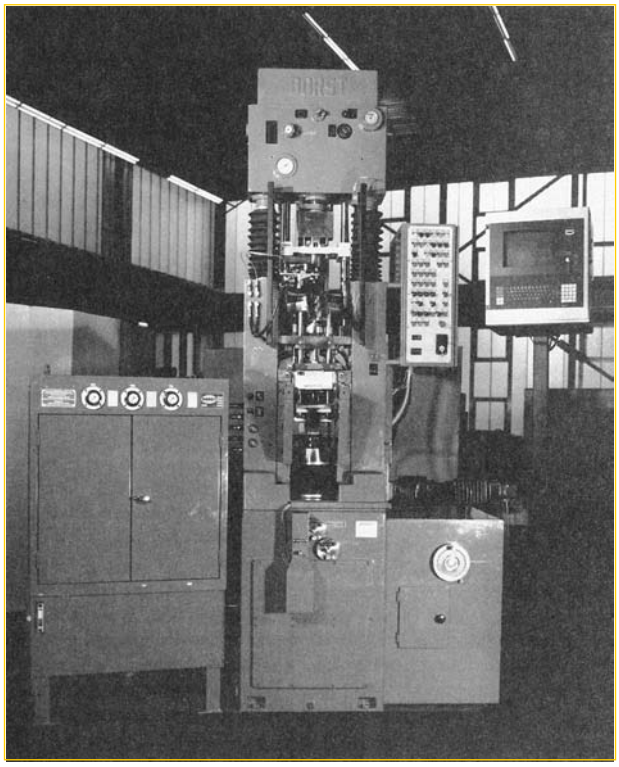

FIGURE 15.11 A 450-kN (50-ton) hydraulic press for compaction of powder metallurgy components. (Photo courtesy of Dorst America, Inc.)

is usually carried out at temperatures between 0.7 and 0.9 of the metal's melting point (absolute scale). The terms ***solid-state sintering*** or ***solid-phase sintering*** are sometimes used for this conventional sintering because the metal remains unmelted at these treatment temperatures.

It is generally agreed among researchers that the primary driving force for sintering is reduction of surface energy [6], [16]. The green compact consists of many distinct particles, each with its own individual surface, and so the total surface area contained in the compact is very high. Under the influence of heat, the surface area is reduced through the formation and growth of bonds between the particles, with associated reduction in surface energy. The finer the initial powder size, the higher the total surface area, and the greater the driving force behind the process.

The series of sketches in Figure 15.12 shows on a microscopic scale the changes that occur during sintering of metallic powders. Sintering involves mass transport to create the necks and transform them into grain boundaries. The principal mechanism by which this occurs is diffusion; other possible mechanisms include plastic flow. Shrinkage occurs during sintering as a result of pore size reduction. This depends to a large extent on the density of the green compact, which depends on the pressure during compaction. Shrinkage is generally predictable when processing conditions are closely controlled.

Because PM applications usually involve medium-to-high production, most sintering furnaces are designed with mechanized flow-through capability for the work parts. The heat treatment consists of three steps, accomplished in three chambers in these continuous furnaces: (1) preheat, in which lubricants and

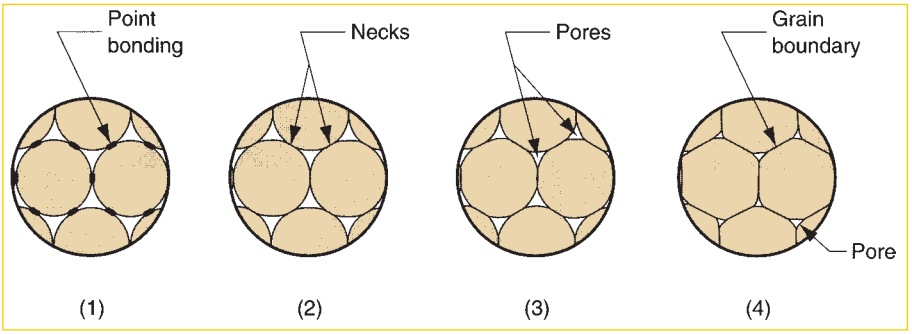

FIGURE 15.12 Sintering on a microscopic scale: (1) particle bonding is initiated at contact points; (2) contact points grow into "necks"; (3) the pores between particles are reduced in size; and (4) grain boundaries develop between particles in place of the necked regions.

binders are burned off; (2) sinter; and (3) cool down. The treatment is illustrated in Figure 15.13. Typical sintering temperatures and times are given for selected metals in Table 15.1.

In modern sintering practice, the atmosphere in the furnace is controlled. The purposes of a controlled atmosphere include (1) protection from oxidation, (2) providing a reducing atmosphere to remove existing oxides, (3) providing a carburizing atmosphere, and (4) assisting in removing lubricants and binders used in pressing. Common sintering furnace atmospheres are inert gas, nitrogen-based, dissociated ammonia, hydrogen, and natural gas [6]. Vacuum atmospheres are used for certain metals, such as stainless steel and tungsten.

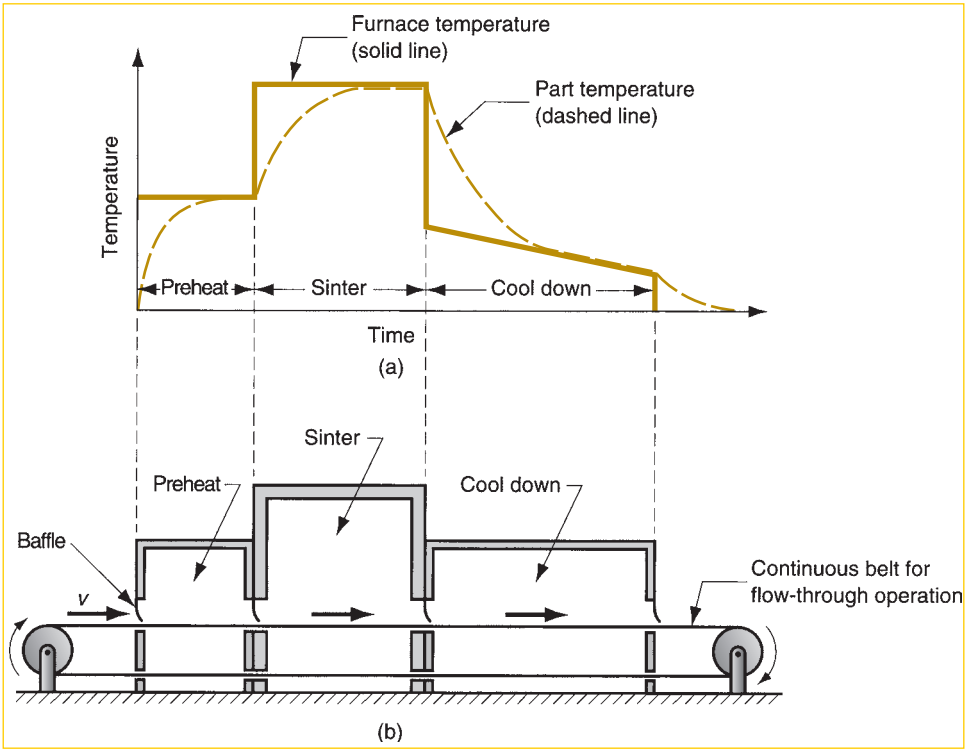

FIGURE 15.13 (a) Typical heat treatment cycle in sintering; and (b) schematic cross section of a continuous sintering furnace.

TABLE • 15.1 Typical sintering temperatures and times for selected powder metals.

Metal	Sintering Temperatures °C	Sintering Temperatures °F	Typical Time
Brass	850	1600	25 min
Bronze	820	1500	15 min
Copper	850	1600	25 min
Iron	1100	2000	30 min
Stainless steel	1200	2200	45 min
Tungsten	2300	4200	480 min

Compiled from [10] and [17].

15.3.4 SECONDARY OPERATIONS

PM secondary operations include densification, sizing, impregnation, infiltration, heat treatment, and finishing.

Densification and Sizing A number of secondary operations are performed to increase density, improve accuracy, or accomplish additional shaping of the sintered part. ***Repressing*** is a pressing operation in which the part is squeezed in a closed die to increase density and improve physical properties. ***Sizing*** is the pressing of a sintered part to improve dimensional accuracy. ***Coining*** is a pressworking operation on a sintered part to press details into its surface.

Some PM parts require ***machining*** after sintering. Machining is rarely done to size the part, but rather to create geometric features that cannot be achieved by pressing, such as internal and external threads, side holes, and other details.

Impregnation and Infiltration Porosity is a unique and inherent characteristic of powder metallurgy technology. It can be exploited to create special products by filling the available pore space with oils, polymers, or metals that have lower melting temperatures than the base powder metal.

Impregnation is the term used when oil or other fluid is permeated into the pores of a sintered PM part. The most common products of this process are oil-impregnated bearings, gears, and similar machinery components. Self-lubricating bearings, usually made of bronze or iron with 10% to 30% oil by volume, are widely used in the automotive industry. The treatment is accomplished by immersing the sintered parts in a bath of hot oil.

An alternative application of impregnation involves PM parts that must be made pressure tight or impervious to fluids. In this case, the parts are impregnated with various types of polymer resins that seep into the pore spaces in liquid form and then solidify. In some cases, resin impregnation is used to facilitate subsequent processing, for example, to permit the use of processing solutions (such as plating chemicals) that would otherwise soak into the pores and degrade the product, or to improve machinability of the PM work part.

Infiltration is an operation in which the pores of the PM part are filled with a molten metal. The melting point of the filler metal must be below that of the PM part. The process involves heating the filler metal in contact with the sintered component so

that capillary action draws the filler into the pores. The resulting structure is relatively nonporous, and the infiltrated part has a more uniform density, as well as improved toughness and strength. An application of the process is copper infiltration of iron PM parts.

Heat Treatment and Finishing Powder metal components can be heat treated (Chapter 26) and finished (electroplated or painted, Chapter 27) by most of the same processes used on parts produced by casting and other metalworking processes. Special care must be exercised in heat treatment because of porosity; for example, salt baths are not used for heating PM parts. Plating and coating operations are applied to sintered parts for appearance purposes and corrosion resistance. Again, precautions must be taken to avoid entrapment of chemical solutions in the pores; impregnation and infiltration are frequently used for this purpose. Common platings for PM parts include copper, nickel, chromium, zinc, and cadmium.

15.4 Alternative Pressing and Sintering Techniques

The conventional press and sinter sequence is the most widely used shaping technology in powder metallurgy. Additional methods for processing PM parts are discussed in this section.

15.4.1 ISOSTATIC PRESSING

A feature of conventional pressing is that pressure is applied uniaxially. This imposes limitations on part geometry, because metallic powders do not readily flow in directions perpendicular to the applied pressure. Uniaxial pressing also leads to density variations in the compact after pressing. In ***isostatic pressing***, pressure is applied from all directions against the powders that are contained in a flexible mold; hydraulic pressure is used to achieve compaction. Isostatic pressing takes two alternative forms: (1) cold isostatic pressing and (2) hot isostatic pressing.

Cold isostatic pressing (CIP) involves compaction performed at room temperature. The mold, made of rubber or other elastomer material, is oversized to compensate for shrinkage. Water or oil is used to provide the hydrostatic pressure against the mold inside the chamber. Figure 15.14 illustrates the processing sequence in cold isostatic pressing. Advantages of CIP include more uniform density, less expensive tooling, and greater applicability to shorter production runs. Good dimensional accuracy is difficult to achieve in isostatic pressing, because of the flexible mold. Consequently, subsequent finish shaping operations are often required to obtain the required dimensions, either before or after sintering.

Hot isostatic pressing (HIP) is carried out at high temperatures and pressures, using a gas such as argon or helium as the compression medium. The mold in which the powders are contained is made of sheetmetal to withstand the high temperatures. HIP accomplishes pressing and sintering in one step. Despite this apparent advantage, it is a relatively expensive process and its applications seem to be concentrated in the aerospace industry. PM parts made by HIP are characterized by high density (porosity near zero), thorough interparticle bonding, and good mechanical strength.

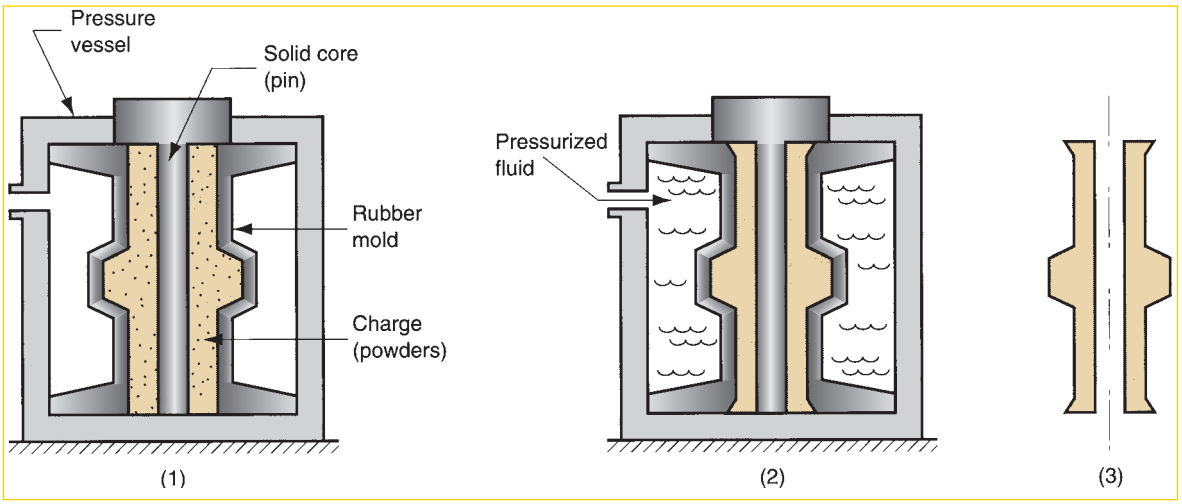

FIGURE 15.14 Cold isostatic pressing: (1) powders are placed in the flexible mold; (2) hydrostatic pressure is applied against the mold to compact the powders; and (3) pressure is reduced, and the part is removed.

15.4.2 POWDER INJECTION MOLDING

Injection molding is closely associated with the plastics industry (Section 13.6). The same basic process can be applied to form parts of metal or ceramic powders, the difference being that the starting polymer contains a high content of particulate matter, typically from 50% to 85% by volume. When used in powder metallurgy, the term ***metal injection molding*** (MIM) is used. The more general process is ***powder injection molding*** (PIM), which includes both metal and ceramic powders. The steps in MIM proceed as follows [7]: (1) Metallic powders are mixed with an appropriate binder. (2) Granular pellets are formed from the mixture. (3) The pellets are heated to molding temperature, injected into a mold cavity, and the part is cooled and removed from the mold. (4) The part is processed to remove the binder using any of several thermal or solvent techniques. (5) The part is sintered. (6) Secondary operations are performed as appropriate.

The binder in powder injection molding acts as a carrier for the particles. Its functions are to provide proper flow characteristics during molding and hold the powders in the molded shape until sintering. The five basic types of binders in PIM are (1) thermosetting polymers, such as phenolics; (2) thermoplastic polymers, such as polyethylene; (3) water; (4) gels; and (5) inorganic materials [7]. Polymers are the most frequently used.

Powder injection molding is suited to part geometries similar to those in plastic injection molding. It is not cost competitive for simple axisymmetric parts, because the conventional press-and-sinter process is quite adequate for these cases. PIM seems most economical for small, complex parts of high value. Dimensional accuracy is limited by the shrinkage that accompanies densification during sintering.

15.4.3 POWDER ROLLING, EXTRUSION, AND FORGING

Rolling, extrusion, and forging are familiar bulk deformation processes (Chapter 18). Their applications are described here in the context of powder metallurgy.

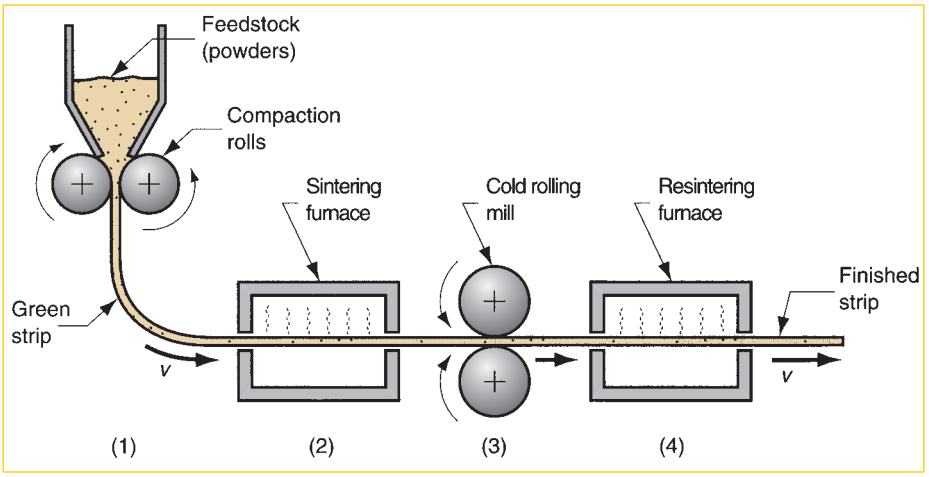

FIGURE 15.15 Powder rolling: (1) powders are fed through compaction rolls to form a green strip; (2) sintering; (3) cold rolling; and (4) resintering.

Powder Rolling Powders can be compressed in a rolling mill operation to form metal strip stock. The process is usually set up to run continuously or semicontinuously, as shown in Figure 15.15. The metallic powders are compacted between rolls into a green strip that is fed directly into a sintering furnace. It is then cold rolled and resintered.

Powder Extrusion In the most popular PM extrusion method, powders are placed in a vacuum-tight sheet metal can, heated, and extruded with the container. In another variation, billets are preformed by a conventional press and sinter process, and then the billet is hot extruded. These methods achieve a high degree of densification in the PM product.

Powder Forging In powder forging, the starting work part is a powder metallurgy part preformed to proper size by pressing and sintering. Advantages of this approach are: (1) densification of the PM part, (2) lower tooling costs and fewer forging "hits" (and therefore higher production rate) because the starting work part is preformed, and (3) reduced material waste.

15.4.4 COMBINED PRESSING AND SINTERING

Hot isostatic pressing (Section 15.4.1) accomplishes compaction and sintering in one step. Other techniques that combine the two steps are hot pressing and spark sintering.

Hot Pressing The setup in uniaxial hot pressing is very similar to conventional PM pressing, except that heat is applied during compaction. The resulting product is generally dense, strong, hard, and dimensionally accurate. Despite these advantages, the process presents certain technical problems that limit its adoption. Principal among these are (1) selecting a suitable mold material that can withstand the high sintering temperatures; (2) longer production cycle required to accomplish sintering; and (3) heating and maintaining atmospheric control in the process [2]. Hot pressing has found some application in the production of sintered carbide products using graphite molds.

Spark Sintering An alternative approach that combines pressing and sintering but overcomes some of the problems in hot pressing is spark sintering. The process consists of two basic steps [2], [17]: (1) powder or a green compacted preform is placed in a die; and (2) upper and lower punches, which also serve as electrodes, compress the part and simultaneously apply a high-energy electrical current that burns off surface contaminants and sinters the powders, forming a dense, solid part in about 15 seconds. The process has been applied to a variety of metals.

15.4.5 LIQUID PHASE SINTERING

Conventional sintering (Section 15.3.3) is solid-state sintering; the metal is sintered at a temperature below its melting point. In systems involving a mixture of two powder metals, in which there is a difference in melting temperature between the metals, an alternative type of sintering is used, called liquid phase sintering. In this process, the two powders are initially mixed, and then heated to a temperature that is high enough to melt the lower-melting-point metal but not the other. The melted metal thoroughly wets the solid particles, creating a dense structure with strong bonding between the metals upon solidification. Depending on the metals involved, prolonged heating may result in alloying of the metals by gradually dissolving the solid particles into the liquid melt and/or diffusion of the liquid metal into the solid. In either case, the resulting product is fully densified (no pores) and strong. Examples of systems that involve liquid phase sintering include Fe–Cu, W–Cu, and Cu–Co [6].

5.5 Materials and Products for Powder Metallurgy

The raw materials for PM processing are more expensive than for other metalworking because of the additional energy required to reduce the metal to powder form. Accordingly, PM is competitive only in a certain range of applications. This section identifies the materials and products that seem most suited to powder metallurgy.

Powder Metallurgy Materials From a chemistry standpoint, metal powders can be classified as either elemental or pre-alloyed. ***Elemental*** powders consist of a pure metal and are used in applications in which high purity is important. For example, pure iron might be used where its magnetic properties are important. The most common elemental powders are those of iron, aluminum, and copper.

Elemental powders are also mixed with other metal powders to produce special alloys that are difficult to formulate using conventional processing methods. Tool steels are an example; PM permits blending of ingredients that is difficult or impossible by traditional alloying techniques. Using mixtures of elemental powders to form an alloy provides a processing benefit, even where special alloys are not involved. Because the powders are pure metals, they are not as strong as pre-alloyed metals. Therefore, they deform more readily during pressing, so that density and green strength are higher than with pre-alloyed compacts.

In ***pre-alloyed*** powders, each particle is an alloy composed of the desired chemical composition. Pre-alloyed powders are used for alloys that cannot be formulated by mixing elemental powders; stainless steel is an important example. The most common pre-alloyed powders are certain copper alloys, stainless steel, and high-speed steel.

The commonly used elemental and pre-alloyed powdered metals, in approximate order of tonnage usage, are: (1) iron, by far the most widely used PM metal, frequently mixed with graphite to make steel parts, (2) aluminum, (3) copper and its alloys, (4) nickel, (5) stainless steel, (6) high-speed steel, and (7) other PM materials such as tungsten, molybdenum, titanium, tin, and precious metals.

Powder Metallurgy Products A substantial advantage offered by PM technology is that parts can be made to near net shape or net shape; they require little or no additional shaping after PM processing. Some of the components commonly manufactured by powder metallurgy are gears, bearings, sprockets, fasteners, electrical contacts, cutting tools, and various machinery parts. When produced in large quantities, metal gears and bearings are particularly well suited to PM for two reasons: (1) the geometry is defined principally in two dimensions, so the part has a top surface of a certain shape, but there are no features along the sides; and (2) there is a need for porosity in the material to serve as a reservoir for lubricant. More complex parts with true three-dimensional geometries are also feasible in powder metallurgy, by adding secondary operations such as machining to complete the shape of the pressed and sintered part, and by observing certain design guidelines such as those outlined in the following section.

15.6 Design Considerations in Powder Metallurgy

Use of PM techniques is generally suited to a certain class of production situations and part designs. This section defines the characteristics of this class of applications for which powder metallurgy is most appropriate.

The Metal Powder Industries Federation (MPIF) defines four classes of powder metallurgy part designs, by level of difficulty in conventional pressing. The system is useful because it indicates some of the limitations on shape that can be achieved with conventional PM processing. The four part classes are illustrated in Figure 15.16.

The MPIF classification system provides some guidance concerning part geometries suited to conventional PM pressing techniques. Additional advice is offered in the following design guidelines, compiled from [3], [13], and [17].

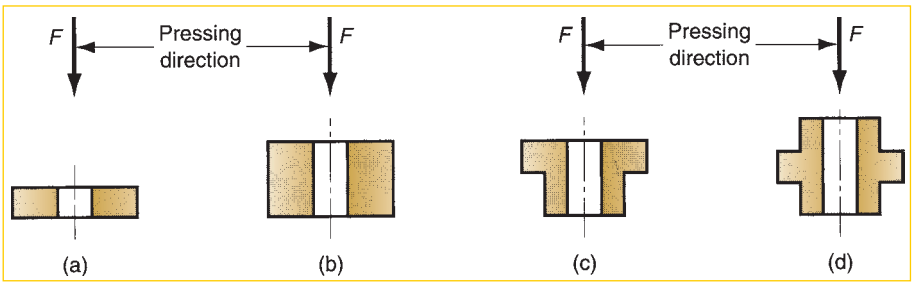

FIGURE 15.16 Four classes of PM parts side view shown; cross section is circular (a) Class I—simple thin shapes that can be pressed from one direction; (b) Class II—simple but thicker shapes that require pressing from two directions; (c) Class III—two levels of thickness, pressed from two directions; and (d) Class IV—multiple levels of thickness, pressed from two directions, with separate controls for each level to achieve proper densification throughout the compact.

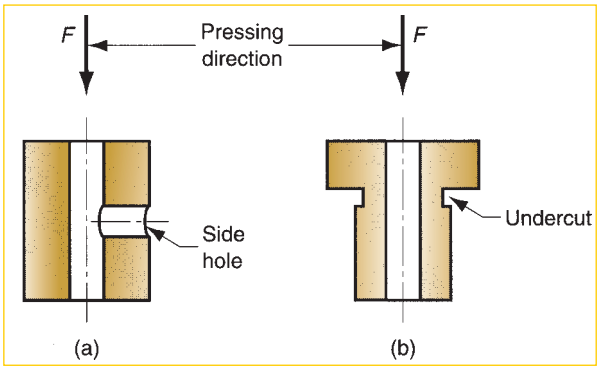

FIGURE 15.17 Part features to be avoided in PM: (a) side holes and (b) side undercuts. Part ejection is impossible.

- Economics of PM processing usually require large part quantities to justify the cost of equipment and special tooling required. Minimum quantities of 10,000 units are suggested [17], although exceptions exist.
- Powder metallurgy is unique in its capability to fabricate parts with a controlled level of porosity. Porosities up to 50% are possible.
- PM can be used to make parts out of unusual metals and alloys—materials that would be difficult if not impossible to fabricate by other means.
- The geometry of the part must permit ejection from the die after pressing; this generally means that the part must have vertical or near-vertical sides, although steps in the part are permissible as suggested by the MPIF classification system (Figure 15.16). Design features such as undercuts and holes on the part sides, as shown in Figure 15.17, must be avoided. Vertical undercuts and holes, as in Figure 15.18, are permissible because they do not interfere with ejection. Vertical holes can be of cross-sectional shapes other than round (e.g., squares, keyways) without significant increases in tooling or processing difficulty.
- Screw threads cannot be fabricated by PM pressing; if required, they must be machined into the PM component after sintering.
- Chamfers and corner radii are possible by PM pressing, as shown in Figure 15.19. Problems are encountered in punch rigidity when angles are too acute.
- Wall thickness should be a minimum of 1.5 mm (0.060 in) between holes or a hole and the outside part wall, as indicated in Figure 15.20. Minimum recommended hole diameter is 1.5 mm (0.060 in).

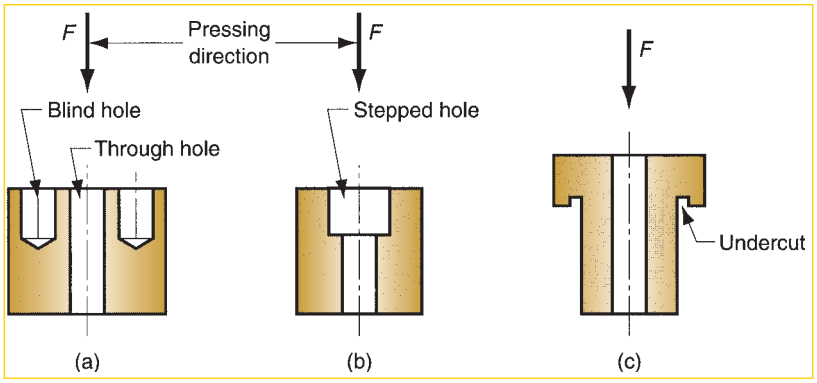

FIGURE 15.18 Permissible part features in PM: (a) vertical hole, blind and through, (b) vertical stepped hole, and (c) undercut in vertical direction. These features allow part ejection.

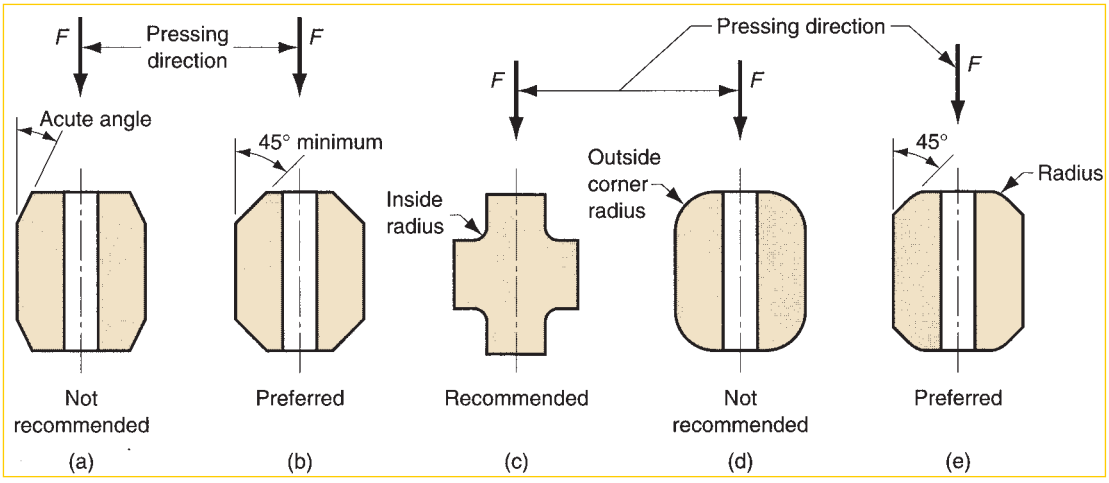

FIGURE 15.19 Chamfers and corner radii are accomplished, but certain rules should be observed: (a) avoid acute chamfer angles; (b) larger angles are preferred for punch rigidity; (c) small inside radius is desirable; (d) full outside corner radius is difficult because punch is fragile at corner's edge; (e) outside corner problem can be solved by combining radius and chamfer.

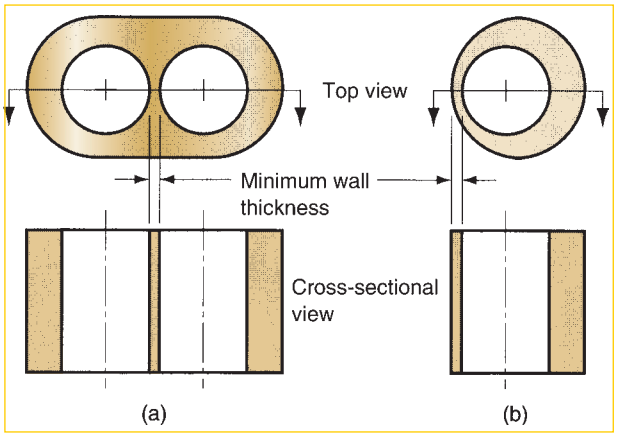

FIGURE 15.20 Minimum recommended wall thickness (a) between holes or (b) between a hole and an outside wall should be 1.5 mm (0.060 in).

References

[1] ***ASM Handbook***, Vol. 7: ***Powder Metal Technologies and Applications***. ASM International, Materials Park, Ohio, 1998.

[2] Amstead, B. H., Ostwald, P. F., and Begeman, M. L. ***Manufacturing Processes***, 8th ed. John Wiley & Sons, New York, 1987.

[3] Bralla, J. G. (ed.). ***Design for Manufacturability Handbook***, 2nd ed. McGraw-Hill, New York, 1998.

[4] Bulger, M. "Metal Injection Molding," ***Advanced Materials & Processes***, March 2005, pp. 39–40.

[5] Dixon, R. H. T., and Clayton, A. ***Powder Metallurgy for Engineers***. The Machinery Publishing Co. Brighton, U.K., 1971.

[6] German, R. M. ***Powder Metallurgy Science***, 2nd ed. Metal Powder Industries Federation, Princeton, New Jersey, 1994.

[7] German, R. M. ***Powder Injection Molding***. Metal Powder Industries Federation, Princeton, New Jersey, 1990.

[8] German, R. M. ***A-Z of Powder Metallurgy***. Elsevier Science, Amsterdam, Netherlands, 2006.