16 MHz x 32 = 512 MHz PLL

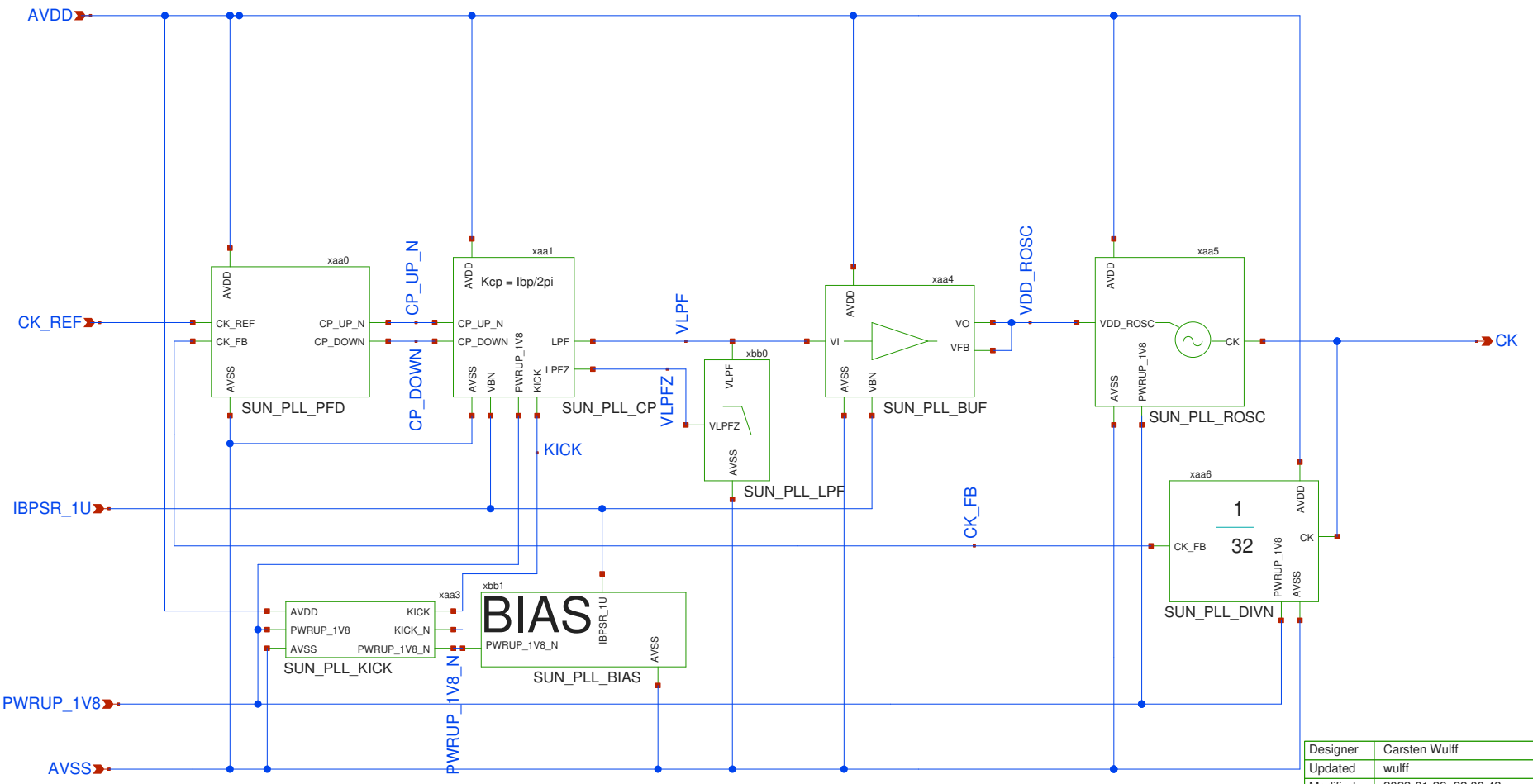

Designer	Carsten Wulff
Updated	wulff
Modified	2023-01-22 22:00:43
Copyright	Carsten Wulff Software

Library/Cell	SUN_PLL