Contents Lecture 4

Greedy graph algorithms

- Dijkstra's algorithm
- Jarnik's algorithm (a.k.a. Prim's algorithm)
- Kruskal's algorithm
- Union-find data structure with path compression

Shortest paths

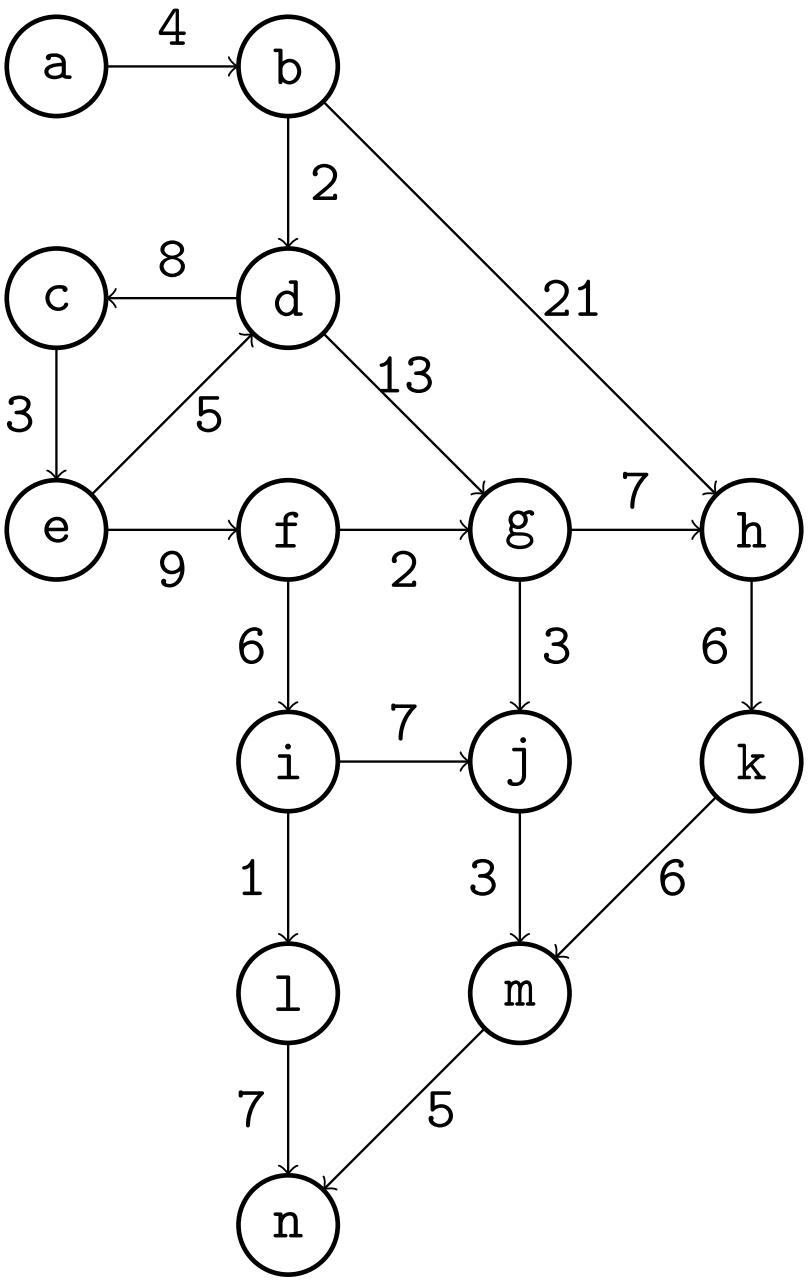

- What is the shortest path from a to n?
- To every other node?
- How can we find these paths efficiently?
- For navigation, the edge weights are positive distances (obviously)
- For some other graphs the weights can be a positive or negative cost
- The problem is easier with positive weights

Dijkstra's algorithm

- Given a directed graph $G(V, E)$, a weight function $w : E \to R$, and a node $s \in V$, Dijkstra's algorithm computes the shortest paths from s to every other node
- The sum of all edge weights on a path should be minimized
- A weight can e.g. mean metric distance, cost, or travelling time
- For this algorithm, we assume the weights are nonnegative numbers

Dijkstra's algorithm — overview

- input $w(e)$ weight of edge $e = (u, v)$. We also write $w(u, v)$
- output $d(v)$ shortest path distance from s to v for $v \in V$
- output $pred(v)$ predecessor of v in shortest path from s to $v \in V$
- A set Q of nodes for which we have not yet found the shortest path
- A set S of nodes for which we have already found the shortest path

procedure *dijkstra* (G, s)
  $d(s) \leftarrow 0$
  $Q \leftarrow V - \{s\}$
  $S \leftarrow \{s\}$
  while $Q \neq \emptyset$
    select v which minimizes $d(u) + w(e)$ where $u \in S, v \notin S, e = (u, v)$
    $d(v) \leftarrow d(u) + w(e)$
    $pred(v) \leftarrow u$
    remove v from Q
    add v to S

Shortest paths

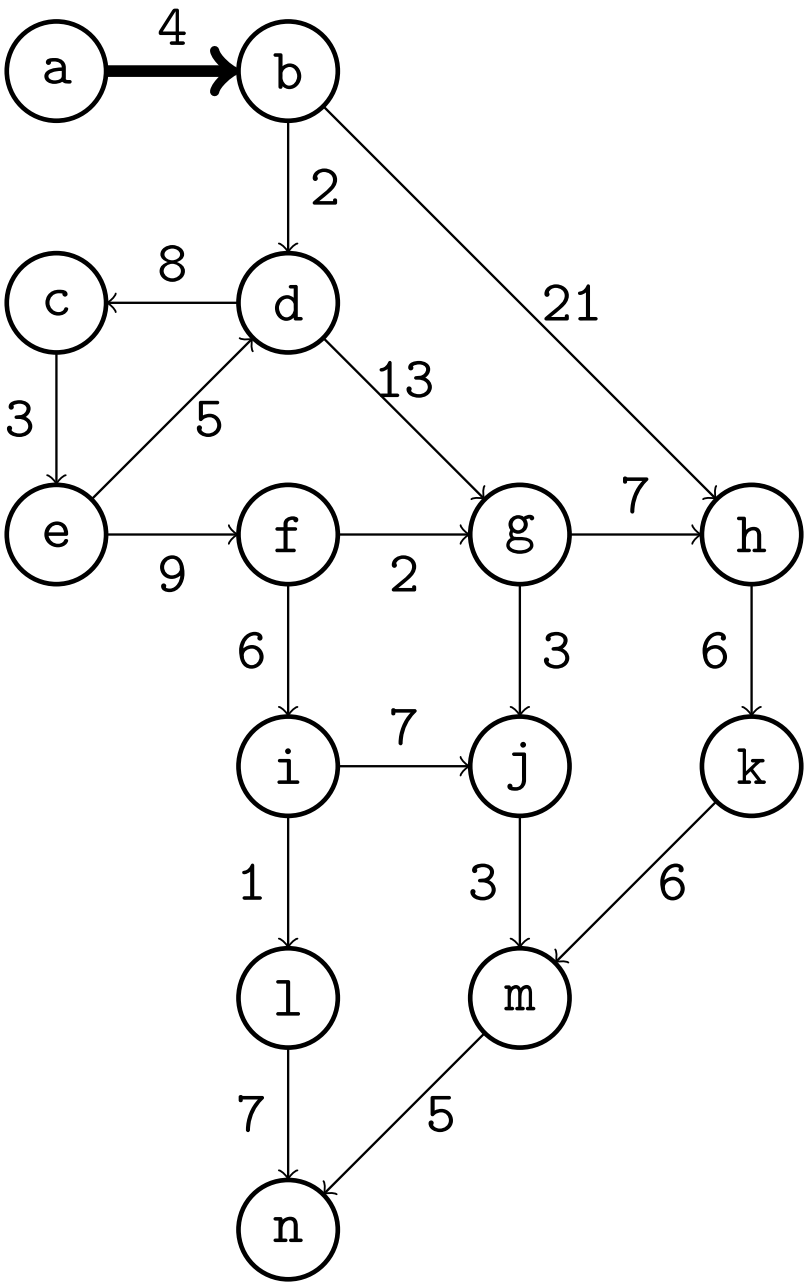

- Only b has a predecessor in S
- $d(b) \leftarrow 4$
- $pred(b) \leftarrow a$
- $S \leftarrow \{a, b\}$

Shortest paths

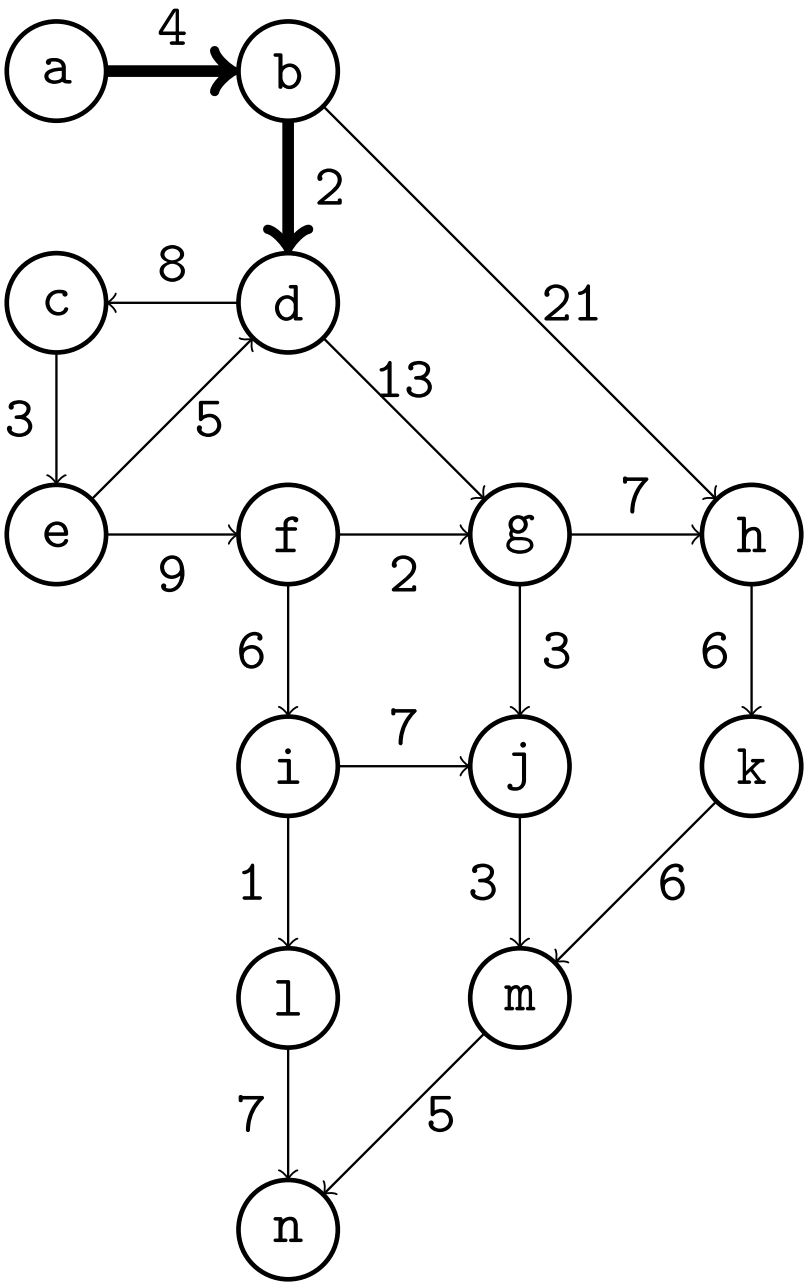

- $d(b) + w(b, d) = 4 + 2 = 6$
- $d(b) + w(b, h) = 4 + 21 = 25$
- d minimizes $d(u) + w(u, v)$
- $d(d) \leftarrow 6$
- $pred(d) \leftarrow b$
- $S \leftarrow \{a, b, d\}$

Shortest paths

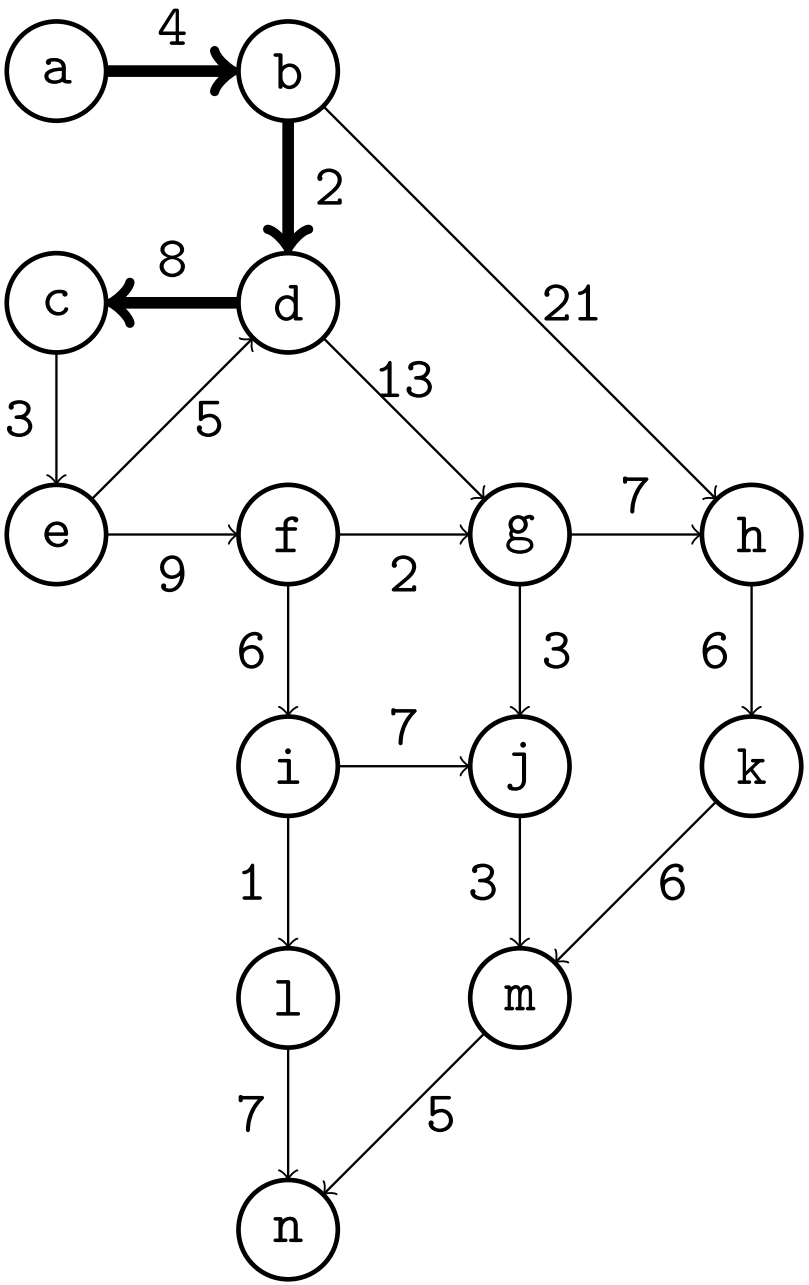

- $d(b) + w(b, h) = 4 + 21 = 25$
- $d(d) + w(d, c) = 6 + 8 = 14$
- $d(d) + w(d, g) = 6 + 13 = 19$
- c minimizes $d(u) + w(u, v)$
- $d(c) \leftarrow 14$
- $pred(c) \leftarrow d$
- $S \leftarrow \{a, b, c, d\}$

Shortest paths

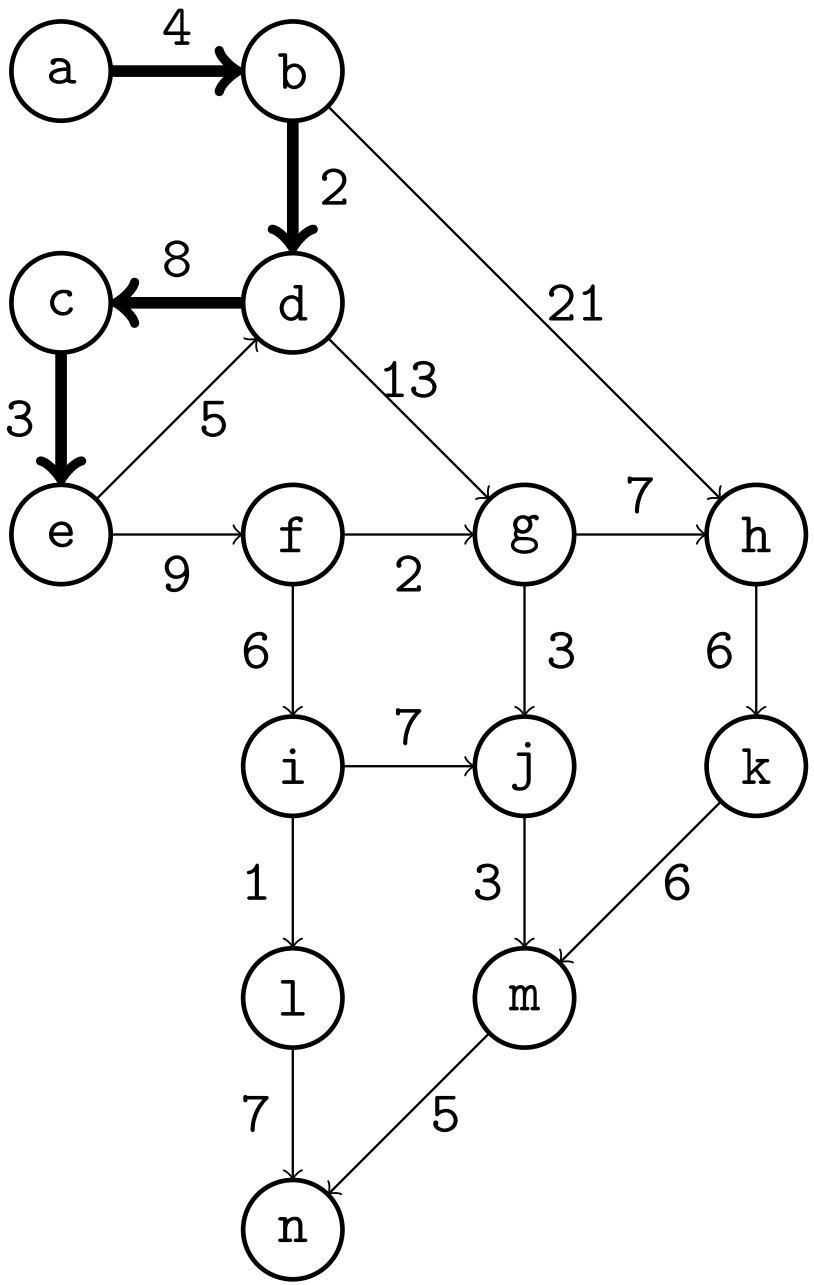

- $d(b) + w(b, h) = 4 + 21 = 25$
- $d(d) + w(d, g) = 6 + 13 = 19$
- $d(c) + w(c, e) = 14 + 3 = 17$
- e minimizes $d(u) + w(u, v)$
- $d(e) \leftarrow 17$
- $pred(e) \leftarrow c$
- $S \leftarrow \{a, b, c, d, e\}$

Shortest paths

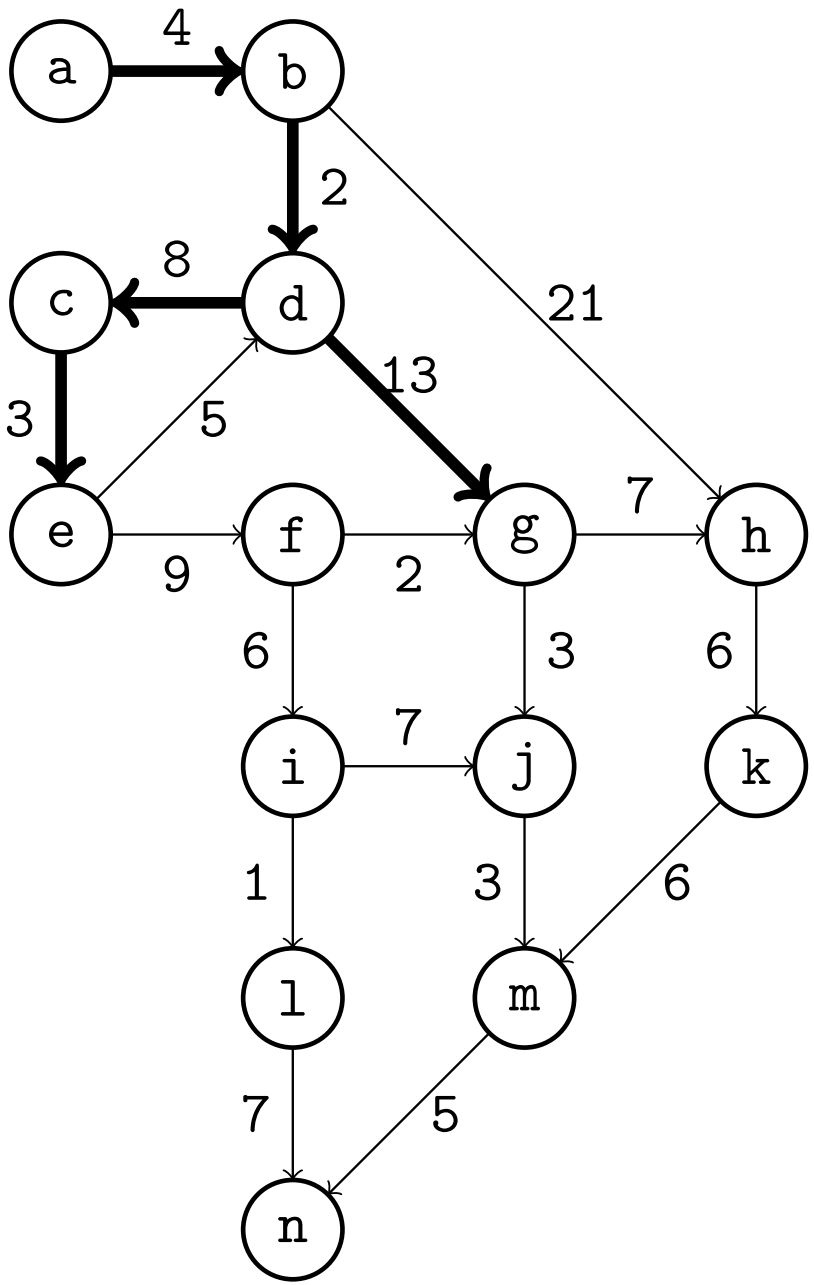

- $d(b) + w(b, h) = 4 + 21 = 25$
- $d(d) + w(d, g) = 6 + 13 = 19$
- $d(e) + w(e, f) = 17 + 9 = 26$
- g minimizes $d(u) + w(u, v)$
- $d(g) \leftarrow 19$
- $pred(g) \leftarrow d$
- $S \leftarrow \{a, b, c, d, e, g\}$

Shortest paths

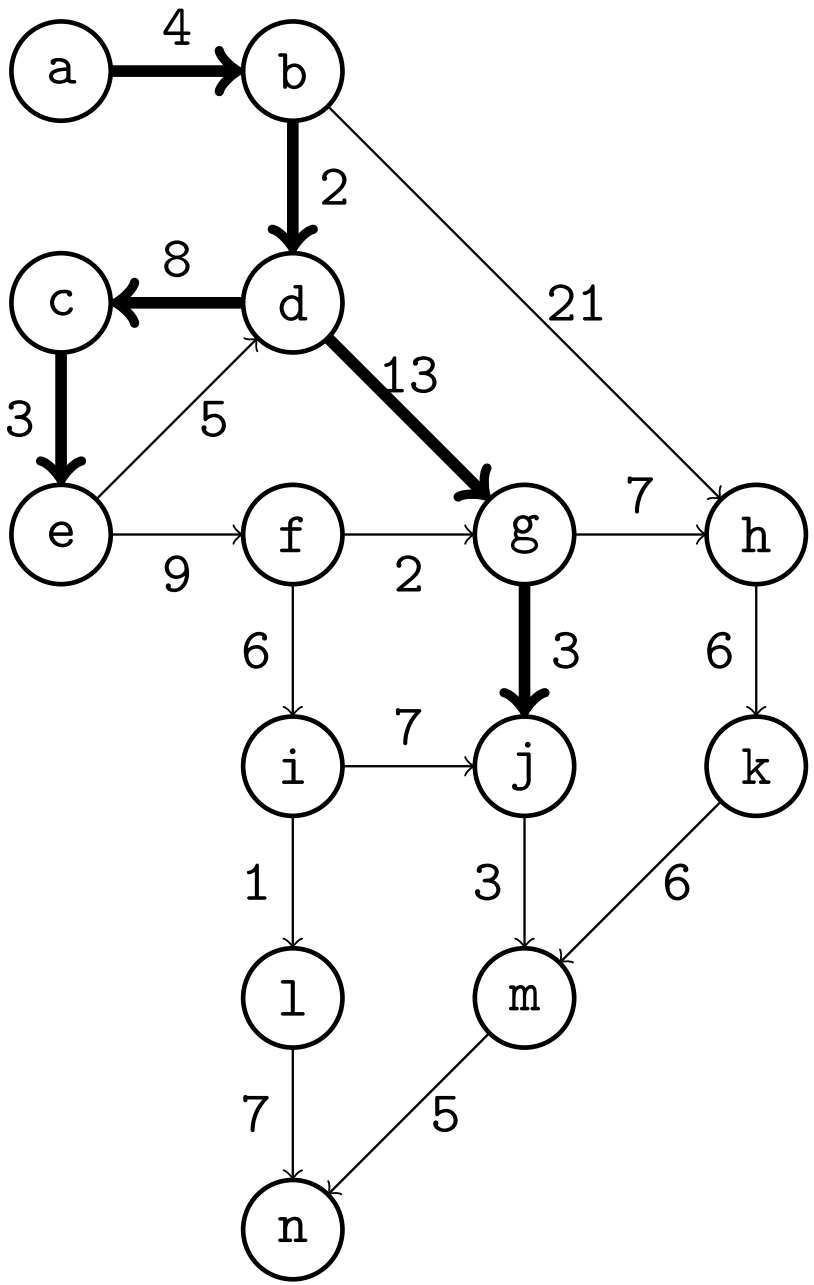

- $d(b) + w(b, h) = 4 + 21 = 25$
- $d(e) + w(e, f) = 17 + 9 = 26$
- $d(g) + w(g, h) = 19 + 7 = 26$
- $d(g) + w(g, j) = 19 + 3 = 22$
- j minimizes $d(u) + w(u, v)$
- $d(j) \leftarrow 22$
- $pred(j) \leftarrow g$
- $S \leftarrow \{a, b, c, d, e, g, j\}$

Shortest paths

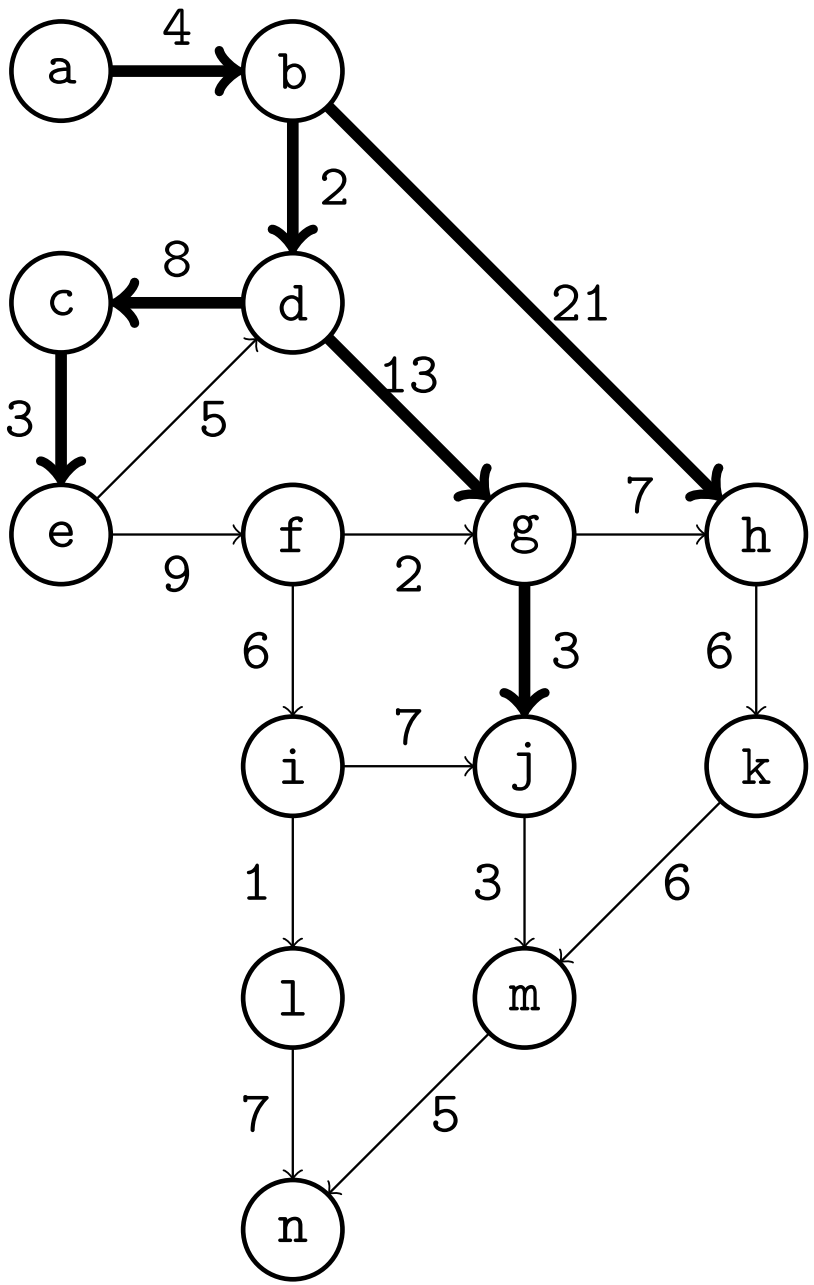

- $d(b) + w(b, h) = 4 + 21 = 25$
- $d(e) + w(e, f) = 17 + 9 = 26$
- $d(g) + w(g, h) = 19 + 7 = 26$
- $d(j) + w(j, m) = 22 + 3 = 25$
- h and m minimize $d(u) + w(u, v)$
- We can take any of them
- $d(h) \leftarrow 25$
- $pred(h) \leftarrow b$
- $S \leftarrow \{a, b, c, d, e, g, h, j\}$

Shortest paths

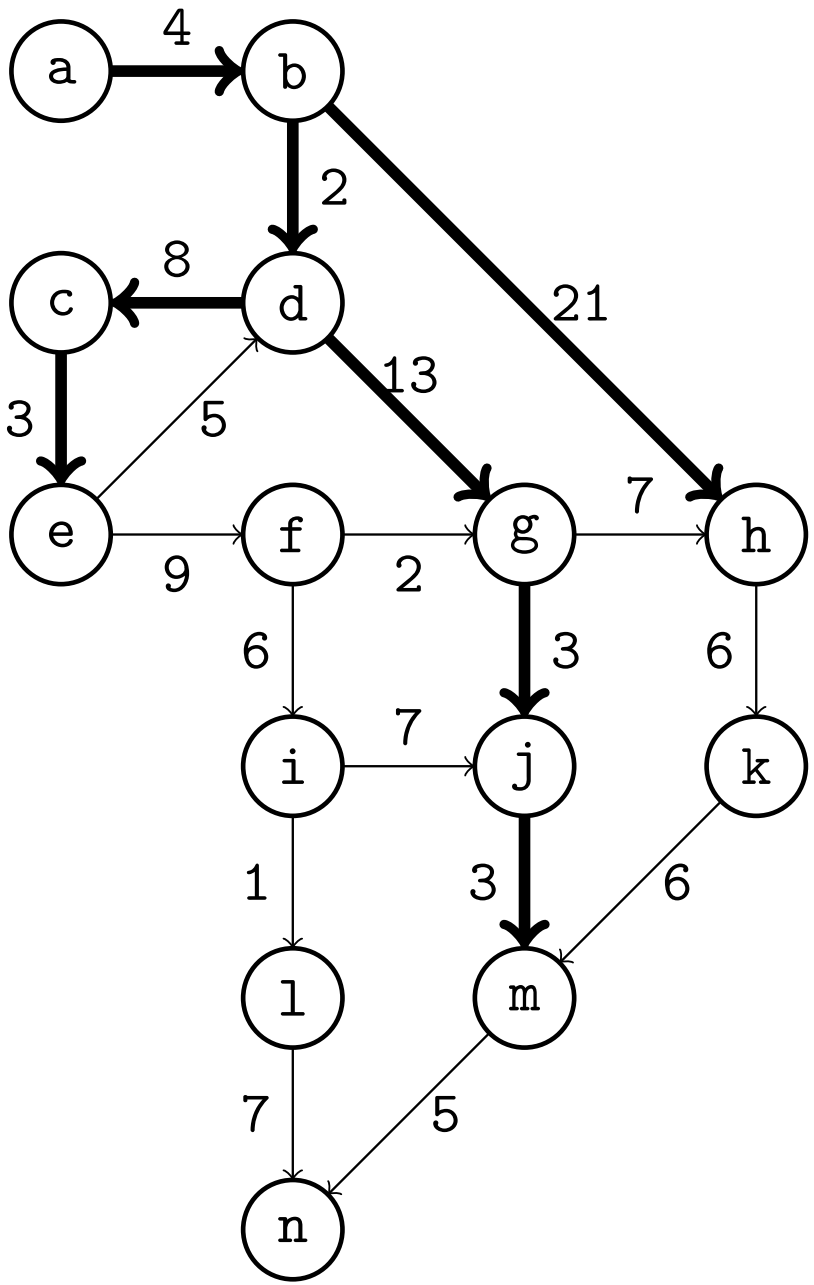

- $d(e) + w(e, f) = 17 + 9 = 26$
- $d(j) + w(j, m) = 22 + 3 = 25$
- $d(h) + w(h, k) = 25 + 6 = 27$
- m minimizes $d(u) + w(u, v)$
- $d(m) \leftarrow 25$
- $pred(m) \leftarrow j$
- $S \leftarrow \{a, b, c, d, e, g, h, j, m\}$

Shortest paths

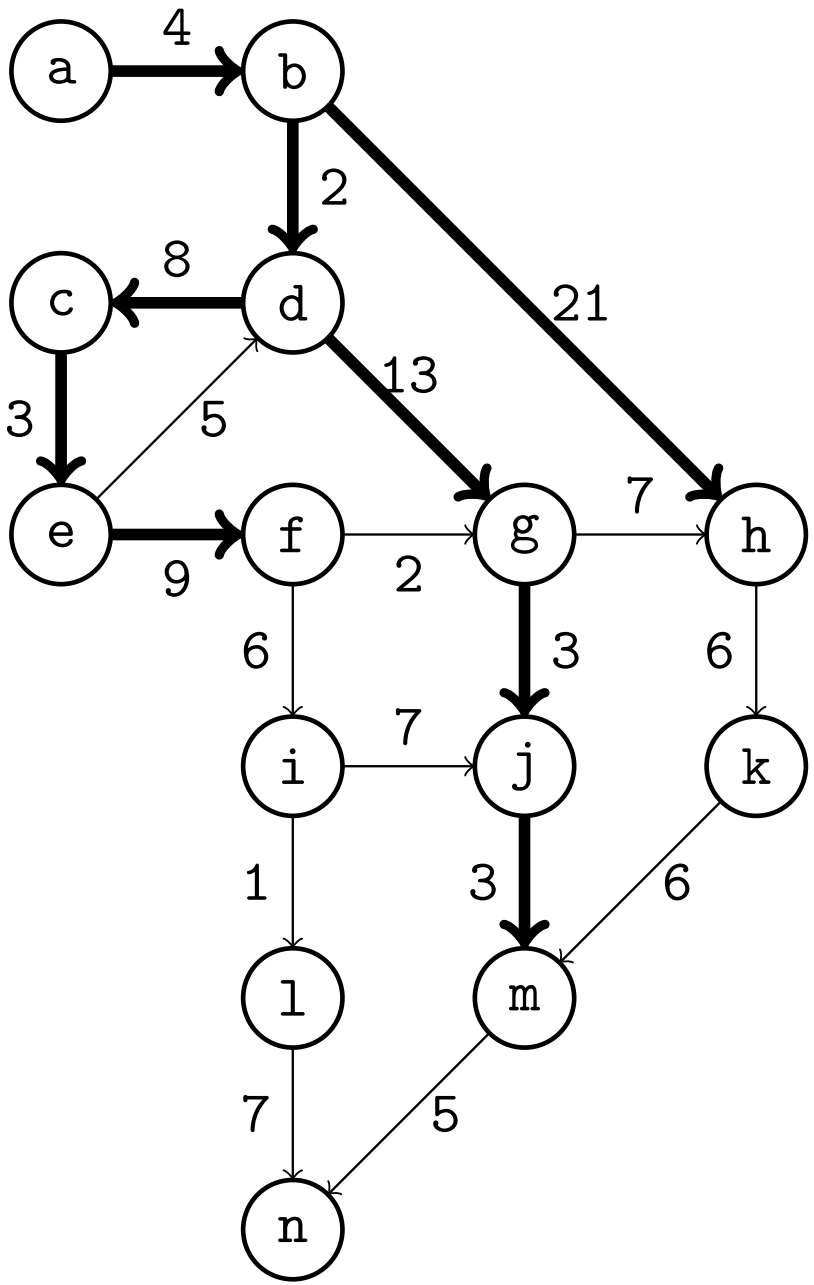

- $d(e) + w(e, f) = 17 + 9 = 26$
- $d(h) + w(h, k) = 25 + 6 = 27$
- $d(m) + w(m, n) = 25 + 5 = 30$
- f minimizes $d(u) + w(u, v)$
- $d(f) \leftarrow 26$
- $pred(f) \leftarrow e$
- $S \leftarrow \{a, b, c, d, e, f, g, h, j, m\}$

Shortest paths

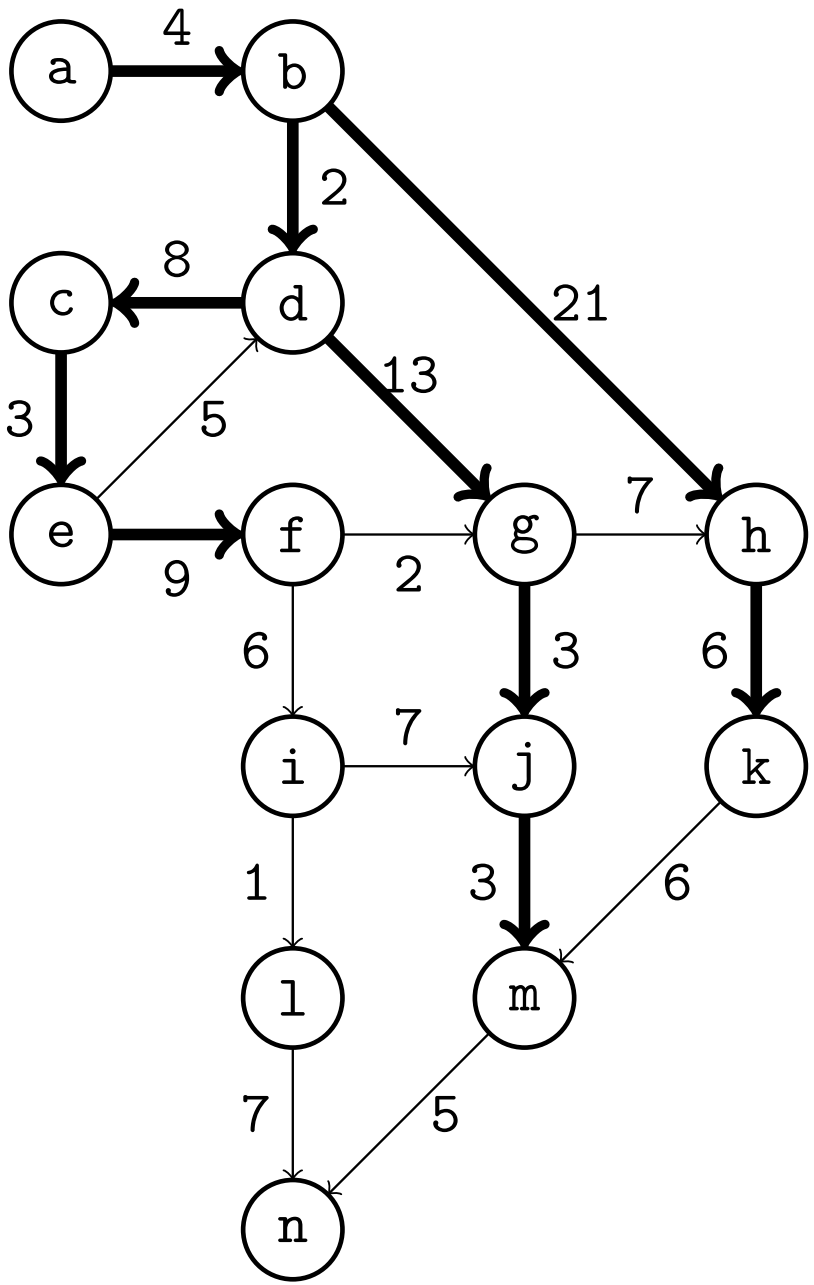

- $d(h) + w(h, k) = 25 + 6 = 27$
- $d(m) + w(m, n) = 25 + 5 = 30$
- $d(f) + w(f, i) = 26 + 6 = 32$
- k minimizes $d(u) + w(u, v)$
- $d(k) \leftarrow 27$
- $pred(k) \leftarrow h$
- $S \leftarrow \{a - h, j, k, m\}$

Shortest paths

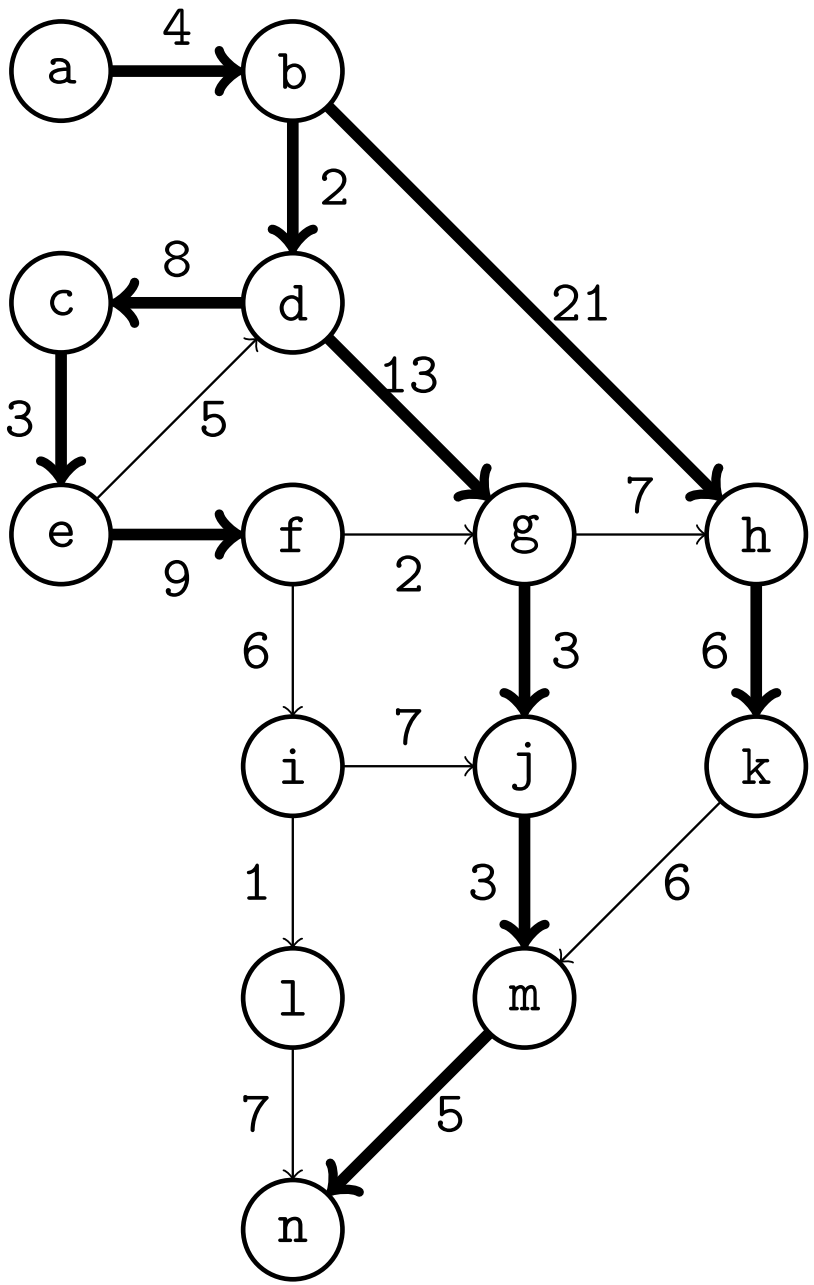

- $d(m) + w(m, n) = 25 + 5 = 30$
- $d(f) + w(f, i) = 26 + 6 = 32$
- n minimizes $d(u) + w(u, v)$
- $d(n) \leftarrow 30$
- $pred(k) \leftarrow h$
- $S \leftarrow \{a - k, m, n\}$

Shortest paths

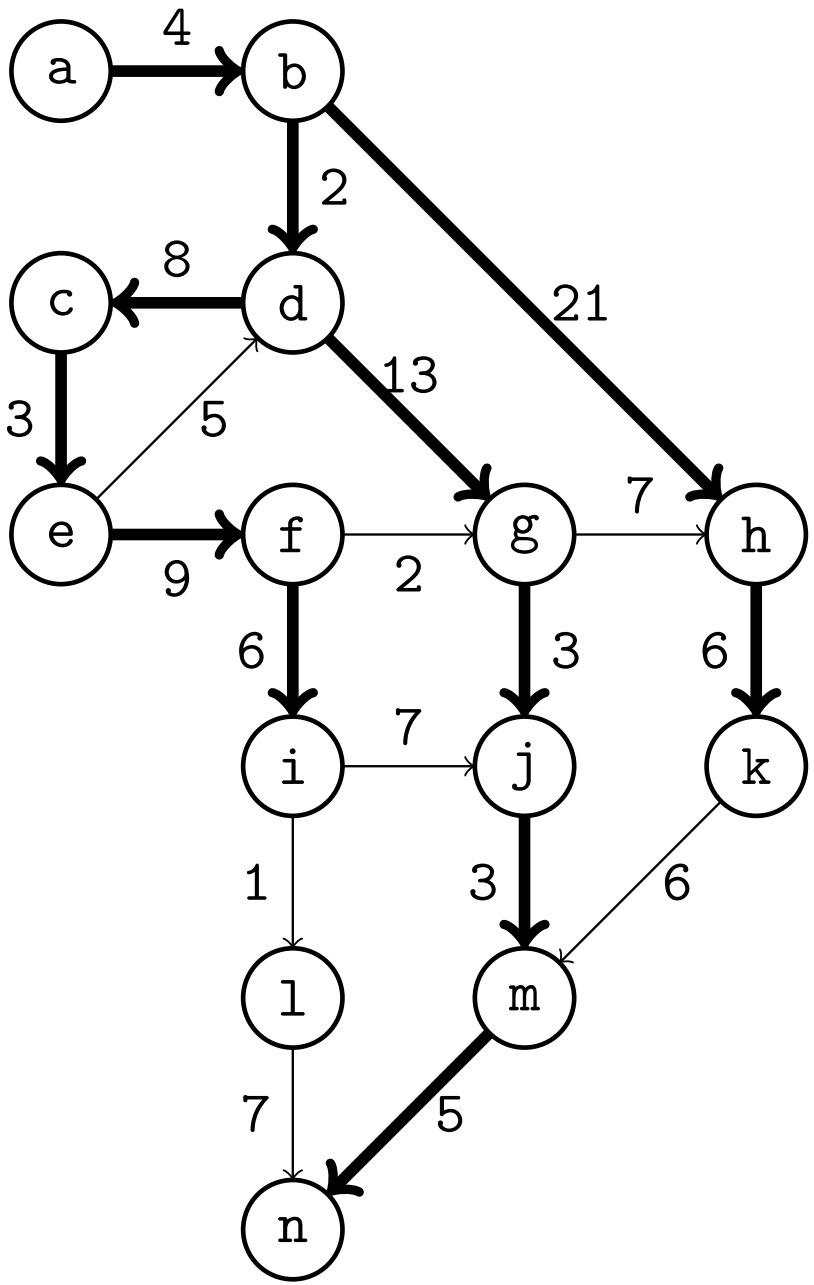

- $d(f) + w(f, i) = 26 + 6 = 32$
- Only i possible
- $d(i) \leftarrow 32$
- $pred(i) \leftarrow f$
- $S \leftarrow \{a - k, m, n\}$

Shortest paths

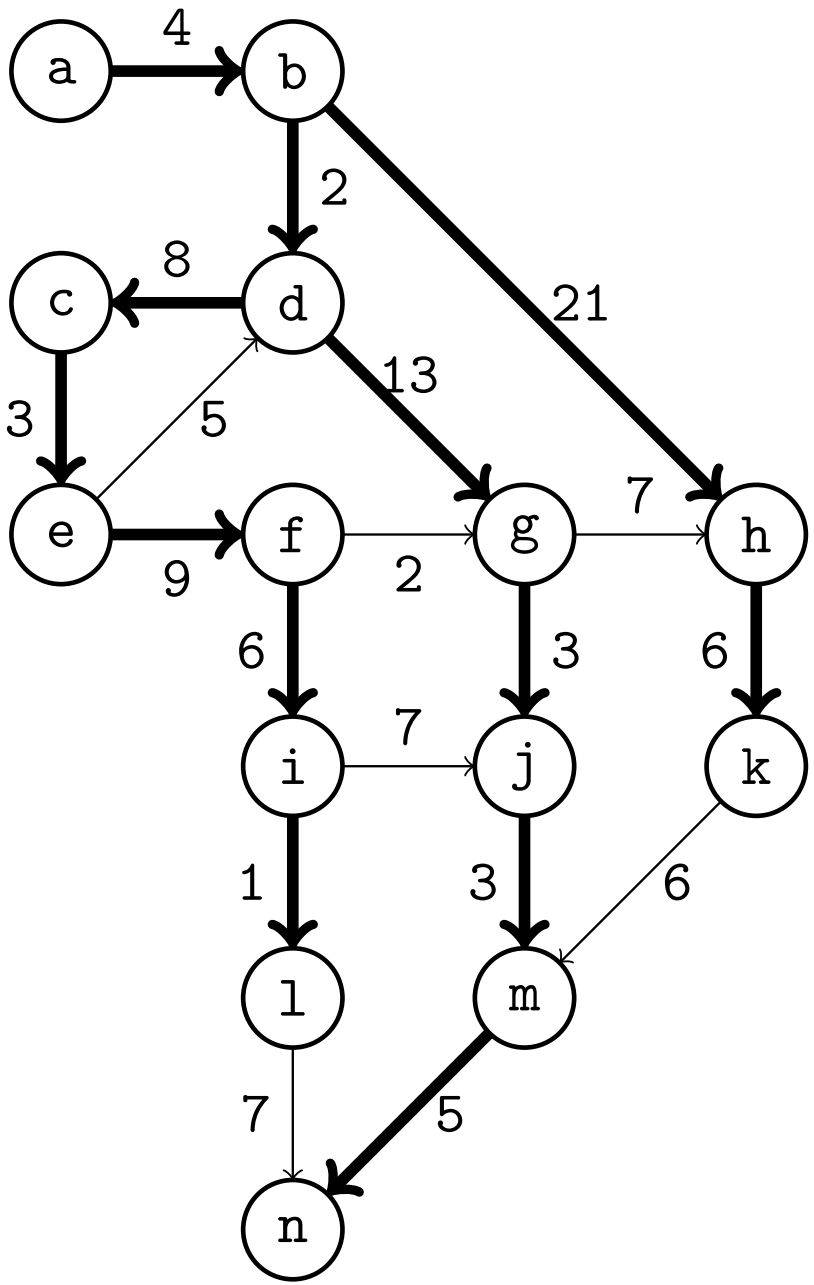

- $d(i) + w(i, l) = 32 + 1 = 33$
- Only l possible
- $d(l) \leftarrow 33$
- $pred(l) \leftarrow i$
- $S \leftarrow \{a - n\}$

Observations about Dijkstra's algorithm

- We only add an edge when it is to a node with minimum distance from the start vertex.
- To print the shortest path from s to any node v, simply print v and follow the $pred(v)$ attributes.

Dijkstra's algorithm

Theorem

For each node $v \in S$, $d(v)$ is the length of the shortest path from s to v.

Proof.

- We use induction with base case $|S| = 1$ which is true since $S = \{s\}$ and $d(s) = 0$.
- Inductive hypothesis: Assume theorem is true for $|S| \geq 1$.
- Let v be the next node added to S, and $pred(v) = u$.
- $d(v) = d(u) + w(e)$ where $e = (u, v)$.
- Assume in contradiction there exists a shorter path from s to v containing the edge (x, y) with $x \in S$ and $y \notin S$, followed by the subpath from y to v.
- Since the path via y to v is shorter than the path from u to v, $d(y) < d(v)$ but it is not since v is chosen and not y. A contradiction which means no shorter path to v exists.

Recall

procedure *dijkstra* (G, s)
  $d(s) \leftarrow 0$
  $Q \leftarrow V - \{s\}$
  $S \leftarrow \{s\}$
  while $Q \neq \emptyset$
    select v which minimizes $d(u) + w(e)$ where $u \in S, v \notin S, e = (u, v)$
    $d(v) \leftarrow d(u) + w(e)$
    $pred(v) \leftarrow u$
    remove v from Q
    add v to S

- We use a heap priority queue for Q with $d(v)$ as keys.
- For $v \neq s$ we initially set $d(v) \leftarrow \infty$ and then decrease it
- Quiz: does Dijkstra's algorithm work also for undirected graphs?

Undirected graphs

- Answer: yes, it does not matter
- Quiz: does it work with negative edge weights?

Negative edge weights

- Answer: no
- You can find an example with three nodes and three edges
- Can it be less expensive to fly from Copenhagen to Paris via London and Dijkstra fails to find the route?
- Why not just find the most negative edge and add it to every edge?
- Quiz: find an example where that fails.

Running time of Dijkstra's algorithm

- Assume n nodes and m edges
- Constructing Q: $O(n)$ using heapify (but $O(n \log n)$ using n inserts)
- Heapify is called init_heap in C and pseudo code in the book
- Since all nodes have ∞ distance they can be put anywhere (still $O(n)$)
- $O(n)$ iterations of the while loop with $O(\log n)$ to take out minimum, so $O(n \log n)$
- Each selected node must check each neighbor not in S and possibly reduce its key
- Time to reduce a key is assumed to be $O(\log n)$
- Each edge may reduce a key, so $O(m \log n)$ for reducing keys
- In total $O(n \log n + m \log n)$ running time
- With all nodes reachable from s, we have $m \geq n - 1$
- So therefore $O(m \log n)$ running time

The minimum spanning tree problem

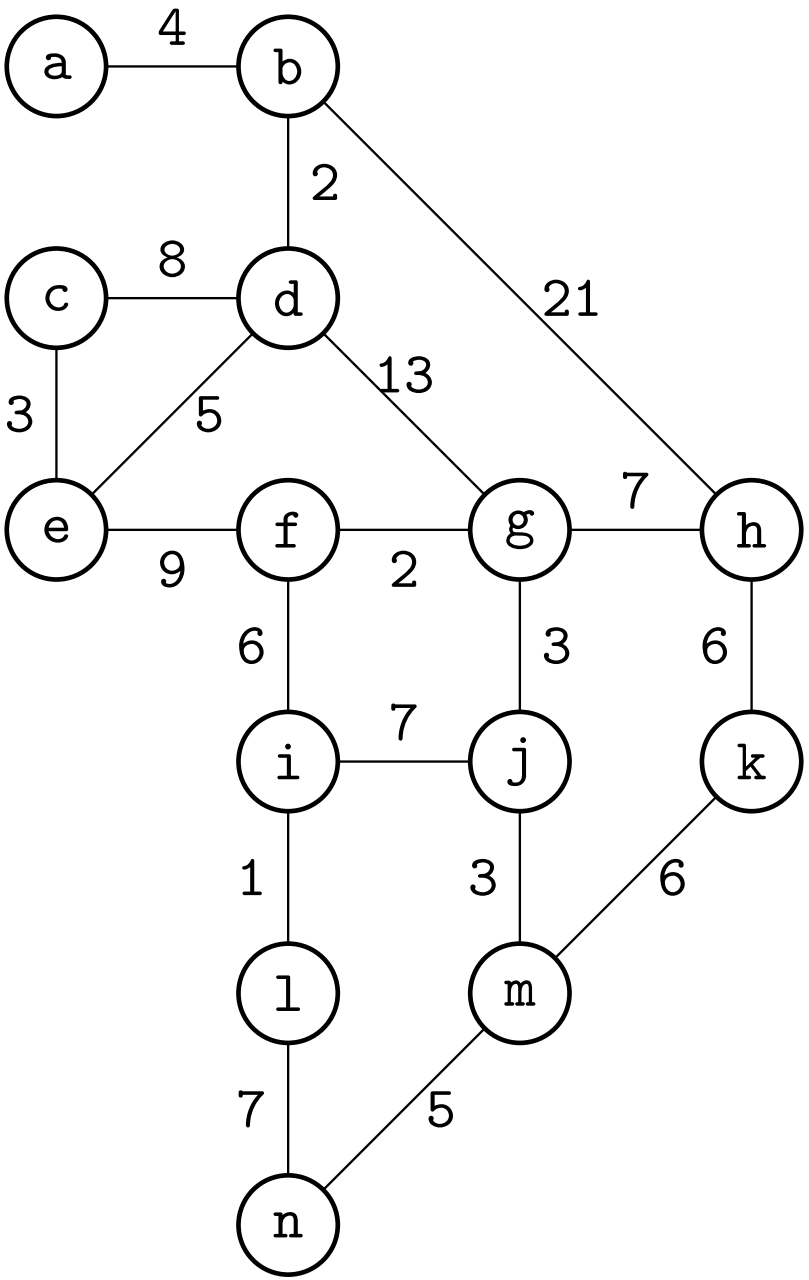

- We have an undirected graph.
- Assume the nodes are cities and a country wants to build an electrical network
- The edge weights are the costs of connecting two cities
- We want to find a subset of the edges so that all cities are connected, and minimizes the cost
- This problem was suggested to the Czech mathematician Otakar Borůvka during World War I for Mähren.

The minimum spanning tree problem

- In 1926 Borůvka published the first paper on finding the **minimum spanning tree**.
- Minimum-weight spanning tree is abbreviated MST.
- It has been regarded as the cradle of combinatorial optimization.
- Borůvka's algorithm has been rediscovered several times: Choquet 1938, by Florek, Lukasiewicz, Steinhaus, and Zubrzycki 1951 and by Sollin 1965.
- We will study two classic algorithms for this problem:
  - Jarnik's algorithm from 1930 (rediscoved by Prim 1957), and
  - Kruskal's algorithm from 1956
- One of the currently fastest MST algorithms by Chazelle from 2000 is based on Borůvka's algorithm.

MST

- Consider a connected undirected graph $G(V, E)$
- If $T \subseteq E$ and (V, T) is a tree, it is called a **spanning tree** of $G(V, E)$
- Given edge costs $c(e)$, a (V, T) is a **minimum spanning tree**, or **MST** of G such that the sum of the edge costs is minimized.
- Jarnik's algorithm is similar to Dijkstra's and grows an MST starting from an arbitrary root node
- Jarnik published his the same year Dijkstra was born
- Kruskal's algorithm instead creates a forest which eventually becomes one MST

Minimum spanning tree: Jarnik's algorithm

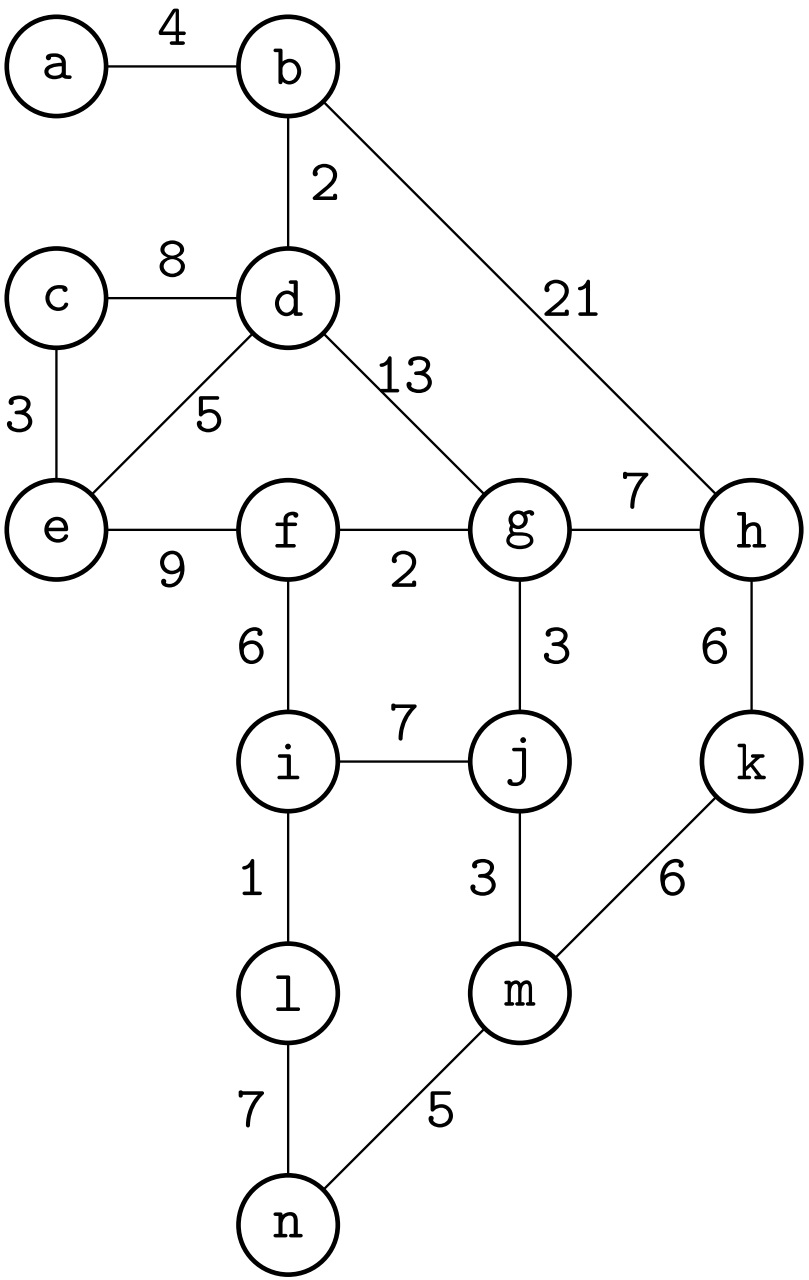

- First select a root node s.
- Any will do.
- How can we know which edge to add next?
- Is it possible to do it with a greedy algorithm?

Safe edges

- We will next learn a rule which Jarnik's and Kruskal's algorithm rely on
- It determines when it is safe to add a certain edge (u, v)
- A partition $(S, V - S)$ of the nodes V is called a **cut**
- An edge (u, v) **crosses** the cut if $u \in S$ and $v \in V - S$
- Let A be a subset of the edges in some minimum spanning tree of G
- This A works for both Jarnik och Kruskal
- An edge (u, v) is **safe** if $A \cup \{(u, v)\}$ is also a subset of the edges in some MST.
- So how can we know it is?

Safe edges

Lemma

Assume A is a subset of the edges in some minimum spanning tree of G, $(S, V - S)$ is any cut of V, and no edge in A crosses $(S, V - S)$. Then every edge (u, v) with minimum weight, $u \in S$, and $v \in V - S$ is safe.

Proof.

- Assume $A \subset T$ and $T \subseteq E$ is a minimum spanning tree of G.
- We have either $(u, v) \in T$ (in which case we are done) or $(u, v) \notin T$.
- Assume $u \in S$ and $v \in V - S$
- There is a path p in T which connects u and v
- Therefore $T \cup \{(u, v)\}$ creates a cycle with p
- There is an edge $(x, y) \in T$ which also crosses $(S, V - S)$ and by assumption $(x, y) \notin A$

$\square$

Safe edges

Proof.

- Since T is a minimum spanning tree, it has only one path from u to v.
- Removing (x, y) from T partitions V and adding (u, v) creates a new spanning tree U
- $U = (T - \{(x, y)\}) \cup \{(u, v)\}$
- Since (u, v) has minimum weight, $w(U) \leq w(T)$, and since T is a minimum spanning tree, $w(U) = w(T)$
- Since $A \cup (u, v) \subseteq U$, (u, v) is safe for A

$\square$

Jarnik's algorithm — overview

- input $w(e)$ weight of edge $e = (u, v)$. We also write $w(u, v)$
- a root node $r \in V$
- output minimum spanning tree T

procedure *jarnik*(G, r)
  $T \leftarrow \emptyset$
  $Q \leftarrow V - \{r\}$
  while $Q \neq \emptyset$
    select a v which minimizes $w(e)$ where $u \notin Q, v \in Q, e = (u, v)$
    remove v from Q
    add (u, v) to T
  return T

- We use a heap priority queue for Q with $d(v)$, the distance to any node in $V - Q$, as keys.

Running time of Jarnik's algorithm

- Jarnik has the same running time as Dijkstra
- Assume n nodes and m edges
- $O(n)$ iterations of the while loop
- $O(\log n)$ to take out min node
- Each selected node must check each neighbor not in Q and possibly reduce its key
- $O(m \log n)$ operations for reducing keys
- With all nodes reachable from s, we have $m \geq n - 1$
- Therefore $(m \log n)$ running time as before
- What is the difference between this and Dijkstra's algorithm?
  - Jarnik assumes undirected graph
  - Key is only one edge weight and not a path weight from a root node

Kruskal's algorithm — overview

- input $w(e)$ weight of edge $e = (u, v)$. We also write $w(u, v)$
- output minimum spanning tree T

procedure *kruskal*(G)
  $T \leftarrow \emptyset$
  $B \leftarrow E$
  while $B \neq \emptyset$
    select an edge e with minimal weight
    if $T \cup \{e\}$ does not create a cycle **then**
      add e to T
    remove e from B
  return T

- How can we detect cycles faster than searching for a cycle?

The union-find data structure

- Consider a set, such as with n nodes of a graph
- A union-find data structure lets us:
  - Create an initial partitioning $\{p_0, p_1, ..., p_{n-1}\}$ with n sets consisting of one element each
  - Merge two sets p_i and p_j
  - Check which set an elements belongs to
- The merge operation is called **union**
- The check set operation is called **find**
- We can use this as follows:
  - A set represents a connected subgraph and initially consists of one node
  - When we check an edge (u, v) we need to:
    - Find the set p_u with u
    - Find the set p_v with v
    - Ignore (u, v) if $find(u) = find(v)$
    - Otherwise add (u, v) and use **union** to merge p_u and p_v

Union-find data structure

- Each node v has an extra attribute $parent(v)$ in a tree
- How should the sets p_i be "named"?
- It is only essential that two different sets have different names
- It is suitable to let the node v be the initial name of p_v
- Then after a union operation with u and v we set one p_u and p_v as the name of the merged set
- Assume we use u as the name. Then v needs a way to find u

find

```
procedure find(v)
begin
    if (parent(v) = null) then
        return v
    else
        return find(parent(v))
end
```

union

procedure *union* (u, v)
begin
    $parent(v) \leftarrow u$
end

find with path compression

```
procedure find(v)
begin
    p ← v
    while (parent(p) ≠ null) do
        p ← parent(p)
    while (parent(v) ≠ null) do
        w ← parent(v)
        parent(v) ← p
        v ← w
    return p
end
```

union-by-size

```
procedure union(u, v)
begin
    u ← find(u)
    v ← find(v)
    if size(u) < size(v) then
        parent(u) ← v
        size(v) ← size(u) + size(v)
    else
        parent(v) ← u
        size(u) ← size(u) + size(v)
end
```

Efficiency of Union-Find

- Using both path compression and union-by-size (or union-by-rank), the time complexity of m find and n union operations is:

$$\begin{array}{ll} \Theta(m\alpha(m,n)) & m \geq n \\ \Theta(n + m\alpha(m,n)) & m < n \end{array}$$

- $\alpha(m,n)) \leq 4$ for all practical values of m and n

Running time of Kruskal's algorithm

- Assume n nodes and m edges and $m > n$
- Sorting the edges: $O(m \log m)$
- Adding an edge (v, w) would create a cycle if find(v) = find(w)
- There are m edges so we do at most $2m$ find operations
- A tree has $n - 1$ edges so we do $n - 1$ union operations
- From previous slide the complexity of these union-find operations is $\Theta(m\alpha(m, n))$
- We can conclude that sorting the edges is more costly than the union-find operations so the running time of Kruskal's algorithm is $O(m \log m)$
- We have $m \leq n^2$
- Therefore $O(m \log m) = O(m \log n^2) = O(2m \log n) = O(m \log n)$
- I.e. the same as for Jarnik's algorithm.