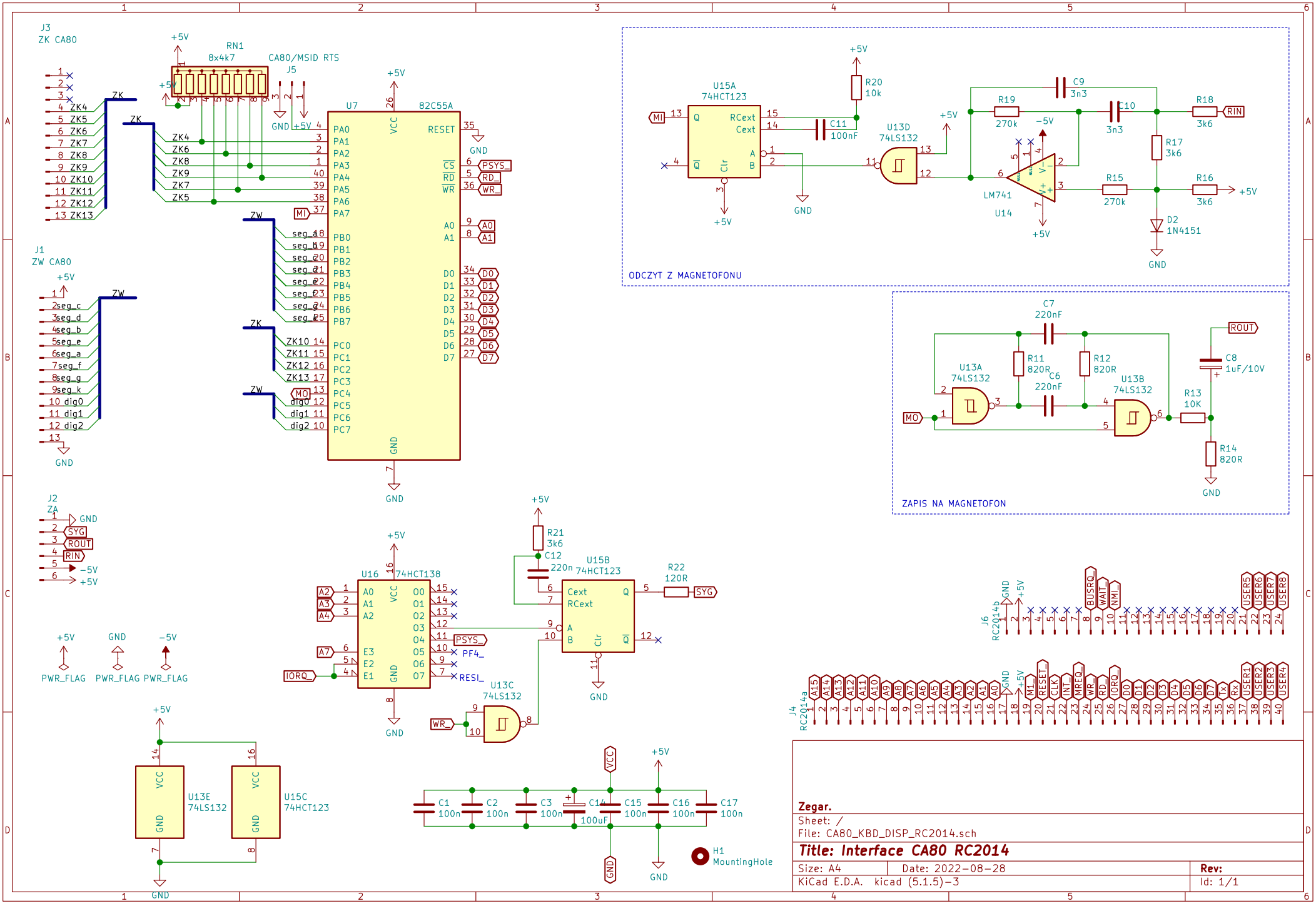
J3
ZK CA80
RN1
8x4k7
CA80/MSID RTS
J5
U7
82C55A
J1
ZW CA80
J2
ZA
U16
74HCT138
U15A
74HCT123
U13D
74LS132
LM741
U14
ODCZYT Z MAGNETOFONU
U13A
74LS132
U13B
74LS132
ZAPIS NA MAGNETOFON
U15B
74HCT123
U13C
74LS132
U13E
74LS132
U15C
74HCT123
J6
RC2014b
J4
RC2014a
PWR_FLAG
H1
MountingHole
Zegar.
Sheet: /
File: CA80_KBD_DISP_RC2014.sch
Title: Interface CA80 RC2014
Size: A4
Date: 2022-08-28
Rev:
KiCad E.D.A. kicad (5.1.5)-3
Id: 1/1