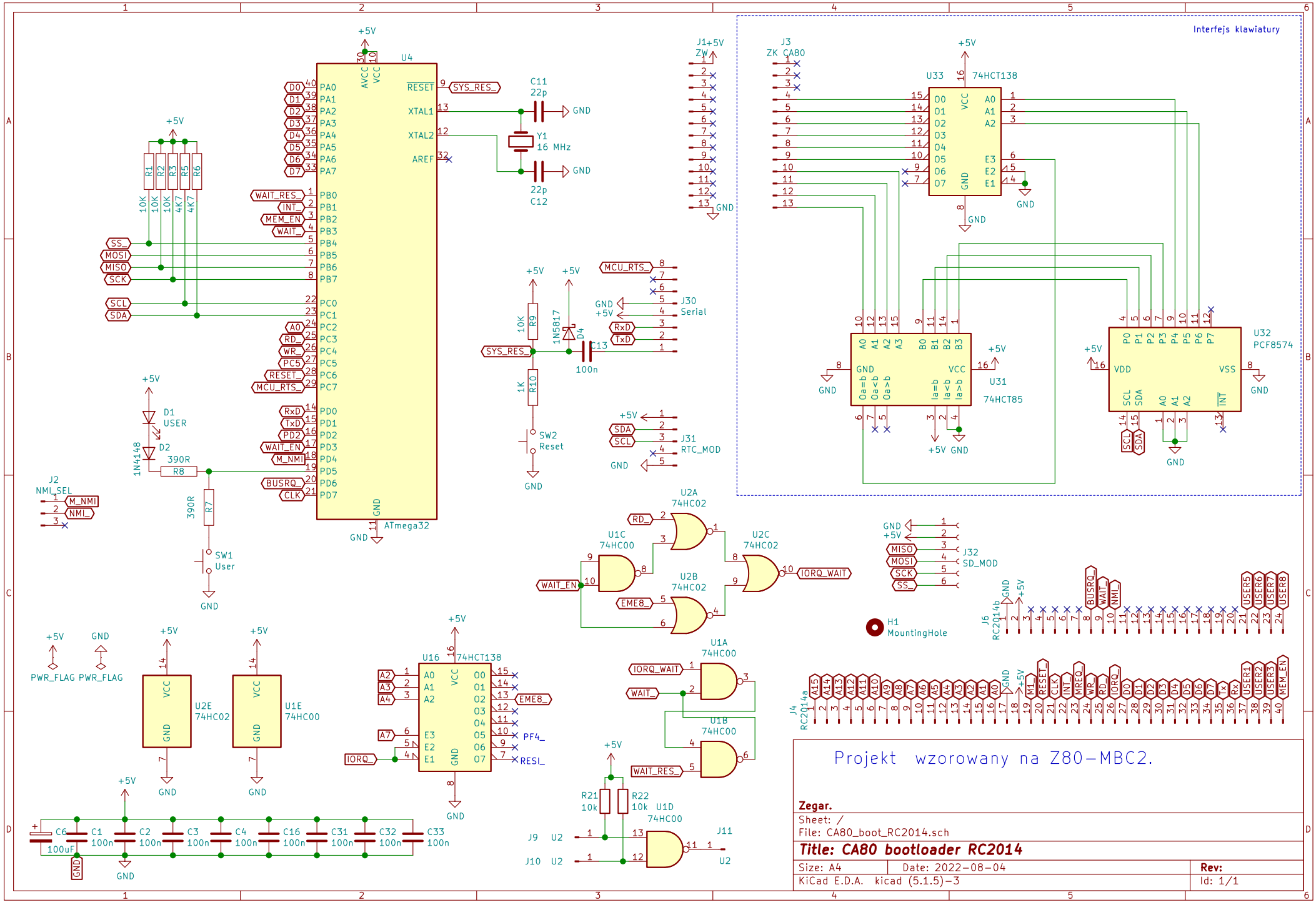
Interfejs klawiatury
U4
ATmega32
U33
74HCT138
U31
74HCT85
U32
PCF8574
J3
ZK CA80
J1
ZW
J30
Serial
J31
RTC_MOD
J32
SD_MOD
J2
NMI_SEL
SW1
User
SW2
Reset
D1
USER
D2
1N4148
1N5817
Y1
16 MHz
C11
22p
C12
22p
C13
100n
R1
R2
R3
R5
R6
R7
R8
R9
R10
U1C
74HC00
U2A
74HC02
U2B
74HC02
U2C
74HC02
U2E
74HC02
U1E
74HC00
U16
74HCT138
U1A
74HC00
U1B
74HC00
U1D
74HC00
H1
MountingHole
J6
RC2014b
J4
RC2014a
PWR_FLAG
C6
100uF
C1
100n
C2
100n
C3
100n
C4
100n
C16
100n
C31
100n
C32
100n
C33
100n
R21
10k
R22
10k
J9
J10
J11
Projekt wzorowany na Z80-MBC2.
Zegar.
Sheet: /
File: CA80_boot_RC2014.sch
Title: CA80 bootloader RC2014
Size: A4
Date: 2022-08-04
Rev:
KiCad E.D.A. kicad (5.1.5)-3
Id: 1/1