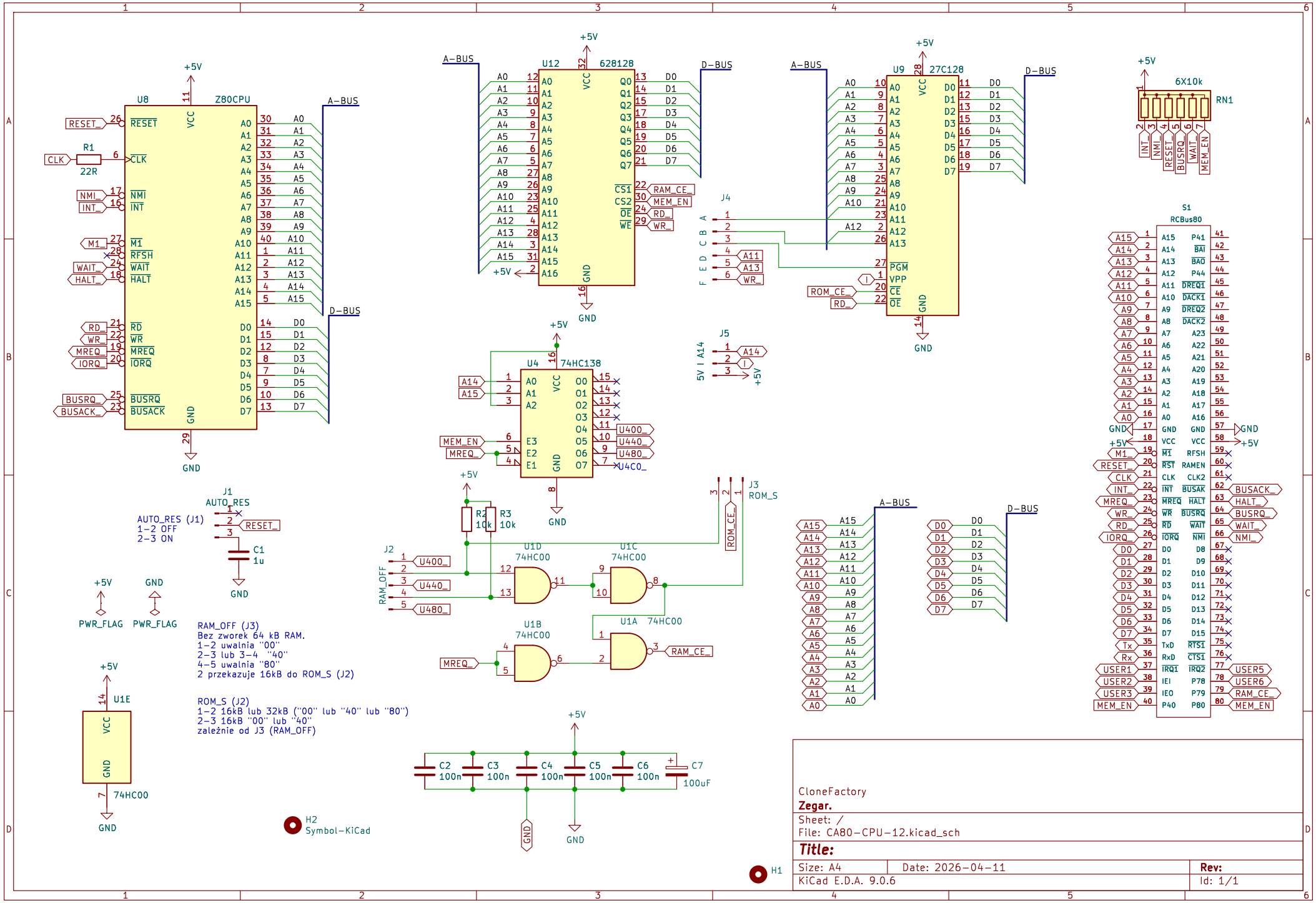Package_DIP:DIP-40_W15.24mm
www.zilog.com/manage_directlink.php?filepath=docs/z80/um0080