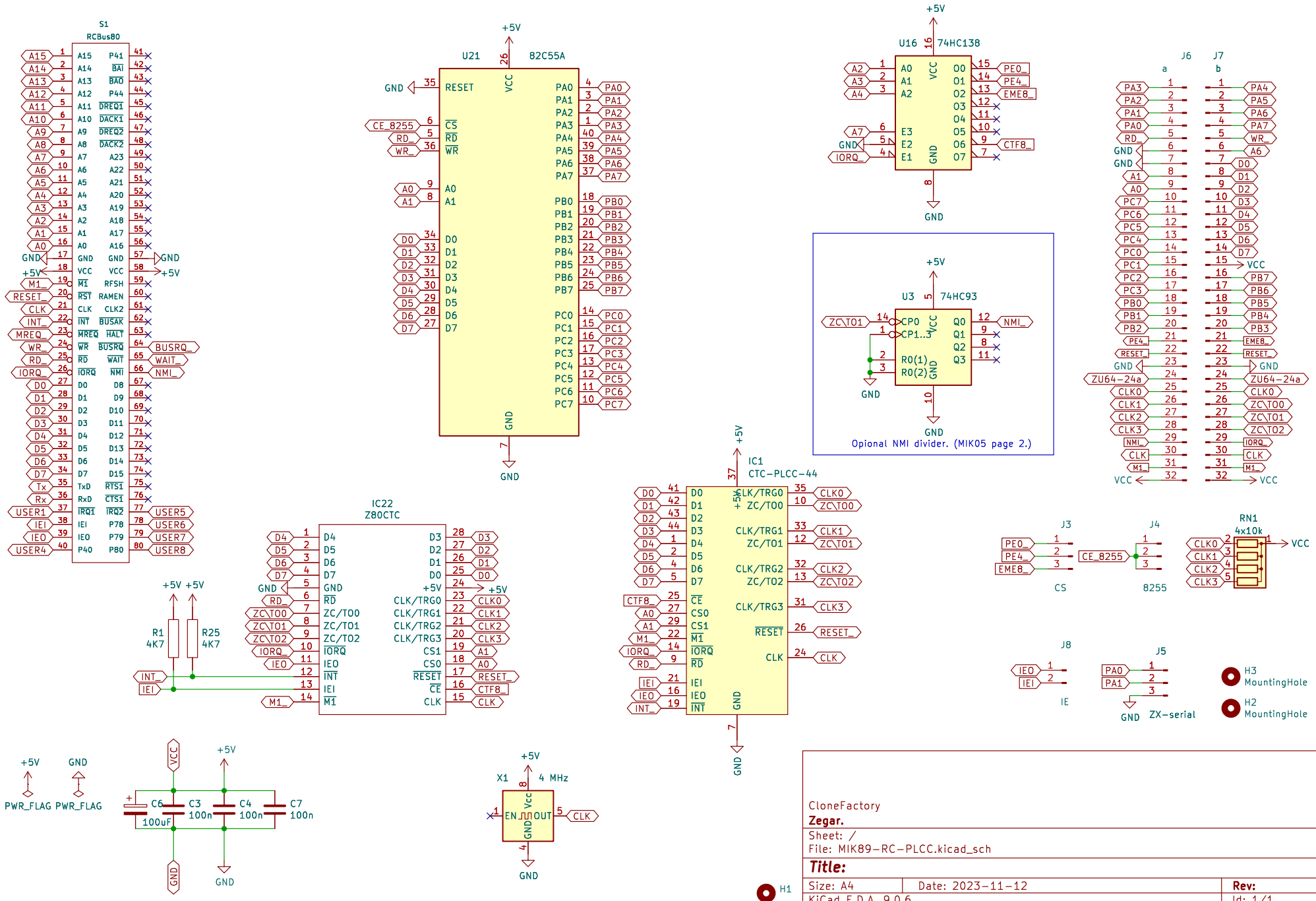
S1
RCBus80
U21
82C55A
U16
74HC138
U3
74HC93
Opional NMI divider. (MIK05 page 2.)
J6
J7
IC22
Z80CTC
IC1
CTC-PLCC-44
J3
J4
CS
8255
RN1
4x10k
J8
IE
J5
ZX-serial
H3
MountingHole
H2
MountingHole
H1
R1
4K7
R25
4K7
C6
100uF
C3
100n
C4
100n
C7
100n
X1
4 MHz
PWR_FLAG
PWR_FLAG
CloneFactory
Zegar.
Sheet: /
File: MIK89-RC-PLCC.kicad_sch
Title:
Size: A4
Date: 2023-11-12
Rev:
KiCad E.D.A. 9.0.6
Id: 1/1