Socket:DIP_Socket-40_W11.9_W12.7_W15.24_W17.78_W18.5_3M_240-1280-00-0602J
www.zilog.com/manage_directlink.php?filepath=docs/z80/um0080

U1, U4 and U9 are not needed. Connect U1.3 to U1.4 (MREQ_ -> RAM_CE_).

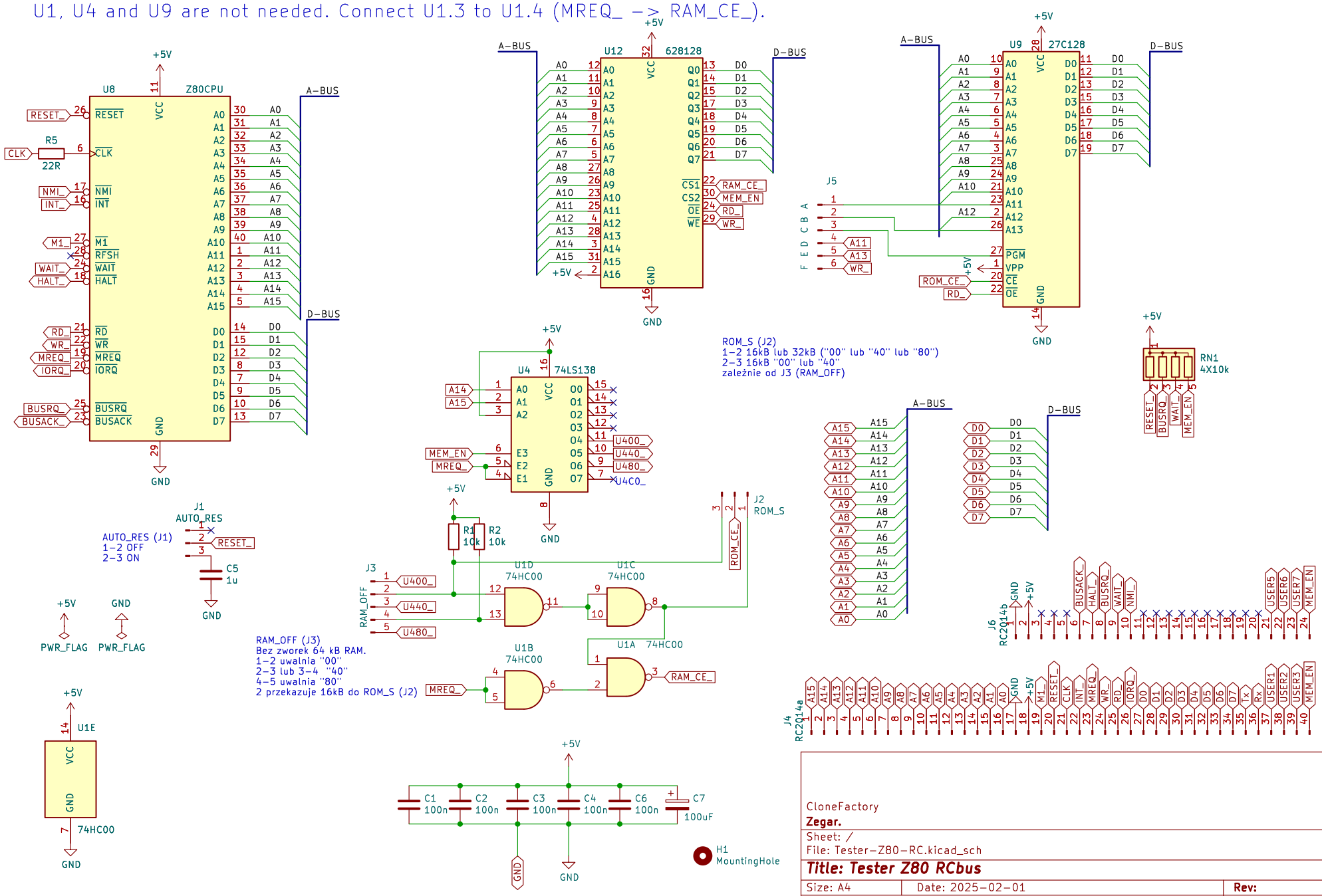

CloneFactory
Zegar.
Sheet: /
File: Tester-Z80-RC.kicad_sch

Title: Tester Z80 RCbus

Size: A4	Date: 2025-02-01	Rev:
KiCad E.D.A. kicad (7.0.0)		Id: 1/1