Check out https://pcbreview.net/ for AI schematic / board reviews

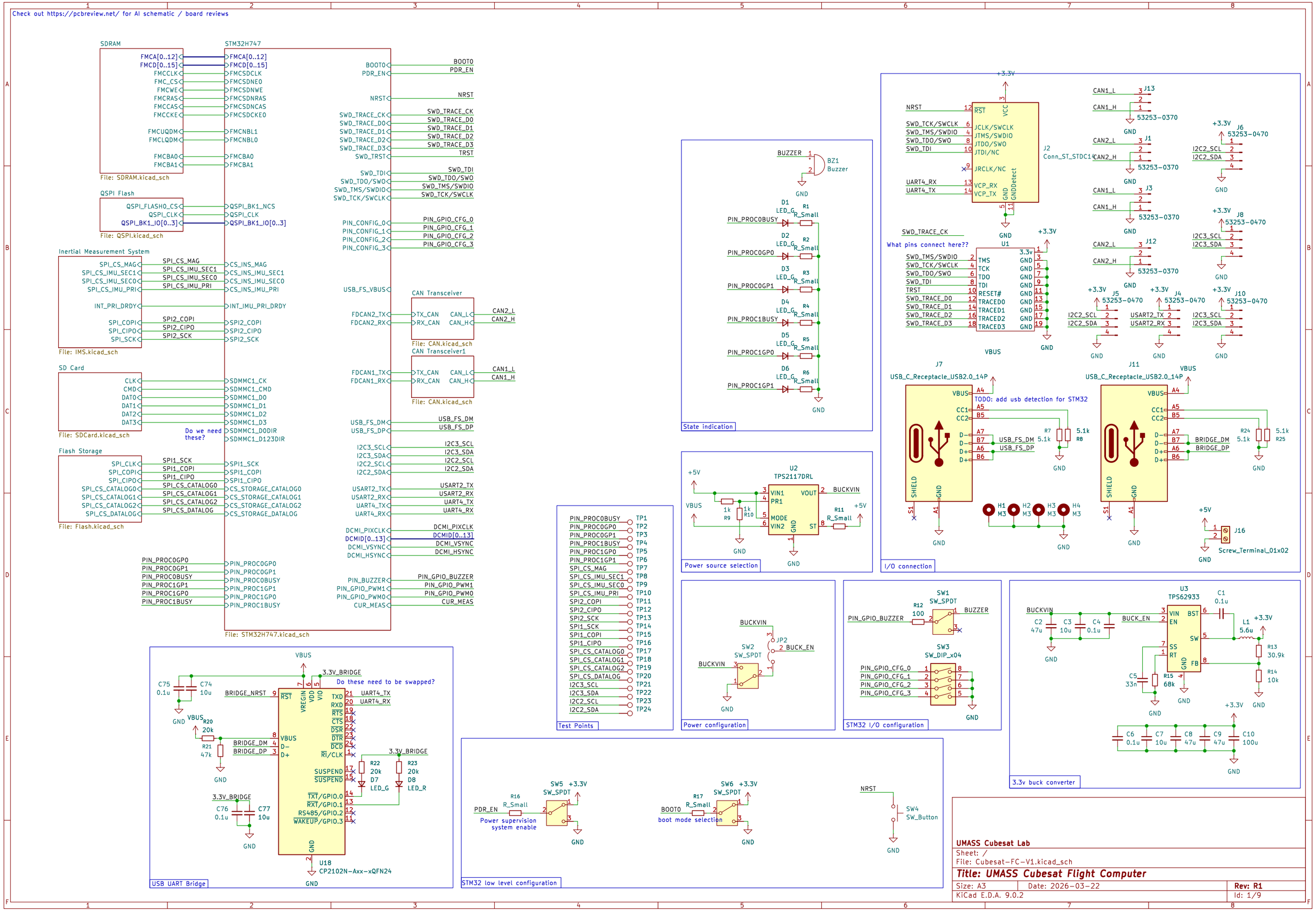


UMASS Cubesat Lab

Sheet: /

File: Cubesat-FC-V1.kicad_sch

**Title: UMASS Cubesat Flight Computer**

| | | |
|---|---|---|
| Size: A3 | Date: 2026-03-22 | Rev: R1 |
| KiCad E.D.A. 9.0.2 | | Id: 1/9 |

Download the STM32H747BI datasheet here
Also available here

Note on SMPS:
The SMPS uses a switching voltage regulator to increase the efficiency of the STM32, but given the added complexity and relatively small gain in power efficiency (plus the risk of the switching FETs latching in space), I dont think this is necesarry.

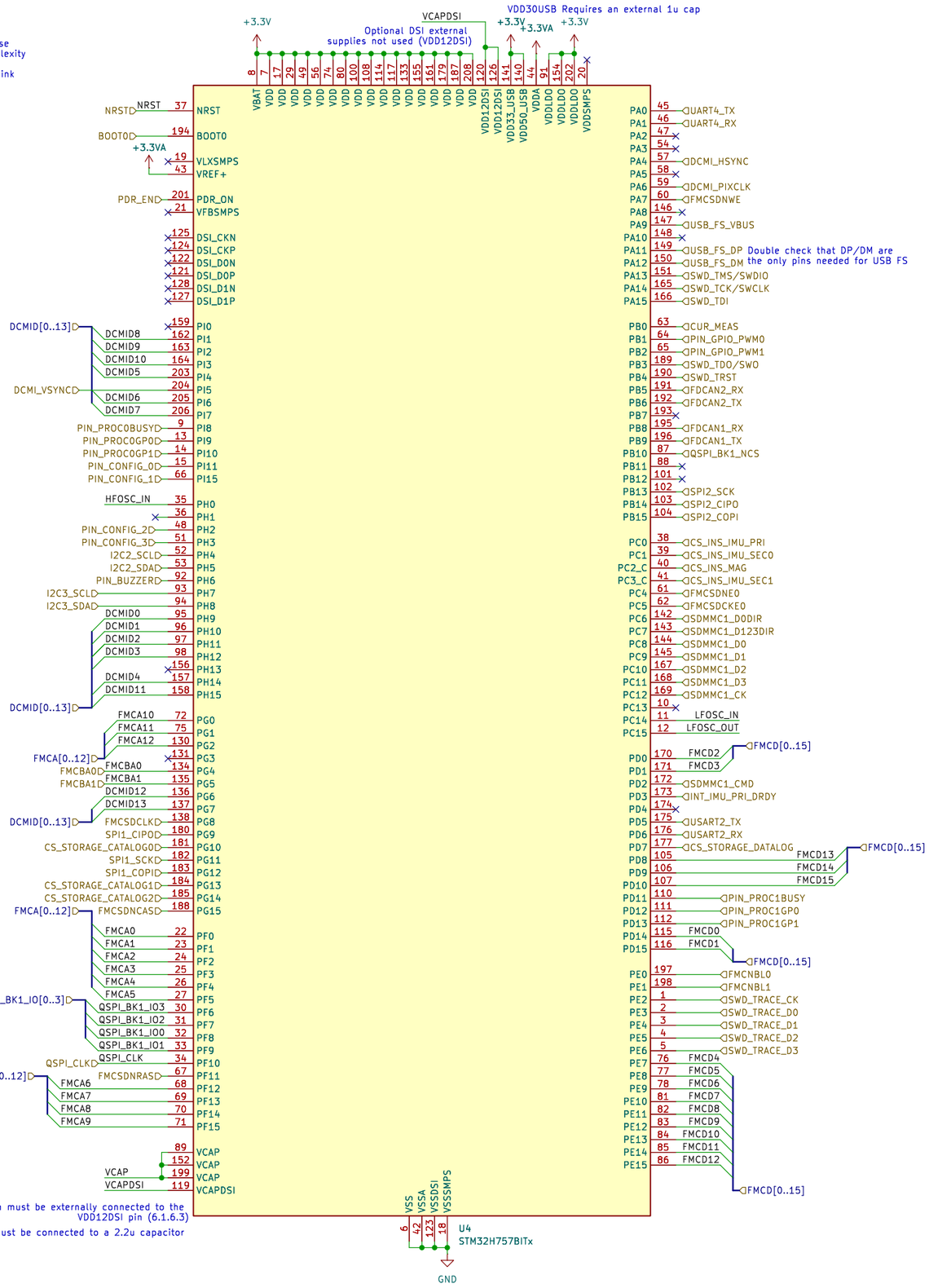
VCAPDSI
Optional DSI external supplies not used (VDD12DSI)
VDD30USB Requires an external 1u cap
+3.3V
+3.3VA
VBAT VDD VDD VDD

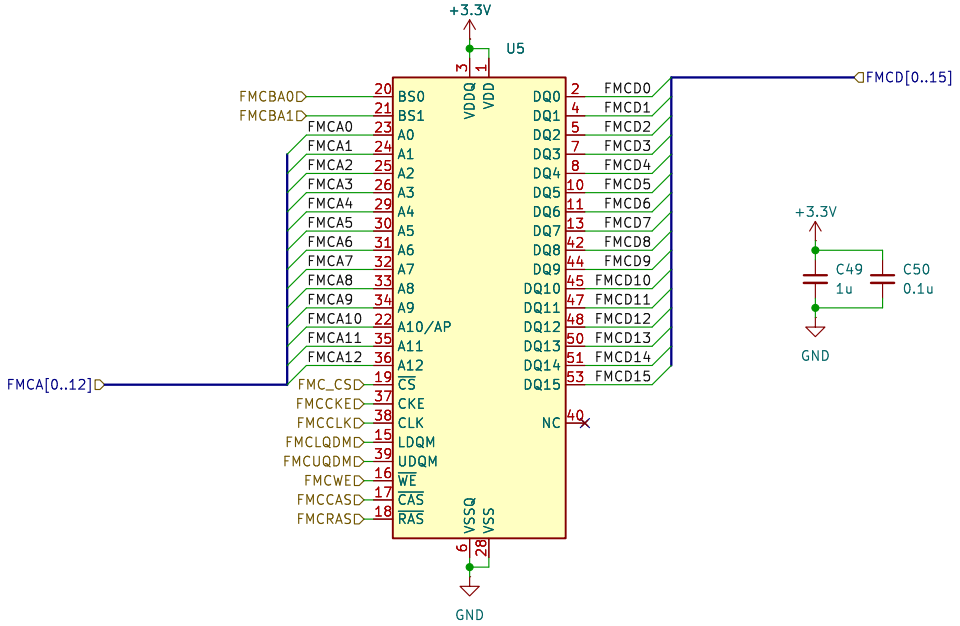


**UMASS Cubesat Lab**

Sheet: /SDRAM/

File: SDRAM.kicad_sch

***Title:***

| | | |
|---|---|---|
| Size: A5 | Date: 2026-03-22 | **Rev: R1** |
| KiCad E.D.A. 9.0.2 | | Id: 3/9 |

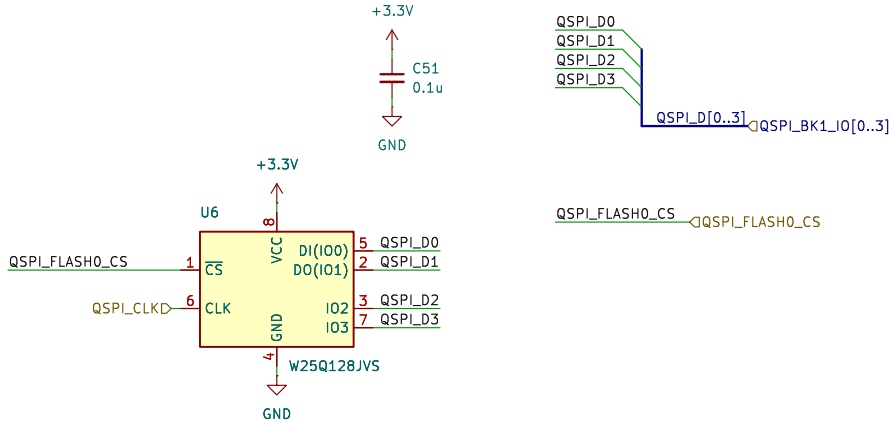


**UMASS Cubesat Lab**

Sheet: /QSPI Flash/
File: QSPI.kicad_sch

***Title:***

| | | |
|---|---|---|
| Size: A5 | Date: 2026-03-22 | **Rev: R1** |
| KiCad E.D.A. 9.0.2 | | Id: 4/9 |

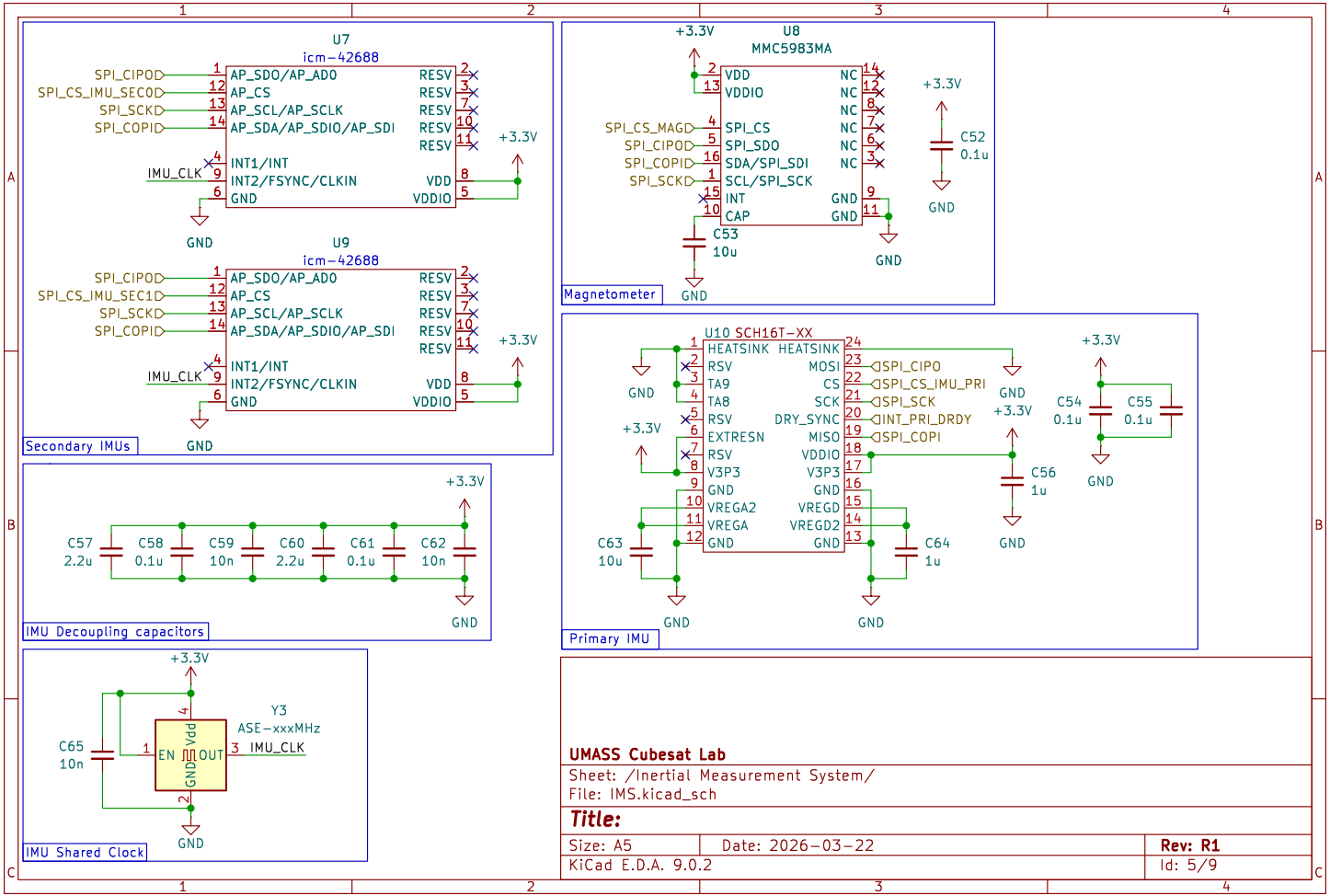
U7
icm-42688
SPI_CIPO
SPI_CS_IMU_SEC0
SPI_SCK
SPI_COPI
AP_SDO/AP_AD0
AP_CS
AP_SCL/AP_SCLK
AP_SDA/AP_SDIO/AP_SDI
INT1/INT
INT2/FSYNC/CLKIN
GND
RESV
VDD
VDDIO
IMU_CLK
+3.3V
GND
U9
icm-42688
SPI_CIPO
SPI_CS_IMU_SEC1
SPI_SCK
SPI_COPI
IMU_CLK
Secondary IMUs
U8
MMC5983MA
VDD
VDDIO
SPI_CS_MAG
SPI_CIPO
SPI_COPI
SPI_SCK
SPI_CS
SPI_SDO
SDA/SPI_SDI
SCL/SPI_SCK
INT
CAP
NC
C52
0.1u
C53
10u
Magnetometer
U10 SCH16T-XX
HEATSINK
RSV
TA9
TA8
EXTRESN
V3P3
VREGA2
VREGA
VREGD
VREGD2
MOSI
CS
SCK
DRY_SYNC
MISO
SPI_CS_IMU_PRI
INT_PRI_DRDY
C54
0.1u
C55
0.1u
C56
1u
C63
10u
C64
1u
Primary IMU
C57
2.2u
C58
0.1u
C59
10n
C60
2.2u
C61
0.1u
C62
10n
IMU Decoupling capacitors
C65
10n
Y3
ASE-xxxMHz
EN
OUT
Vdd
IMU Shared Clock
UMASS Cubesat Lab
Sheet: /Inertial Measurement System/
File: IMS.kicad_sch
Title:
Size: A5
Date: 2026-03-22
Rev: R1
KiCad E.D.A. 9.0.2
Id: 5/9

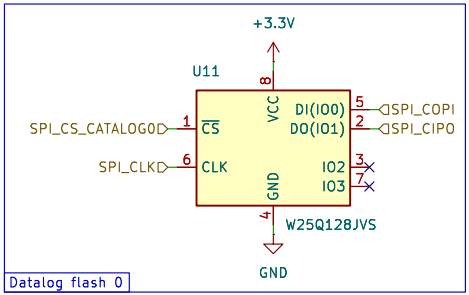


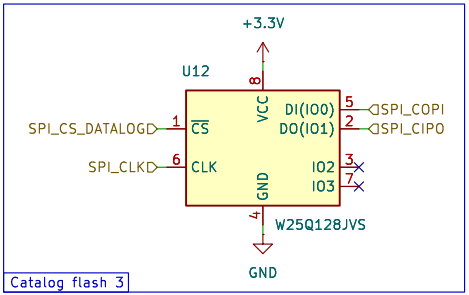


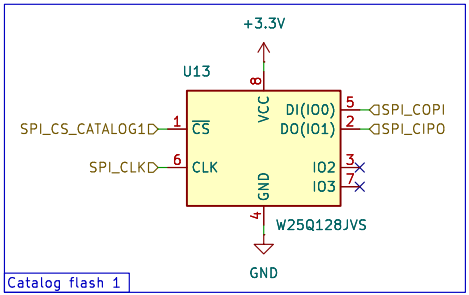


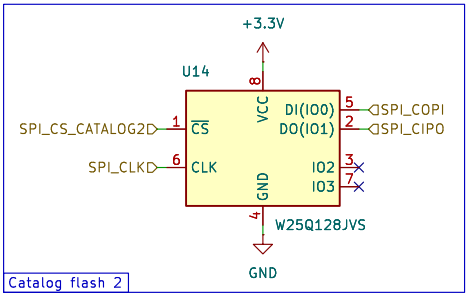


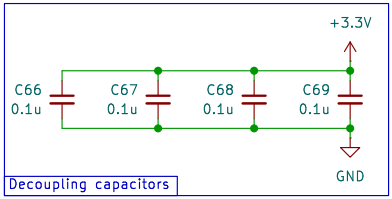


**UMASS Cubesat Lab**

Sheet: /Flash Storage/
File: Flash.kicad_sch

***Title:***

| | | |
|---|---|---|
| Size: A5 | Date: 2026-03-22 | **Rev: R1** |
| KiCad E.D.A. 9.0.2 | | Id: 6/9 |

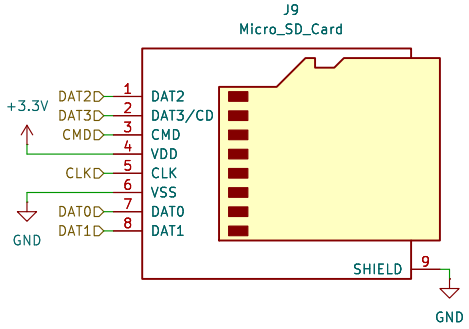


**UMASS Cubesat Lab**

Sheet: /SD Card/
File: SDCard.kicad_sch

***Title:***

| | | |
|---|---|---|
| Size: A5 | Date: 2026-03-22 | **Rev: R1** |
| KiCad E.D.A. 9.0.2 | | Id: 7/9 |

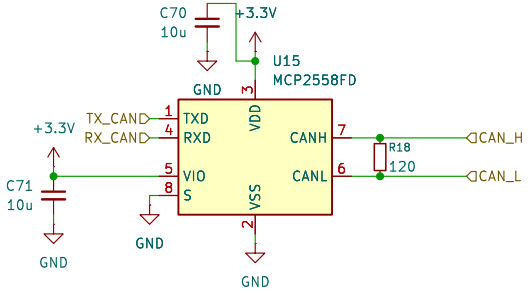


**UMASS Cubesat Lab**

Sheet: /CAN Transceiver/

File: CAN.kicad_sch

***Title:***

| | | |
|---|---|---|
| Size: A5 | Date: 2026-03-22 | **Rev: R1** |
| KiCad E.D.A. 9.0.2 | | Id: 8/9 |

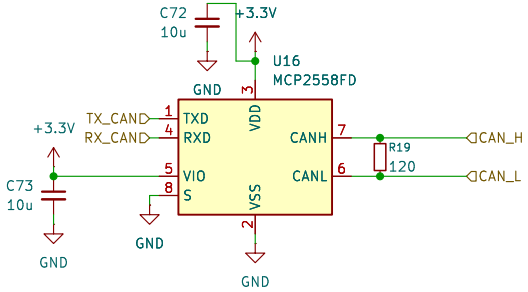


**UMASS Cubesat Lab**

Sheet: /CAN Transceiver1/

File: CAN.kicad_sch

***Title:***

| | | |
|---|---|---|
| Size: A5 | Date: 2026-03-22 | **Rev: R1** |
| KiCad E.D.A. 9.0.2 | | Id: 9/9 |