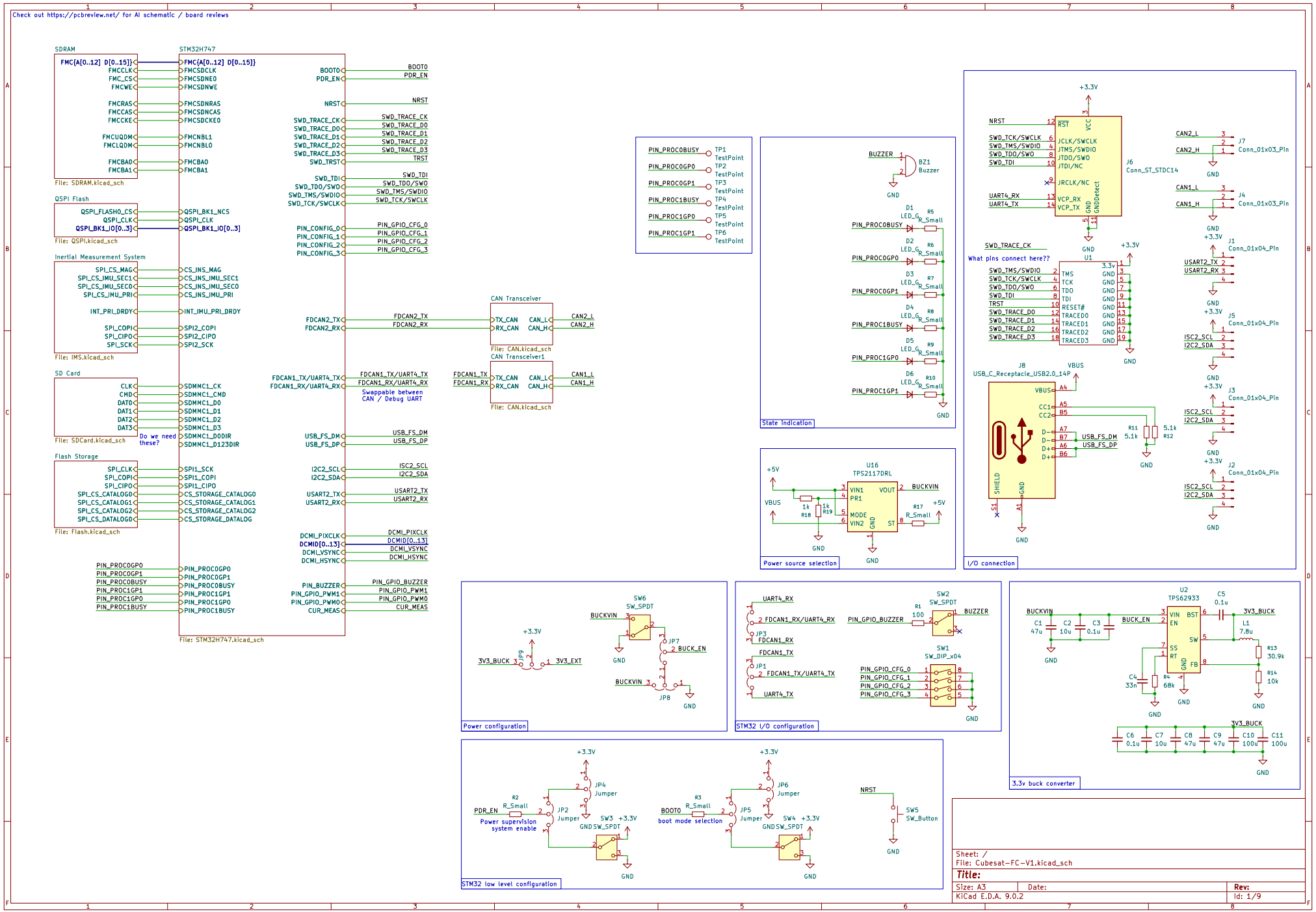
Check out https://pcbreview.net/ for AI schematic / board reviews
SDRAM
File: SDRAM.kicad_sch
QSPI Flash
File: QSPI.kicad_sch
Inertial Measurement System
File: IMS.kicad_sch
SD Card
File: SDCard.kicad_sch
Do we need these?
Flash Storage
File: Flash.kicad_sch
STM32H747
File: STM32H747.kicad_sch
CAN Transceiver
File: CAN.kicad_sch
CAN Transceiver1
File: CAN.kicad_sch
Swappable between CAN / Debug UART
State Indication
Power source selection
I/O connection
What pins connect here??
Power configuration
STM32 I/O configuration
3.3v buck converter
Power supervision system enable
boot mode selection
STM32 low level configuration
Sheet: /
File: Cubesat-FC-V1.kicad_sch
Title:
Size: A3
Date:
Rev:
KiCad E.D.A. 9.0.2
Id: 1/9

Download the STM32H747BI datasheet here
Also available here

Note on SMPS:
The SMPS uses a switching voltage regulator to increase the efficiency of the STM32, but given the added complexity and relatively small gain in power efficiency (plus the risk of the switching FETs latching in space), I dont think this is necesarry.

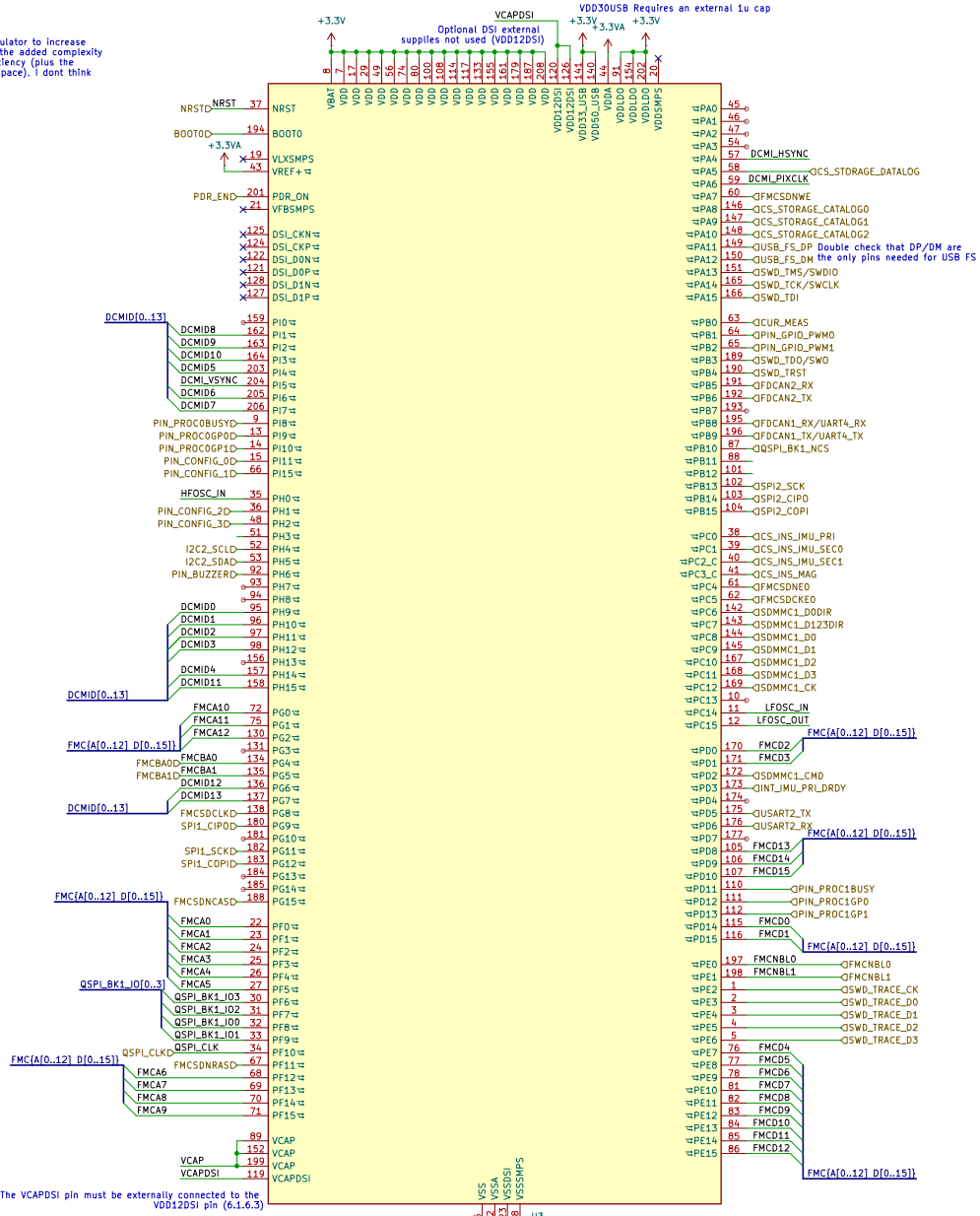

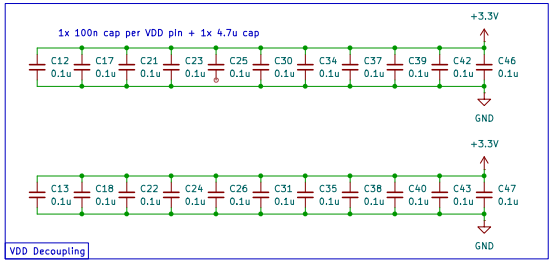

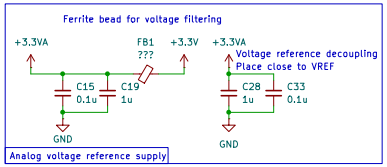

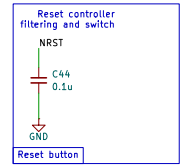

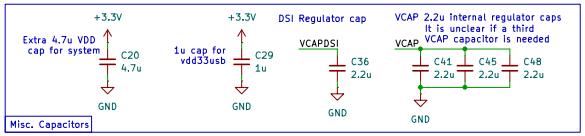

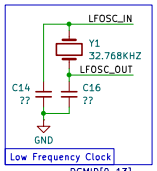

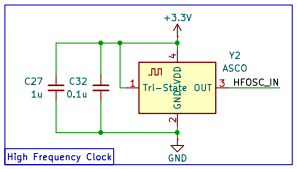

DCMID[0..13] ◁ DCMID[0..13]
DCMI_VSYNC ◁ DCMI_VSYNC
DCMI_HSYNC ◁ DCMI_HSYNC
DCMI_PIXCLK ◁ DCMI_PIXCLK
QSPI_BK1_IO[0..3] ◁ QSPI_BK1_IO[0..3]
FMC{A[0..12] D[0..15]} ◁ FMC{A[0..12] D[0..15]}

Sheet: /STM32H747/	
File: STM32H747.kicad_sch	
Title:	
Size: A3 Date:	**Rev:**
KiCad E.D.A. 9.0.2	Id: 2/9

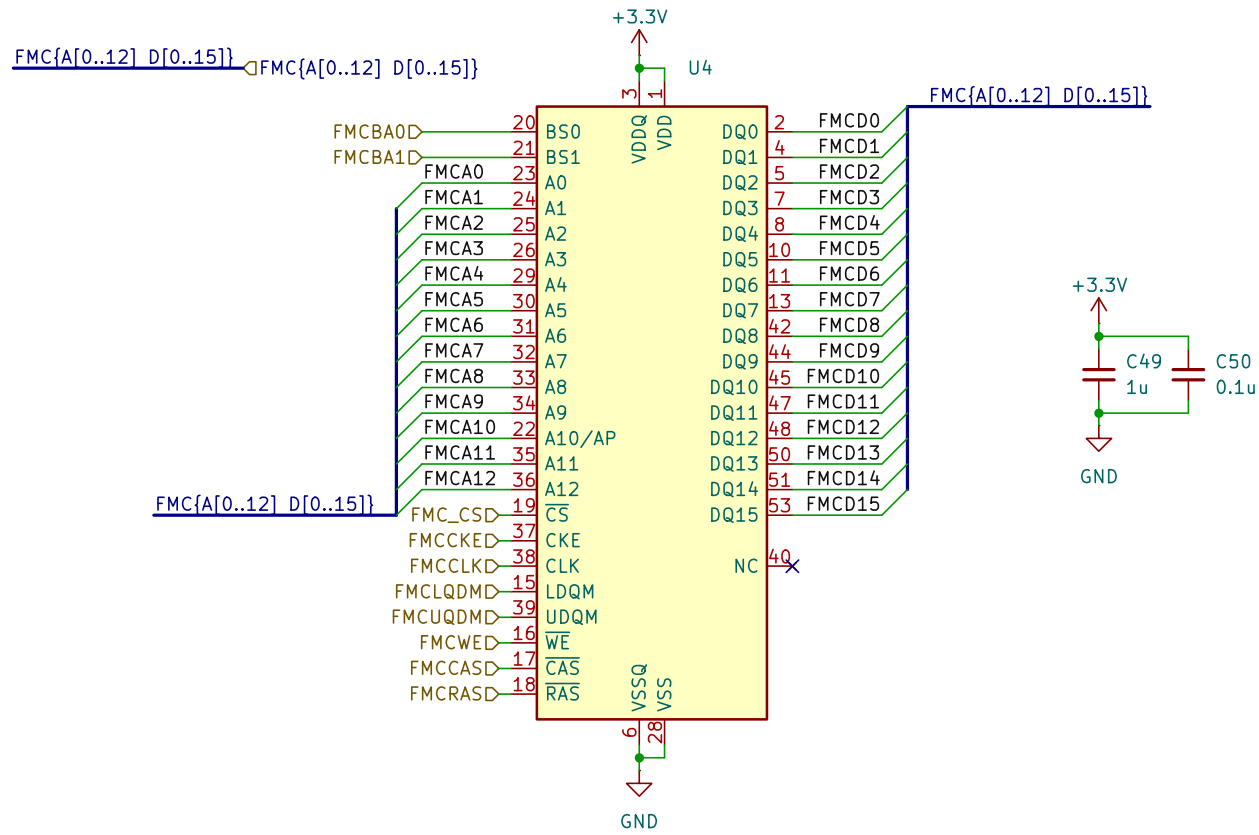

Sheet: /SDRAM/
File: SDRAM.kicad_sch

Title:

Size: A5	Date:	Rev:
KiCad E.D.A. 9.0.2		Id: 3/9

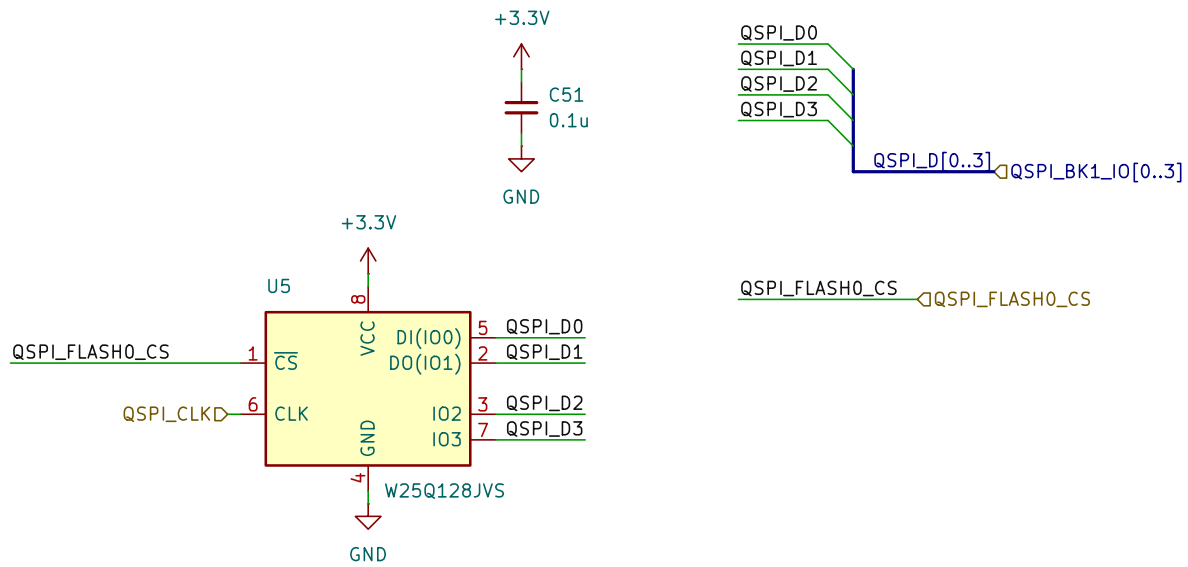

Sheet: /QSPI Flash/
File: QSPI.kicad_sch

Title:

Size: A5	Date:	**Rev:**
KiCad E.D.A. 9.0.2		Id: 4/9

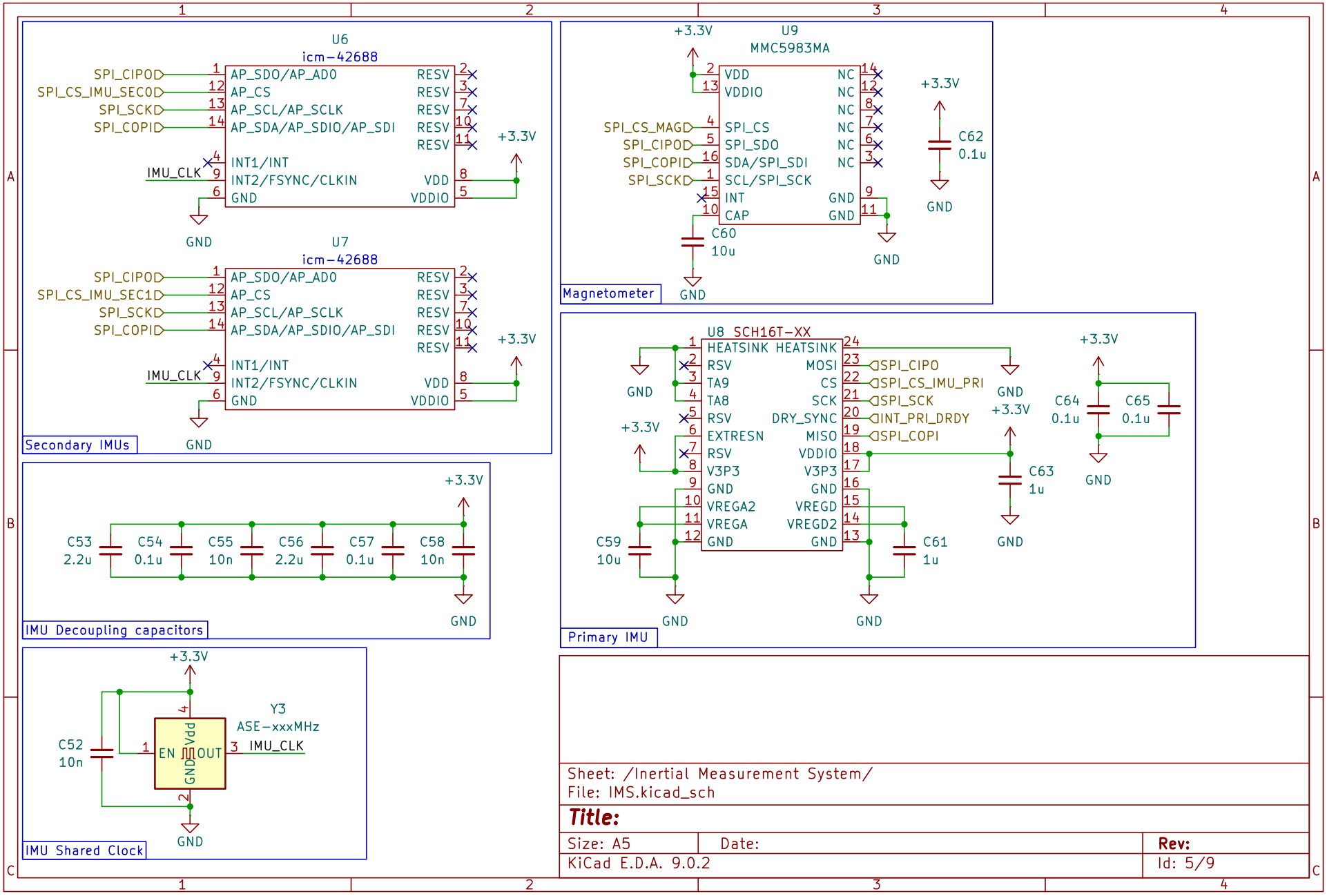
U6
icm-42688
SPI_CIPO
SPI_CS_IMU_SEC0
SPI_SCK
SPI_COPI
IMU_CLK
AP_SDO/AP_AD0
AP_CS
AP_SCL/AP_SCLK
AP_SDA/AP_SDIO/AP_SDI
INT1/INT
INT2/FSYNC/CLKIN
GND
RESV
VDD
VDDIO
+3.3V
U7
icm-42688
SPI_CS_IMU_SEC1
Secondary IMUs
U9
MMC5983MA
SPI_CS_MAG
VDD
VDDIO
SPI_CS
SPI_SDO
SDA/SPI_SDI
SCL/SPI_SCK
INT
CAP
NC
C60
10u
C62
0.1u
Magnetometer
U8 SCH16T-XX
HEATSINK
RSV
TA9
TA8
EXTRESN
V3P3
VREGA2
VREGA
MOSI
CS
SCK
DRY_SYNC
MISO
VREGD
VREGD2
SPI_CIPO
SPI_CS_IMU_PRI
SPI_SCK
INT_PRI_DRDY
SPI_COPI
C59
10u
C61
1u
C63
1u
C64
0.1u
C65
0.1u
Primary IMU
C53
2.2u
C54
0.1u
C55
10n
C56
2.2u
C57
0.1u
C58
10n
IMU Decoupling capacitors
C52
10n
Y3
ASE-xxxMHz
EN
Vdd
OUT
IMU_CLK
IMU Shared Clock
Sheet: /Inertial Measurement System/
File: IMS.kicad_sch
Title:
Size: A5
Date:
Rev:
KiCad E.D.A. 9.0.2
Id: 5/9

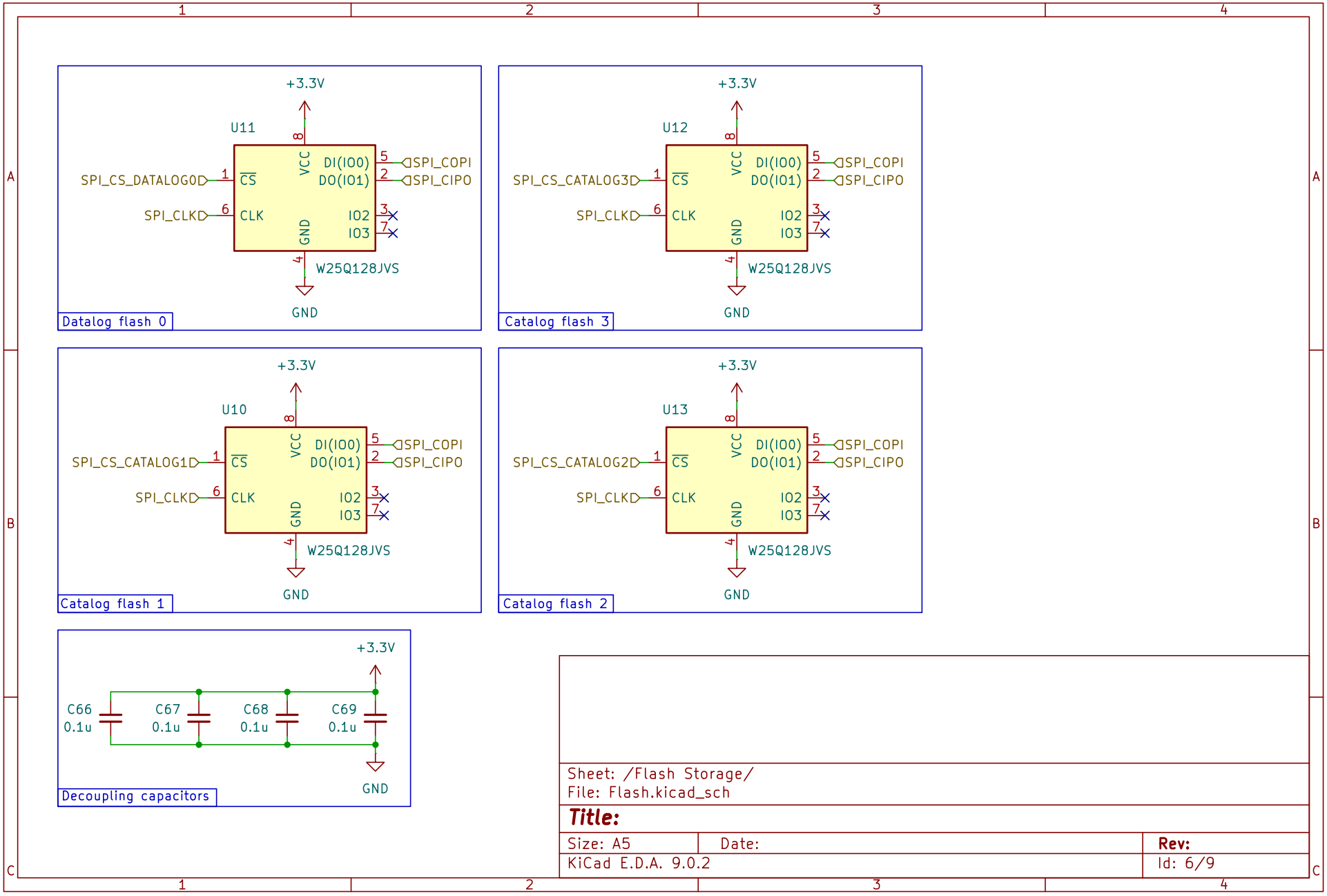
+3.3V
U11
SPI_CS_DATALOG0
SPI_CLK
CS
CLK
VCC
GND
DI(IO0)
DO(IO1)
IO2
IO3
SPI_COPI
SPI_CIPO
W25Q128JVS
GND
Datalog flash 0
+3.3V
U12
SPI_CS_CATALOG3
SPI_CLK
W25Q128JVS
GND
Catalog flash 3
+3.3V
U10
SPI_CS_CATALOG1
SPI_CLK
W25Q128JVS
GND
Catalog flash 1
+3.3V
U13
SPI_CS_CATALOG2
SPI_CLK
W25Q128JVS
GND
Catalog flash 2
+3.3V
C66 0.1u
C67 0.1u
C68 0.1u
C69 0.1u
GND
Decoupling capacitors
Sheet: /Flash Storage/
File: Flash.kicad_sch
Title:
Size: A5
Date:
Rev:
KiCad E.D.A. 9.0.2
Id: 6/9

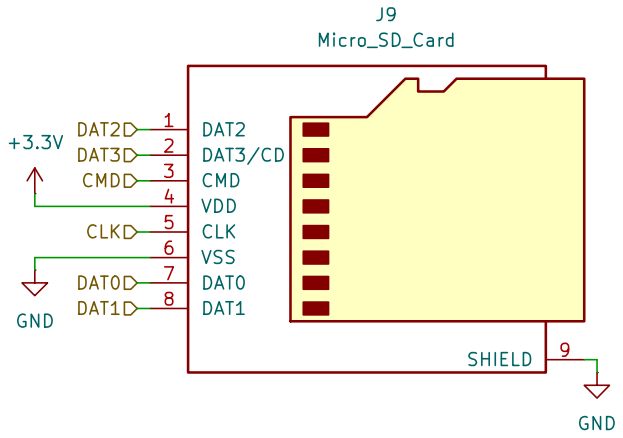

Sheet: /SD Card/
File: SDCard.kicad_sch

Title:

Size: A5	Date:	**Rev:**
KiCad E.D.A. 9.0.2		Id: 7/9

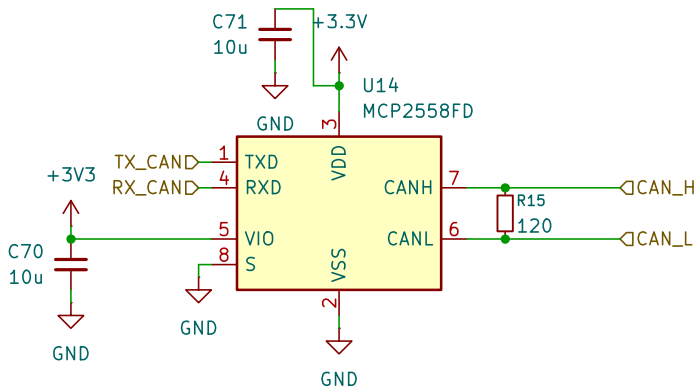

Sheet: /CAN Transceiver/
File: CAN.kicad_sch

Title:

Size: A5	Date:	**Rev:**
KiCad E.D.A. 9.0.2		Id: 8/9

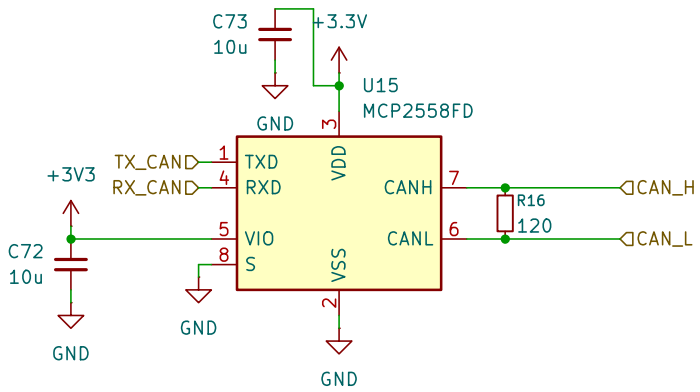

Sheet: /CAN Transceiver1/
File: CAN.kicad_sch

Title:

Size: A5	Date:	**Rev:**
KiCad E.D.A. 9.0.2		Id: 9/9