REPORT

Automatic Railway Gate Control Using Arduino

Submitted by:

Narender(2023uee1157)

Akshat Gupta(2023uee1168)

Paribhasha Rastogi(2023uee1139)

Keshav Bathla(2023uee1129)

Submitted to :

Dr. Man Mohan Garg

ACKNOWLEDGEMENT

We are pleased to acknowledge our sincere thanks to Dr. Man Mohan garg for their kind encouragement in doing this project and for completing it successfully. We are grateful to them.

We would like to express our sincere and deep sense of gratitude to him for valuable guidance, suggestions and constant encouragement paved way for the successful completion of our project work.

We wish to express our thanks to all Teaching and Non-teaching staff members of the Department of Electrical Engineering, MNIT JAIPUR who were helpful in many ways for the completion of the project.

Introduction

In the developing countries like India accidents at the railway crossing are increasing day by day. The main reason of these accidents is negligence of train drivers and gatekeepers. So this system is mostly designed to help railway. This system is also useful for various industries for safety purpose. After all security matters more. It includes opening and closing of gate by the use of Arduino based gate control. Opening and closing of railway level crossing gate involves manpower, which could be often causes incorrect leading to accidents. This system prevents the need of any human involvement at the railway level crossing.To open the gate, a command needs to be sent for the microcontroller to open the gate using motor driver integrated circuit. Both manual and automatically are achieved in this project in case of manual if train arrives and gate open condition IR sensor will detect the train and automatically close the gate. Our system mostly concentrates on the security.

The project is designed to achieve control on the railway level crossing gate. Opening and closing of railway level crossing gate involves manpower, which could be often incorrect leading to the accidents. The proposed system prevent any human involvement at the railway level crossing.

PROBLEM STATEMENT:

The present system attempts to automate the opening and closing of gates at a railway level crossing. In general, level crossing gates are operated manually by a gate keeper. The gate keeper receives the information about the train arrival from a near station. When the train starts to leave the railway station, the station in-charge or gate keeper this information to the closest gatekeeper to get ready for arriving of train. This human act be avoided by automating the process. Situations where the train is late due to some reasons or heavy rain, the gates remain closed for long durations causing dense traffic jam near the gates. This too can be prevented by automation.

Principle Behind Automatic Railway Gate Control System:

The system has two sensors that detect the train's arrival and sends a signal to the Arduino microcontroller. The Arduino board then processes the signal and sends a command to the motor driver to open or close the crossing gate. The gate remains closed until the train passes, and then it opens automatically.

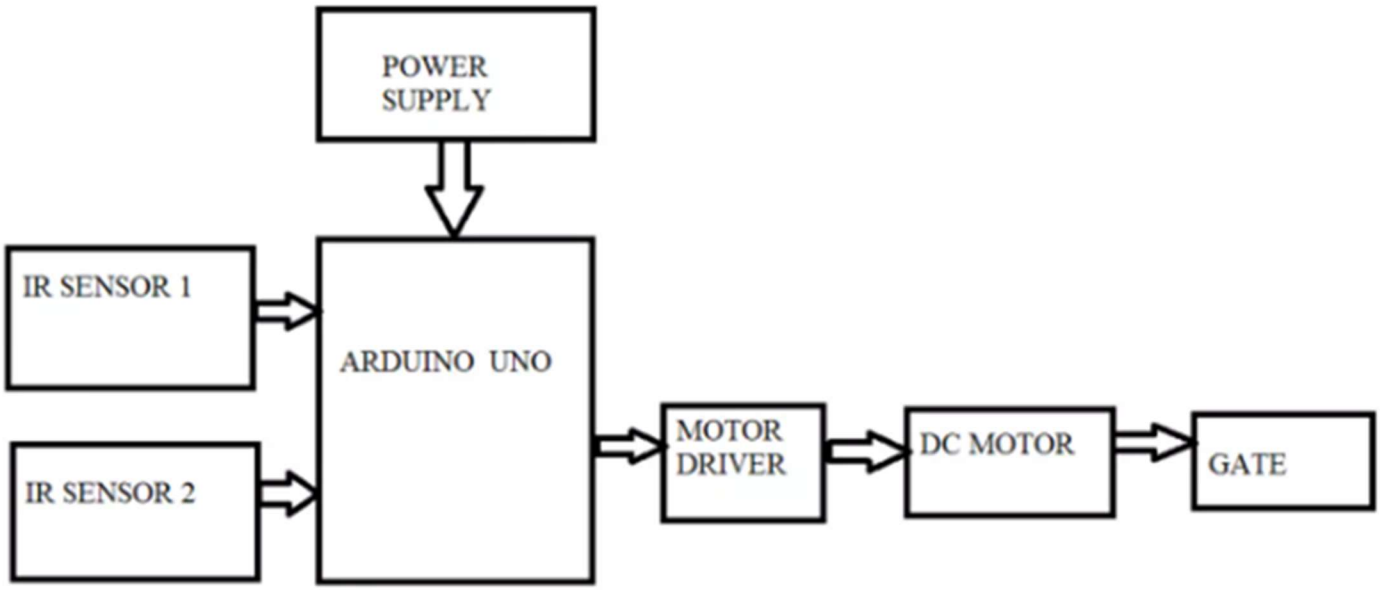

HARDWARE AND SOFTWARE REQUIREMENTS:

HARDWARE REQUIRED:

ARDUINO – UNO MICRO CONTROLLER

SERVO MOTOR

5V POWER SUPPLY

IR Sensor Modules(x2)

CONNECTING WIRES

Breadboard

SOFTWARE USED:

ARDUINO IDE

Hardware Description:

Arduino:

Arduino is an open-source electronics platform based on easy-to-use hardware and software. Arduino boards are able to read inputs - light on a sensor, a finger on a button, or a Twitter message - and turn it into an output - activating a motor, turning on an LED, publishing something online. The Arduino Uno is a microcontroller board based on the ATmega328 (datasheet). It has 14 digital input/output pins (of which 6 can be used as PWM outputs), 6 analog inputs, a 16 MHz crystal oscillator, a USB connection, a power jack, an ICSP header, and a reset button. The project is based on microcontroller board designs. These systems provide sets of digital and analog input/output (I/O) pins that can interface to various expansion boards (termed shields) and other circuits. The boards feature serial communication interfaces, including Universal Serial Bus (USB), for loading programs from personal computers. For programming the microcontrollers, the Arduino project provides an integrated development environment (IDE) based on a programming language named Processing, which also supports the languages C and C++.

Servo Motor:

A servomotor is a rotary actuator or linear actuator that allows for precise control of angular or linear position, velocity and acceleration. It consists of a suitable motor coupled to a sensor for position feedback. The servo motor is controlled by a signal (data) better known as a pulse-width modulator (PWM).

IR Sensor:

An infrared sensor is an electronic device, that emits in order to sense some aspects of the surroundings. An IR sensor can measure the heat of an object as well as detects the motion. These types of sensors measures only infrared radiation, rather than emitting it that is called as a passive IR sensor. An infrared sensor is an electronic device, that emits in order to sense some aspects of the surroundings. Usually in the infrared spectrum, all the objects radiate some form of thermal radiations. These types of radiations are invisible to our eyes, but can be detected by an infrared sensor.

SOFTWARE DESCRIPTION:

ARDUINO IDE: The Arduino Integrated Development Environment - or Arduino Software (IDE) - contains a text editor for writing code, a message area, a text console, a toolbar with buttons for common functions and a series of menus. It connects to the Arduino and Genuino hardware to upload programs and communicate with them.

How Does the Automatic Railway Gate Control System Work?

The railway gate control system uses two IR sensors placed on either side of the railway track. These sensors are connected to an Arduino board, which acts as the brain of the whole system.

When a train approaches the crossing line, it breaks the IR rays between the two sensors, and then the Arduino board receives a signal. This signal triggers the crossing gate motor, which closes the gate to prevent any vehicles or pedestrians from crossing the railway track.

Once the train has passed, the IR rays are re-established between them, and the Arduino board sends a signal to the gate motor to open the gate and allow vehicles and pedestrians to cross the railway track safely.

Advantages of an Automatic Railway Gate Control System?

- **I***ncreased safety*
- *Improved efficiency*
- *Reduced operating costs*
- *Better traffic control*
- *Enhanced convenience*

Conclusion:

The automatic railway gate control system using an Arduino UNO and IR sensors is a simple and efficient solution to prevent accidents at railway crossings 99%. By implementing the whole system, we can ensure the safety of passengers as well as vehicle drivers, and reduce the number of accidents at railway crossings.