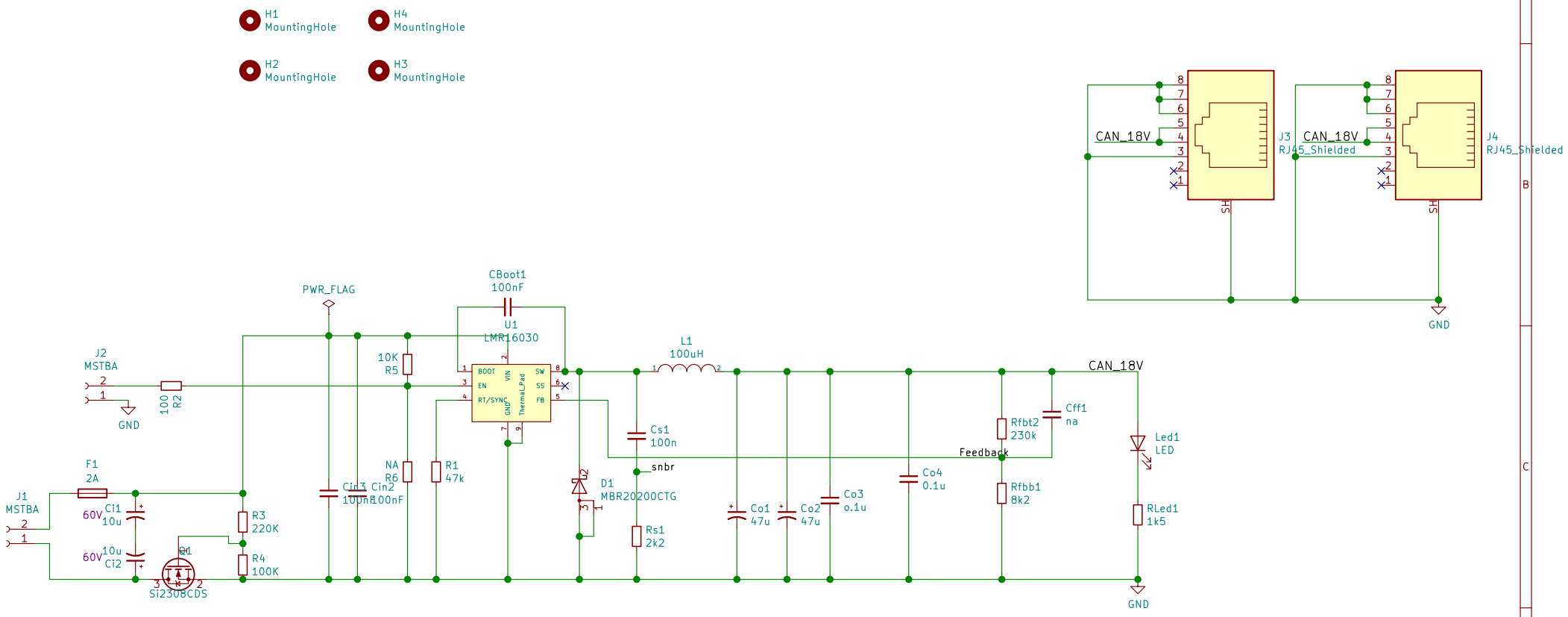

Sheet: /
File: fonte_18V.sch

Title:

Size: A4	Date:	Rev:
KiCad E.D.A. kicad 5.1.4-e60b26684ubuntu18.04.1		Id: 1/1