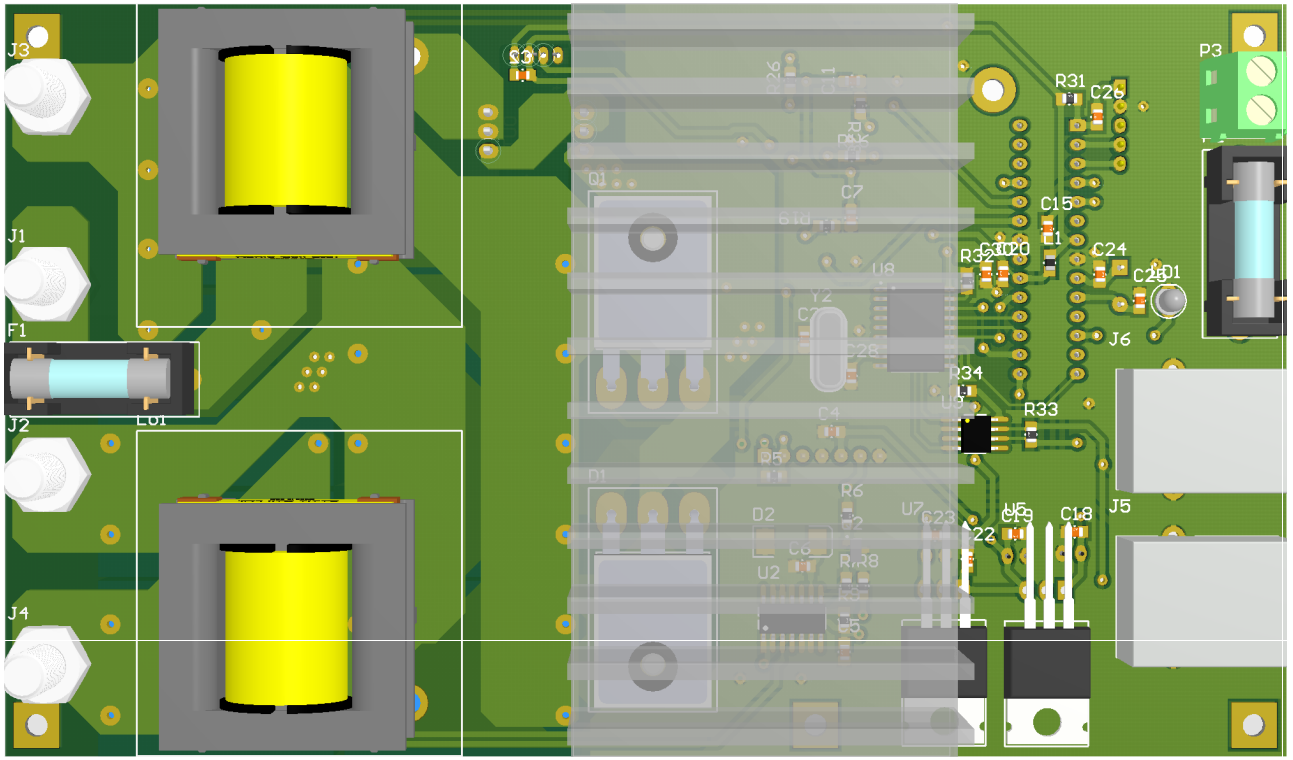
J3
J1
F1
J2
J4
P3
R31
C26
C15
C24
J6
R34
R33
J5
C18
C7
U8
Q1
D1
D2
U2
U7
C23
C4
R5
R6
R8
C6
C28
Y2
C22

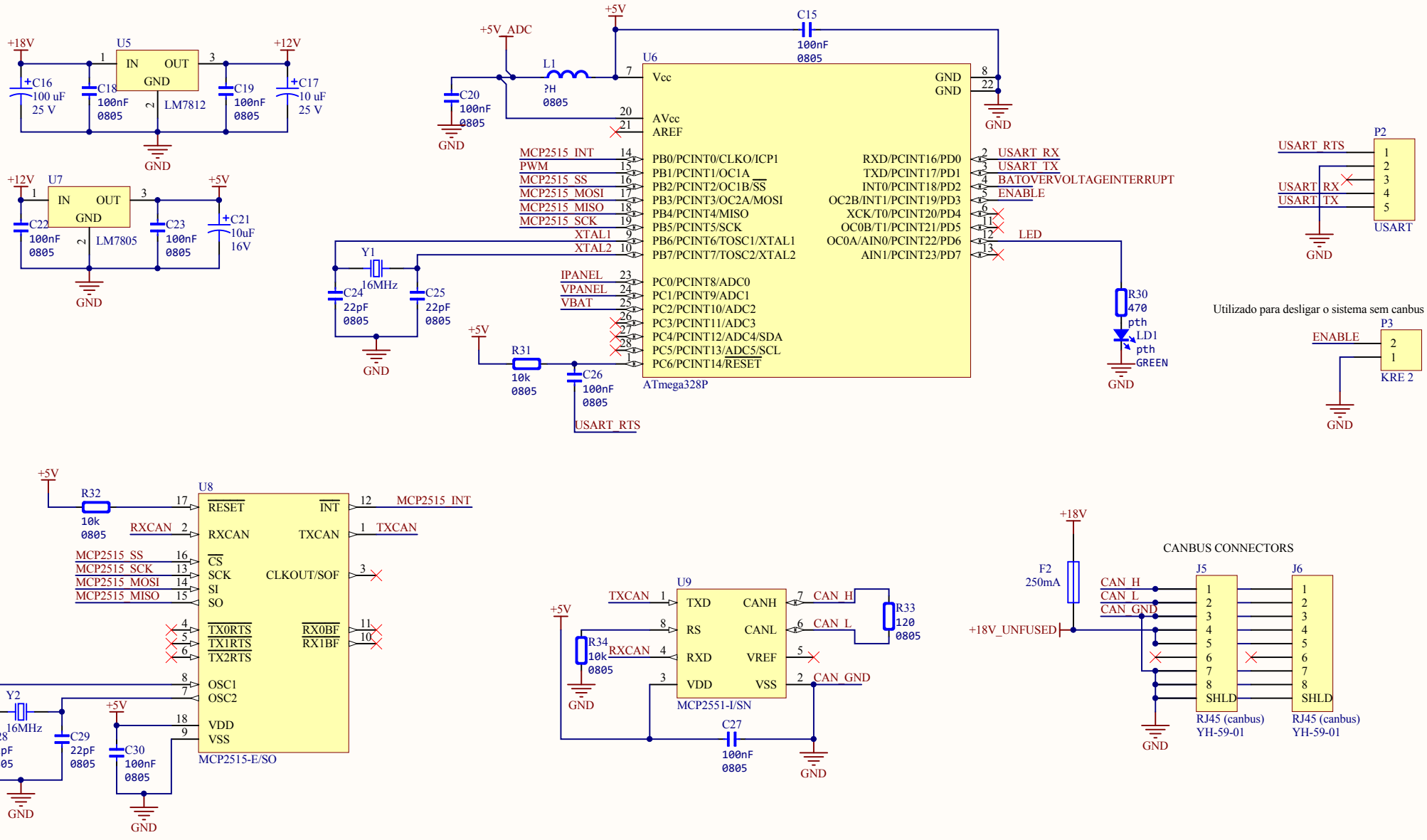
+18V
U5
IN
OUT
GND
LM7812
+12V
+C16
100 uF
25 V
C18
100nF
0805
C19
100nF
0805
+C17
10 uF
25 V
GND
+12V
U7
IN
OUT
GND
LM7805
+5V
C22
100nF
0805
C23
100nF
0805
+C21
10uF
16V
GND
+5V_ADC
+5V
C15
100nF
0805
L1
?H
0805
C20
100nF
0805
GND
U6
Vcc
GND
GND
AVcc
AREF
MCP2515_INT
PWM
MCP2515_SS
MCP2515_MOSI
MCP2515_MISO
MCP2515_SCK
XTAL1
XTAL2
PB0/PCINT0/CLKO/ICP1
PB1/PCINT1/OC1A
PB2/PCINT2/OC1B/SS
PB3/PCINT3/OC2A/MOSI
PB4/PCINT4/MISO
PB5/PCINT5/SCK
PB6/PCINT6/TOSC1/XTAL1
PB7/PCINT7/TOSC2/XTAL2
RXD/PCINT16/PD0
TXD/PCINT17/PD1
INT0/PCINT18/PD2
OC2B/INT1/PCINT19/PD3
XCK/T0/PCINT20/PD4
OC0B/T1/PCINT21/PD5
OC0A/AIN0/PCINT22/PD6
AIN1/PCINT23/PD7
USART_RX
USART_TX
BATOVERVOLTAGEINTERRUPT
ENABLE
LED
IPANEL
VPANEL
VBAT
PC0/PCINT8/ADC0
PC1/PCINT9/ADC1
PC2/PCINT10/ADC2
PC3/PCINT11/ADC3
PC4/PCINT12/ADC4/SDA
PC5/PCINT13/ADC5/SCL
PC6/PCINT14/RESET
ATmega328P
Y1
16MHz
C24
22pF
0805
C25
22pF
0805
GND
+5V
R31
10k
0805
C26
100nF
0805
USART_RTS
R30
470
pth
LD1
pth
GREEN
GND
P2
USART_RTS
USART_RX
USART_TX
USART
GND
Utilizado para desligar o sistema sem canbus
P3
ENABLE
KRE 2
GND
+5V
R32
10k
0805
U8
RESET
INT
MCP2515_INT
RXCAN
RXCAN
TXCAN
TXCAN
MCP2515_SS
MCP2515_SCK
MCP2515_MOSI
MCP2515_MISO
CS
SCK
SI
SO
CLKOUT/SOF
TX0RTS
TX1RTS
TX2RTS
RX0BF
RX1BF
OSC1
OSC2
VDD
VSS
MCP2515-E/SO
Y2
16MHz
C28
22pF
0805
C29
22pF
0805
+5V
C30
100nF
0805
GND
GND
+5V
TXCAN
U9
TXD
CANH
CAN_H
R33
120
0805
RS
CANL
CAN_L
R34
10k
0805
RXCAN
RXD
VREF
VDD
VSS
CAN_GND
MCP2551-I/SN
C27
100nF
0805
GND
GND
+18V
F2
250mA
+18V_UNFUSED
CANBUS CONNECTORS
CAN_H
CAN_L
CAN_GND
J5
J6
SHLD
SHLD
RJ45 (canbus)
YH-59-01
RJ45 (canbus)
YH-59-01
GND
Title
*
Size
A4
Number
Revision
Date:
08/12/2017
Sheet of
File:
C:\João Antônio Cardoso\..\atmega.SchDoc
Drawn By:

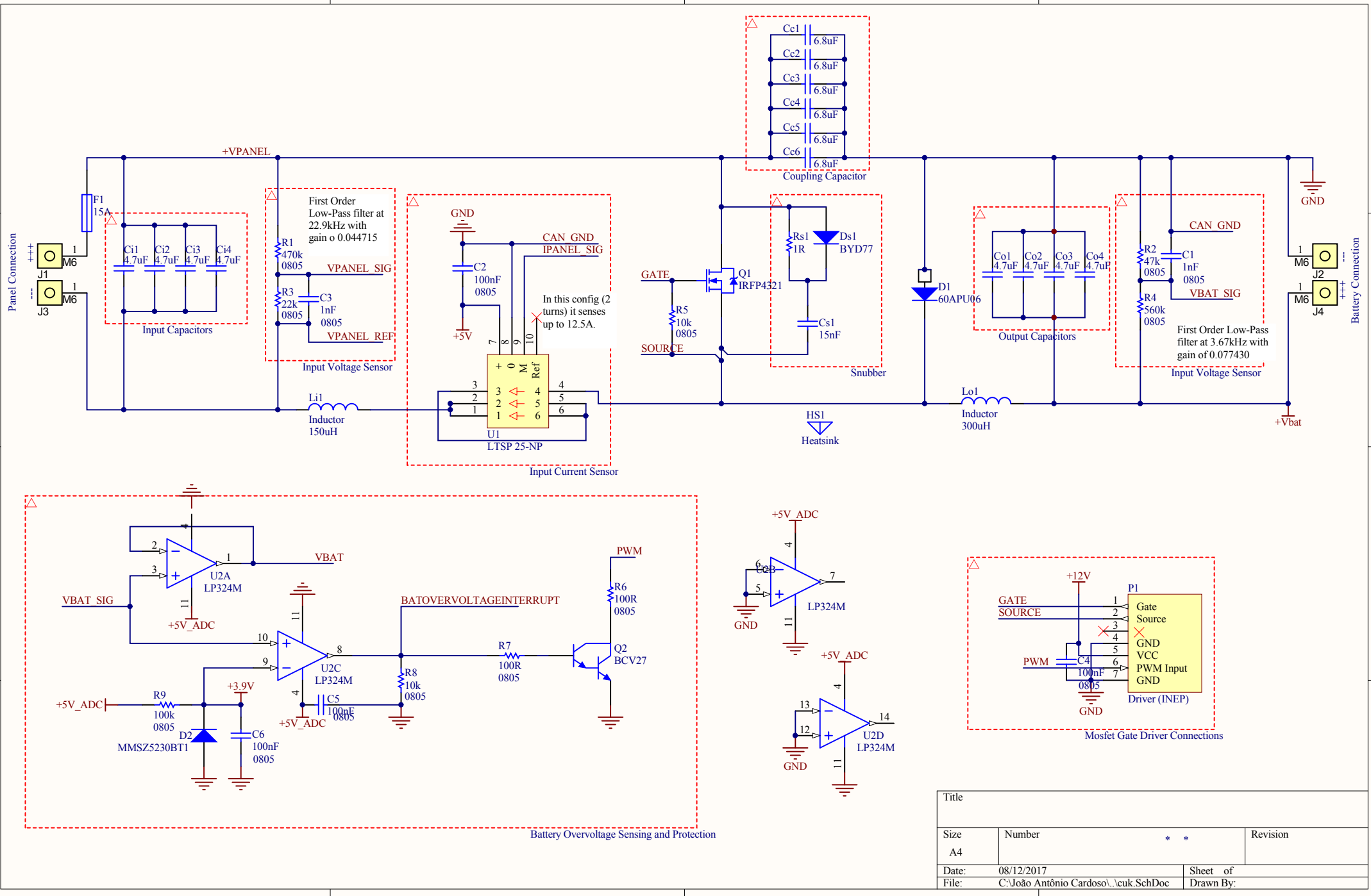

Title		
Size A4	Number * *	Revision
Date: 08/12/2017		Sheet of
File: C:\João Antônio Cardoso\..\cuk.SchDoc		Drawn By:

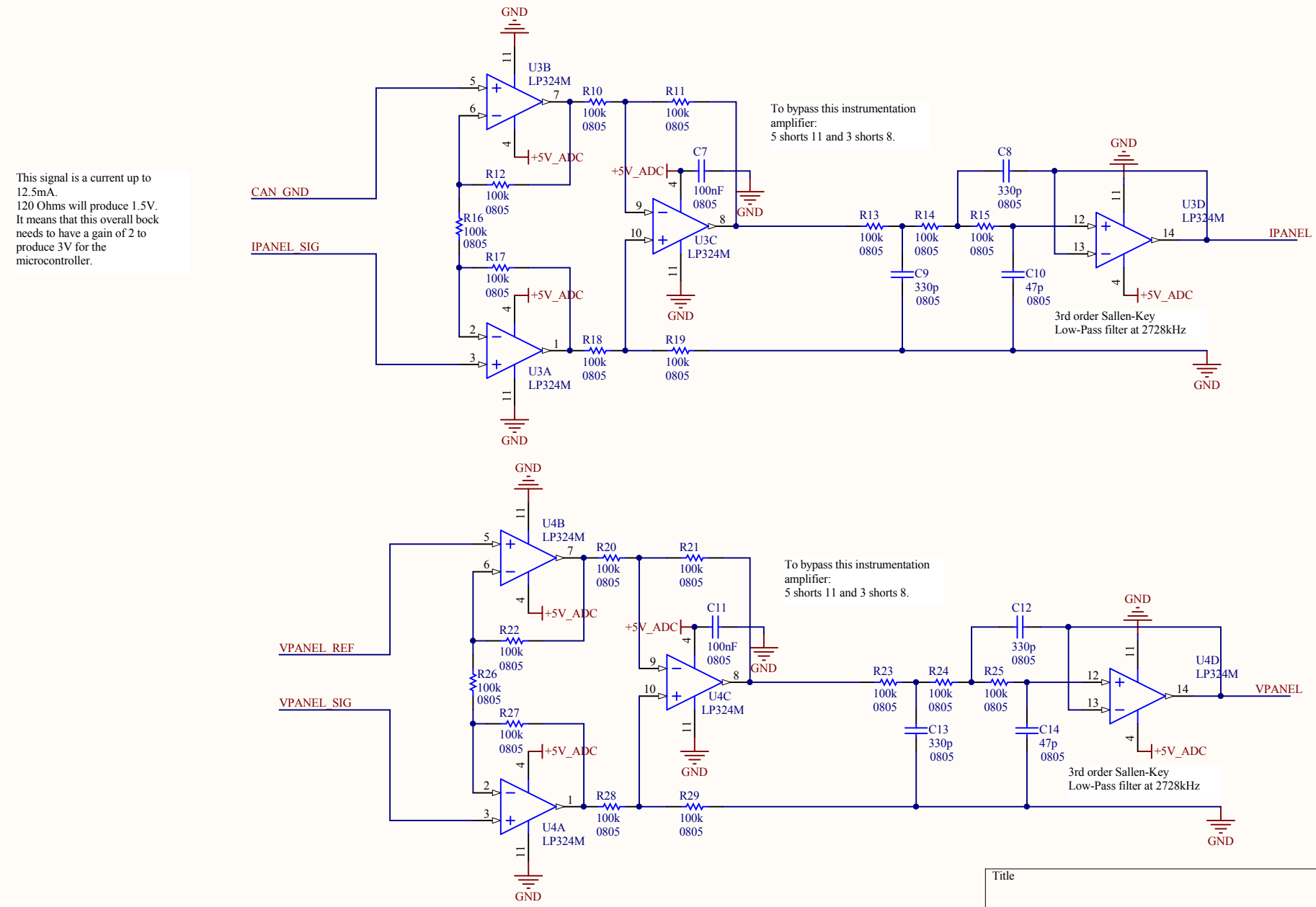
This signal is a current up to 12.5mA.
120 Ohms will produce 1.5V.
It means that this overall bock needs to have a gain of 2 to produce 3V for the microcontroller.
CAN_GND
IPANEL_SIG
VPANEL_REF
VPANEL_SIG
GND
+5V_ADC
U3B LP324M
U3A LP324M
U3C LP324M
U3D LP324M
U4B LP324M
U4A LP324M
U4C LP324M
U4D LP324M
R10 100k 0805
R11 100k 0805
R12 100k 0805
R13 100k 0805
R14 100k 0805
R15 100k 0805
R16 100k 0805
R17 100k 0805
R18 100k 0805
R19 100k 0805
R20 100k 0805
R21 100k 0805
R22 100k 0805
R23 100k 0805
R24 100k 0805
R25 100k 0805
R26 100k 0805
R27 100k 0805
R28 100k 0805
R29 100k 0805
C7 100nF 0805
C8 330p 0805
C9 330p 0805
C10 47p 0805
C11 100nF 0805
C12 330p 0805
C13 330p 0805
C14 47p 0805
To bypass this instrumentation amplifier:
5 shorts 11 and 3 shorts 8.
3rd order Sallen-Key Low-Pass filter at 2728kHz
IPANEL
VPANEL
Title
Size A4
Number
Revision
Date: 08/12/2017
Sheet of
File: C:\João Antônio Cardoso\..\signals.SchDoc
Drawn By:

Quantity	Value	Comment	Designator	Description	Footprint
1		60APU06	D1		to-247ac_horizontal
4	M6	M6	J1, J2, J3, J4		Parafuso
1	BYD77	BYD77	Ds1	1 Amp General Purpose Rectifier	DSO-C2/X2.3
1		ATmega328P	U6	8-bit AVR Microcontroller, 32KB Flash, 1KB EEPROM, 2KB SRAM, 28-pin PDIP, Industrial Grade (-40°C to 85°C)	DIP28-300(100)
1	15nF	15nF	Cs1	Capacitor	100nF
15	100nF	100nF	C2, C4, C5, C6, C7, C11, C15, C18, C19, C20, C22, C23, C26, C27, C30	Capacitor	0805C
2	1nF	1nF	C1, C3	Capacitor	0805C
2	47p	47p	C10, C14	Capacitor	0805C
4	22pF	22pF	C24, C25, C28, C29	Capacitor	0805C
4	330p	330p	C8, C9, C12, C13	Capacitor	0805C
4	4.7uF	4.7uF	Co1, Co2, Co3, Co4	Capacitor	CAP4U7 EPCOS
4	4.7uF	Cap	Ci1, Ci2, Ci3, Ci4	Capacitor	cap4u7
6	6.8uF	Cap	Cc1, Cc2, Cc3, Cc4, Cc5, Cc6	Capacitor	CAP4U7 EPCOS
2		16MHz	Y1, Y2	Crystal	HC49-US-THT
1		LTSP 25-NP	U1	Current Transducer LTSP (25 A)	LTSP 25-NP
1		Driver (INEP)	P1	Driver INEP (Soeiro)	Driver INEP
1	250mA	250mA	F2	Fuse	Porta Fusivel
1	15A	15A	F1	Fuse 5x20	Porta Fusivel
1		Heatsink	HS1	Generic Antenna	HS10425
1		USART	P2	Header, 5-Pin	HDR1X5
1		IRFP4321	Q1	HEXFET Power MOSFET	to-247ac_horizontal
1		MCP2551-I/SN	U9	High-Speed CAN Transceiver, 1 Mb/s, 4.5 to 5.5 V, 8-Pin SOIC (SN), Industrial Temperature, RoHS, Tube	SOIC08-150(50)
1	150uH	Inductor	Li1	Inductor	NEE-42-20-DEITADO
1	300uH	Inductor	Lo1	Inductor	NEE-42-20-DEITADO
1	?H	?H	L1	Inductor	0805L
1	GREEN	GREEN	LD1	LED	LED3MM
3		LP324M	U2, U3, U4	Micropower Quad Operational Amplifier	SOIC14-150(50)
1	BCV27	BCV27	Q2	NPN Darlington Bipolar Transistor	SOT95P240-3N
1		LM7805	U7	Positive-Voltage Regulator	TO220_deitado
1		LM7812	U5	Positive-Voltage Regulator	TO220_deitado
1	120	120	R33	Resistor	0805R
1	1R	1R	Rs1	Resistor	AXIAL-0.3
1	22k	22k	R3	Resistor	0805R
1	470	470	R30	Resistor	AXIAL-0.3
1	470k	470k	R1	Resistor	0805R
1	47k	47k	R2	Resistor	0805R
1	560k	560k	R4	Resistor	0805R
2	100R	100R	R6, R7	Resistor	0805R
21	100k	100k	R9, R10, R11, R12, R13, R14, R15, R16, R17, R18, R19, R20, R21, R22, R23, R24, R25, R26, R27, R28, R29	Resistor	0805R
5	10k	10k	R5, R8, R31, R32, R34	Resistor	0805R
1	10 uF	CapacitorPol	C17	Solid Aluminum Capacitor with Organic Semiconductor Electrolyte: 100uF, 10V, Bulk Pack	cap10uF16V
1	100 uF	CapacitorPol	C16	Solid Aluminum Capacitor with Organic Semiconductor Electrolyte: 100uF, 10V, Bulk Pack	cap10uF16V
1	10uF	CapacitorPol	C21	Solid Aluminum Capacitor with Organic Semiconductor Electrolyte: 100uF, 10V, Bulk Pack	cap10uF16V
1		MCP2515-E/SO	U8	Stand-Alone CAN Controller With SPI Interface, 18-Pin SOIC, Extended Temperature	WSO18_L
1	KRE 2	KRE 2	P3	Terminal Block 1x2	KRE_2
2	YH-59-01	RJ45 (canbus)	J5, J6	YH-59-01	ASSMANN A-2004-2-4-LP/FS
1	MMSZ5	MMSZ523(	D2	Zener smd 3.9V	DSO-C2/X3.3

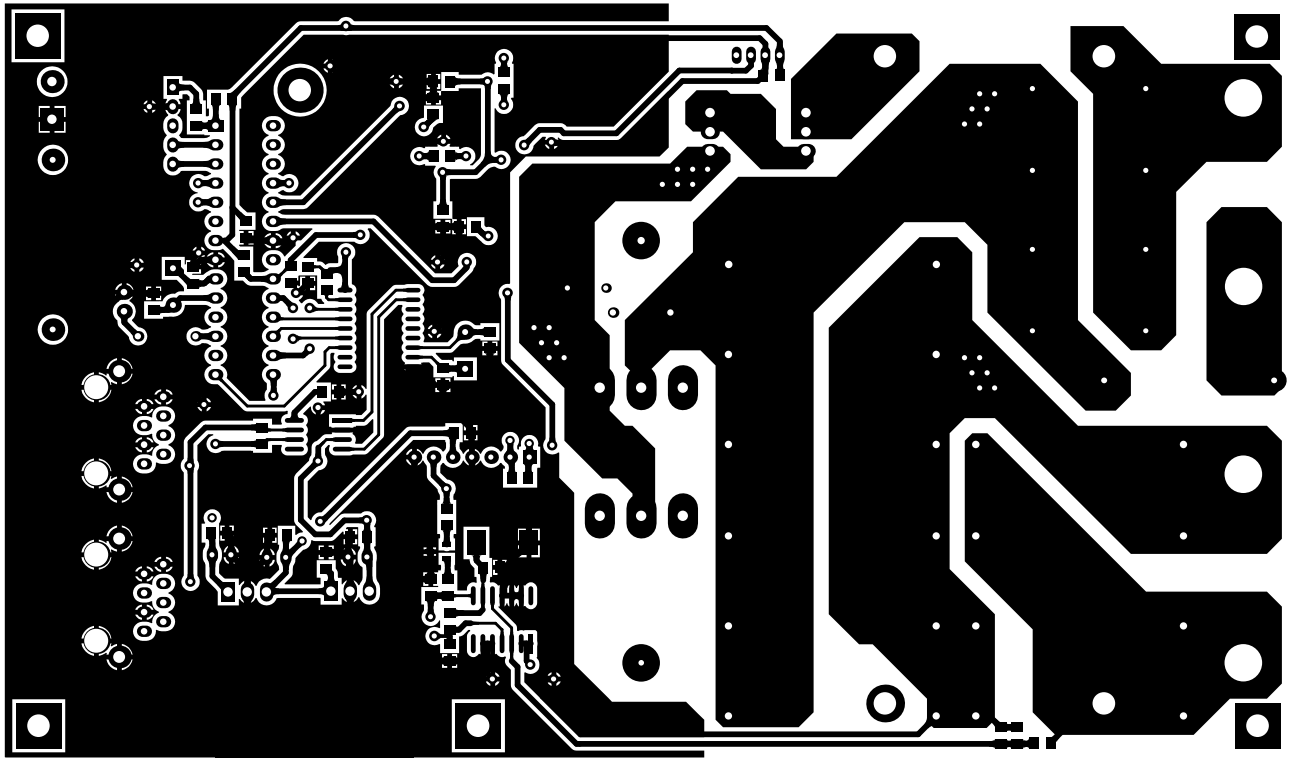

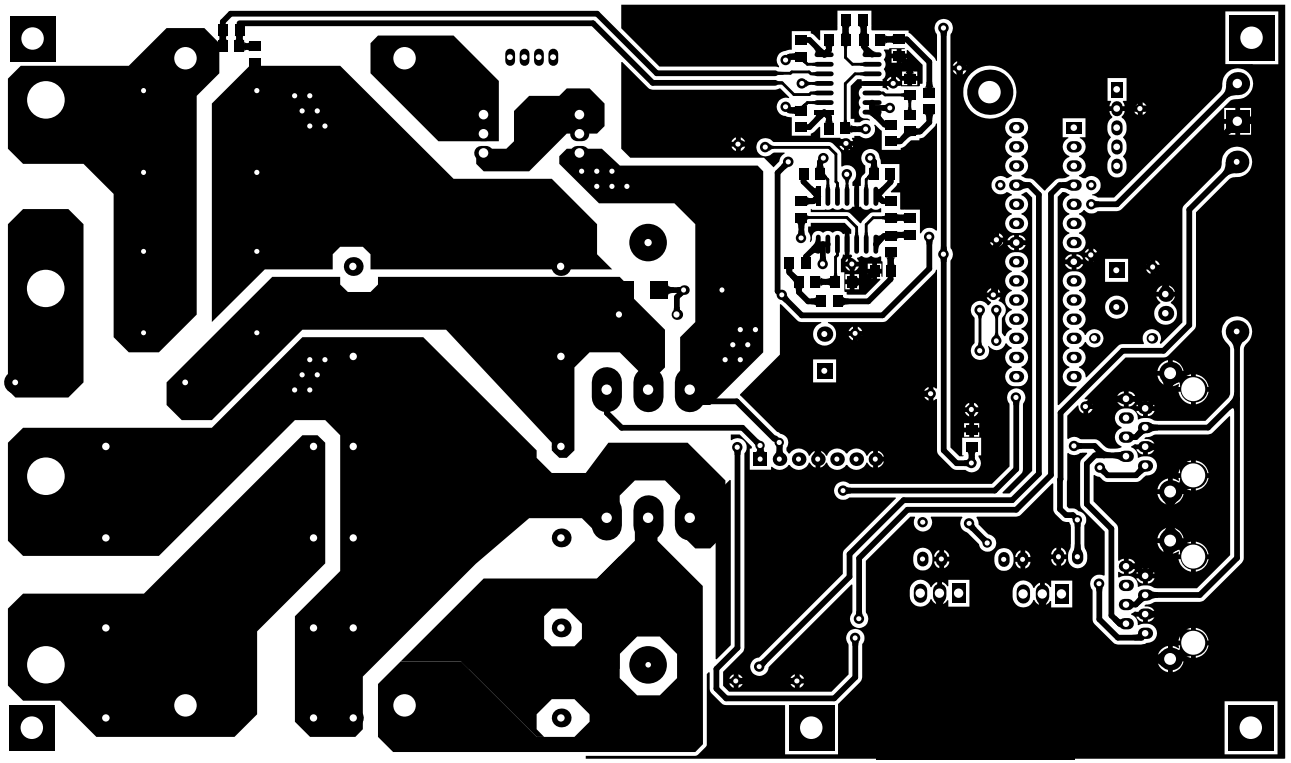

U1
IN
OUT
GND
C1
C2
C3
C4
C5
Co1
Co2
Co3
Co4
Ci1
Ci2
Ci3
Ci4
R3
Ri3
Ri4
Ri5
Ri6
Ri7
Ri8
R1
R2
R4
R5
R6
R7
R8
R9
R10
R11
R12
R13
R14
R15
R16
R17
R18
R19
R20
R21
R22
R23
R24
R25
R26
R27
R28
R29
R30
C8
C9
C10
C11
C12
C13
C14
C15
C16
C17
C18
C19
C20
C21
C22
Ds1
Ls1
Cs1
Y1
P1
P2
U2

170,00
100,001
H$1
L11
J3
J1
F1
L01
J2
J4
C3
Q1
D1
D2
J6
J5
P3
F2
C26
R31
C15
L1
C24
C20
R32
C25
R34
U8
Y2
C28
C29
R33
U9
C4
R5
R6
Q2
C6
U2
R8
R9
C5
C18
C19
C22
C23
U7
C1R2
R4

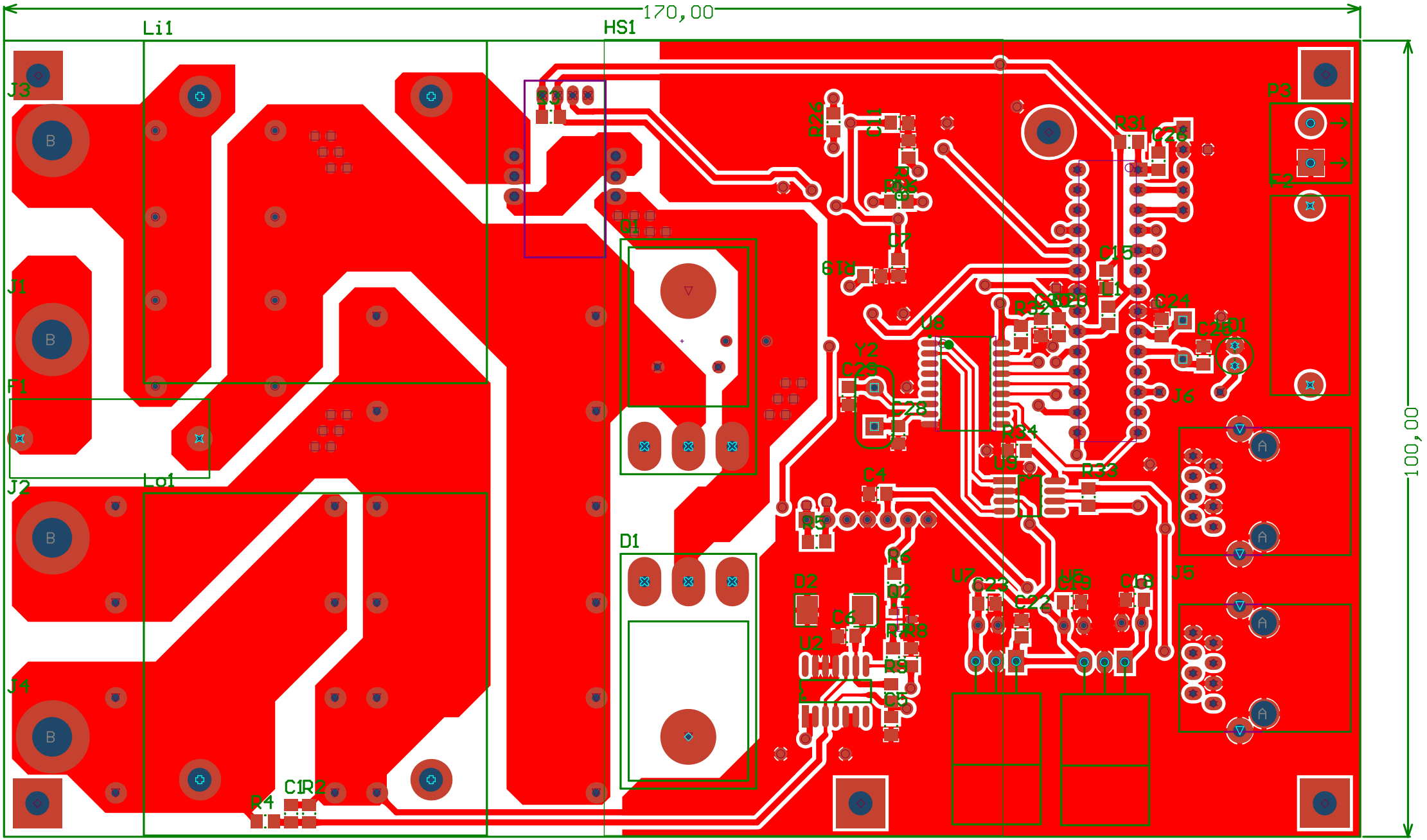
170,00
100,00
Li1
HS1
Lo1
J3
J1
J2
J4
F1
F2
P3
J5
J6
D1
D2
Q1
Q2
U2
U3
U5
U7
Y2
C1
C2
C3
C4
C5
C6
C7
C15
C22
C23
C24
C25
C26
C28
C29
R1
R2
R3
R4
R5
R6
R8
R9
R31
R32
R33
R34
R35
R36

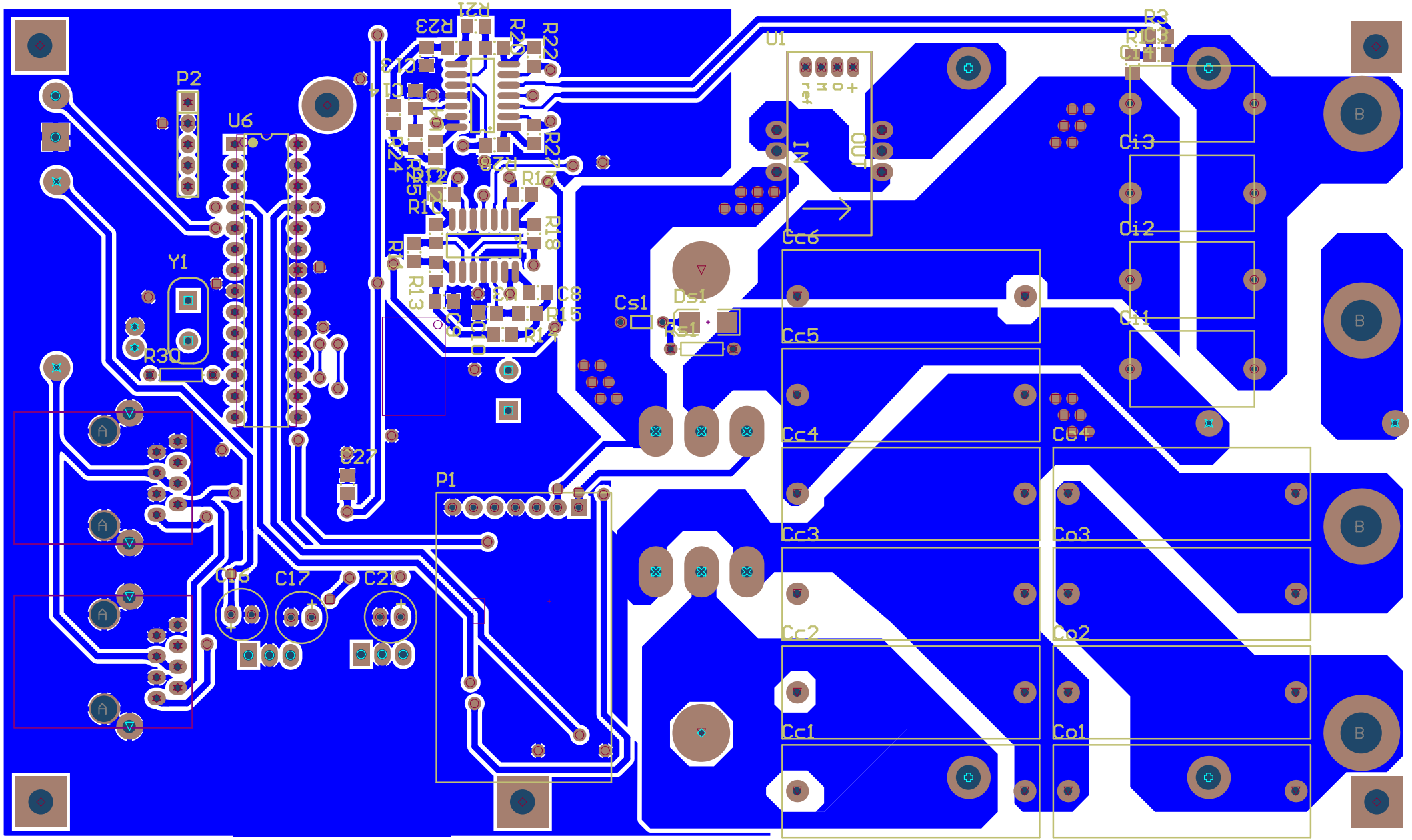
P2
U6
Y1
R30
P1
U1
Cc6
Cc5
Cc4
Cc3
Cc2
Cc1
Ci3
Ci2
Ci1
Co4
Co3
Co2
Co1
Cs1
Ds1
C8
C17
C21
R15
R18
R23
R22
R21
R24
R25
R26
R27
R28
R29
R31
R32
R33
R34
R35
R36
R37
R38
R39
R40
R41
R42
R43
R44
R45
R46
R47
R48
R49
R50
R51
R52
R53
R54
R55
R56
R57
R58
R59
R60
R61
R62
R63
R64
R65
R66
R67
R68
R69
R70