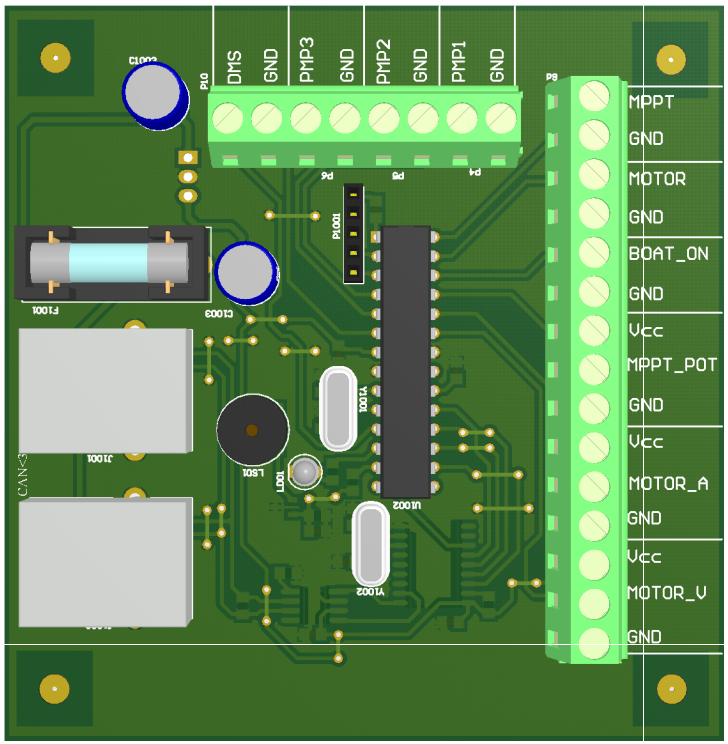
DMS
GND
PMP3
GND
PMP2
GND
PMP1
GND
MPPT
GND
MOTOR
GND
BOAT_ON
GND
Vcc
MPPT_POT
GND
Vcc
MOTOR_A
GND
Vcc
MOTOR_V
GND

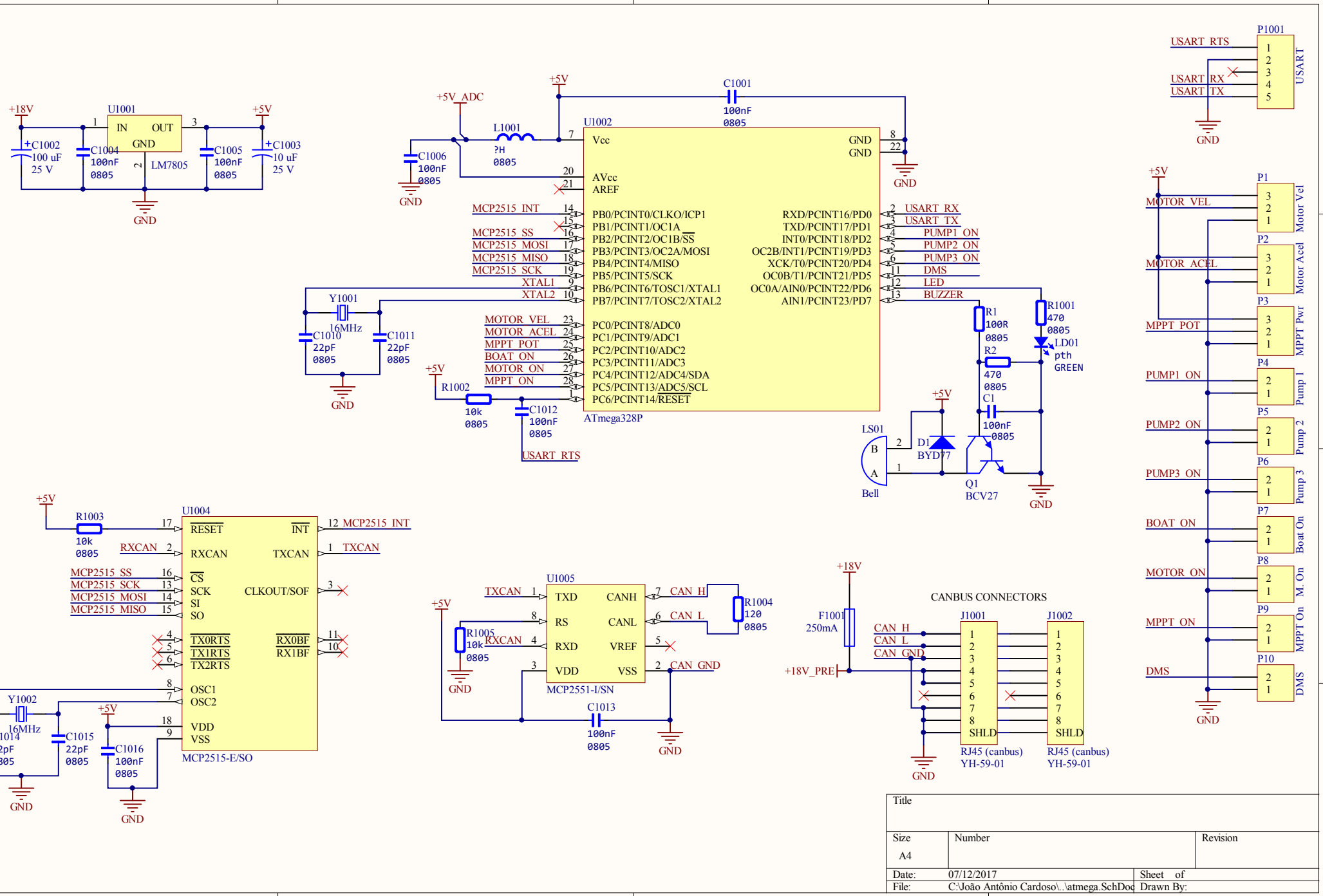
+18V
U1001
IN
OUT
GND
LM7805
C1002
100 uF
25 V
C1004
100nF
0805
C1005
100nF
0805
C1003
10 uF
25 V
+5V
GND
+5V_ADC
L1001
?H
0805
C1006
100nF
0805
C1001
100nF
0805
U1002
Vcc
GND
AVcc
AREF
PB0/PCINT0/CLKO/ICP1
PB1/PCINT1/OC1A
PB2/PCINT2/OC1B/SS
PB3/PCINT3/OC2A/MOSI
PB4/PCINT4/MISO
PB5/PCINT5/SCK
PB6/PCINT6/TOSC1/XTAL1
PB7/PCINT7/TOSC2/XTAL2
PC0/PCINT8/ADC0
PC1/PCINT9/ADC1
PC2/PCINT10/ADC2
PC3/PCINT11/ADC3
PC4/PCINT12/ADC4/SDA
PC5/PCINT13/ADC5/SCL
PC6/PCINT14/RESET
RXD/PCINT16/PD0
TXD/PCINT17/PD1
INT0/PCINT18/PD2
OC2B/INT1/PCINT19/PD3
XCK/T0/PCINT20/PD4
OC0B/T1/PCINT21/PD5
OC0A/AIN0/PCINT22/PD6
AIN1/PCINT23/PD7
ATmega328P
MCP2515_INT
MCP2515_SS
MCP2515_MOSI
MCP2515_MISO
MCP2515_SCK
XTAL1
XTAL2
MOTOR_VEL
MOTOR_ACEL
MPPT_POT
BOAT_ON
MOTOR_ON
MPPT_ON
USART_RX
USART_TX
PUMP1_ON
PUMP2_ON
PUMP3_ON
DMS
LED
BUZZER
Y1001
16MHz
C1010
22pF
0805
C1011
22pF
0805
R1002
10k
0805
C1012
100nF
0805
USART_RTS
R1
100R
0805
R2
470
0805
R1001
470
0805
LD01
pth
GREEN
LS01
Bell
D1
BYD77
C1
100nF
0805
Q1
BCV27
P1001
USART
P1
Motor Vel
P2
Motor Acel
P3
MPPT Pwr
P4
Pump 1
P5
Pump 2
P6
Pump 3
P7
Boat On
P8
M. On
P9
MPPT On
P10
DMS
R1003
10k
0805
U1004
RESET
INT
RXCAN
TXCAN
CS
SCK
SI
SO
CLKOUT/SOF
TX0RTS
TX1RTS
TX2RTS
RX0BF
RX1BF
OSC1
OSC2
VDD
VSS
MCP2515-E/SO
RXCAN
TXCAN
Y1002
16MHz
C1014
22pF
0805
C1015
22pF
0805
C1016
100nF
0805
U1005
TXD
RS
RXD
VDD
CANH
CANL
VREF
VSS
MCP2551-I/SN
CAN_H
CAN_L
CAN_GND
R1004
120
0805
R1005
10k
0805
C1013
100nF
0805
F1001
250mA
+18V_PRE
CANBUS CONNECTORS
J1001
J1002
SHLD
RJ45 (canbus)
YH-59-01
Title
Size
A4
Number
Revision
Date:
07/12/2017
Sheet of
File:
C:\João Antônio Cardoso\..\atmega.SchDoc
Drawn By:

Quantity	Value	Comment	Designator	Description	Footprint
1		ATmega328P	U1002	8-bit AVR Microcontroller, 32KB Flash, 1KB EEPROM, 2KB SRAM, 28-pin PDIP, Industrial Grade (-40°C to 85°C)	DIP28-300(100)
4	22pF	22pF	C1010, C1011, C1014, C1015	Capacitor	0805C
8	100nF	100nF	C1, C1001, C1004, C1005, C1006, C1012, C1013, C1016	Capacitor	0805C
2		16MHz	Y1001, Y1002	Crystal	HC49-US-THT
1	BYD77	BYD77	D1	Default Diode	DSO-C2/X2.3
1		Bell	LS01	Electrical Bell	Buzzer5V
1		250mA	F1001	Fuse	Porta Fusivel
1	KRE 3	Motor Acel	P2	Header, 3-Pin	KRE_3
1	KRE 3	Motor Vel	P1	Header, 3-Pin	KRE_3
1	KRE 3	MPPT Pwr	P3	Header, 3-Pin	KRE_3
1		USART	P1001	Header, 5-Pin	HDR1X5
1		MCP2551-I/SN	U1005	High-Speed CAN Transceiver, 1 Mb/s, 4.5 to 5.5 V, 8-Pin SOIC (SN), Industrial Temperature, RoHS, Tube	SOIC08-150(50)
1	?H	?H	L1001	Inductor	0805L
1	GREEN	GREEN	LD01	LED	LED3MM
1	BCV27	BCV27	Q1	NPN Darlington Bipolar Transistor	SOT95P240-3N
1		LM7805	U1001	Positive-Voltage Regulator	TO220_deitado
1	100R	100R	R1	Resistor	0805R
1	120	120	R1004	Resistor	0805R
2	470	470	R2, R1001	Resistor	0805R
3	10k	10k	R1002, R1003, R1005	Resistor	0805R
1	10 uF	CapacitorPol	C1003	Solid Aluminum Capacitor with Organic Semiconductor Electrolyte: 100uF, 10V, Bulk Pack	CP3.5mm-8.0mm
1	100 uF	CapacitorPol	C1002	Solid Aluminum Capacitor with Organic Semiconductor Electrolyte: 100uF, 10V, Bulk Pack	CP3.5mm-8.0mm
1		MCP2515-E/SO	U1004	Stand-Alone CAN Controller With SPI Interface, 18-Pin SOIC, Extended Temperature	WSO18_L
1	KRE 2	Boat On	P7	Terminal Block 1x2	KRE_2
1	KRE 2	DMS	P10	Terminal Block 1x2	KRE_2
1	KRE 2	M. On	P8	Terminal Block 1x2	KRE_2
1	KRE 2	MPPT On	P9	Terminal Block 1x2	KRE_2
1	KRE 2	Pump 1	P4	Terminal Block 1x2	KRE_2
1	KRE 2	Pump 2	P5	Terminal Block 1x2	KRE_2
1	KRE 2	Pump 3	P6	Terminal Block 1x2	KRE_2
2	YH-59-	RJ45 (canb	J1001, J1002	YH-59-01	ASSMANN A-2004-2-4-LP/FS

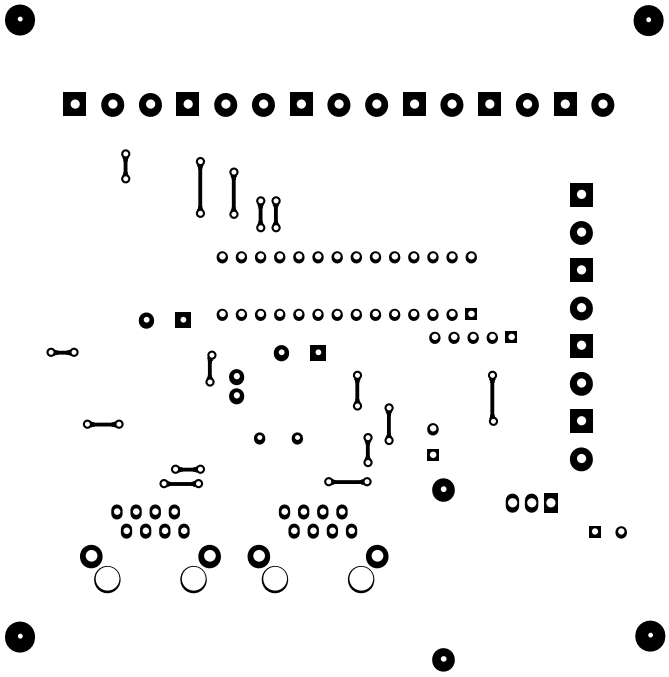

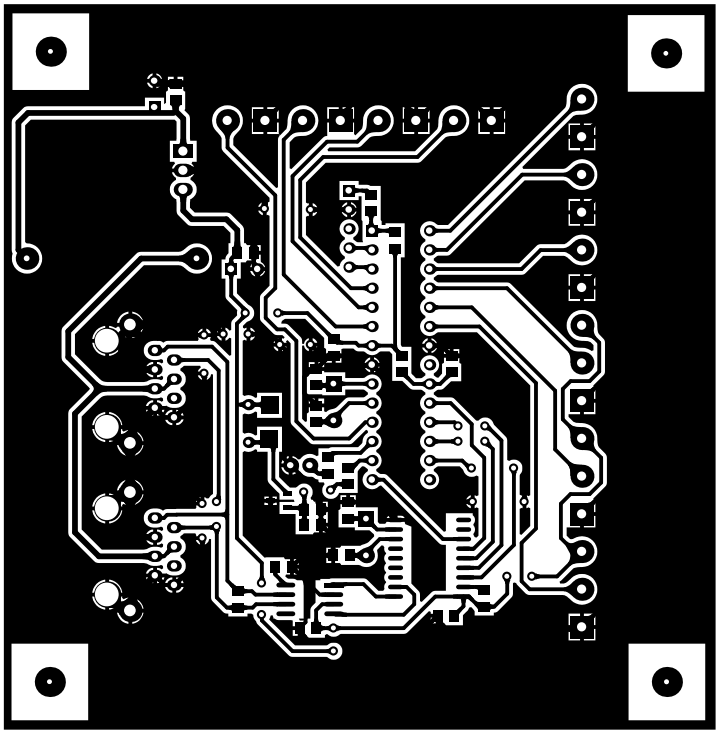

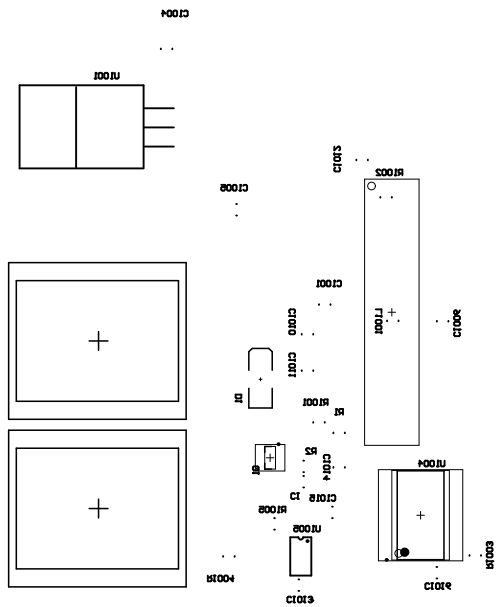

GND
PWR1
GND
PWR2
GND
PWR3
GND
PWR4
C1003
R1001
C1002
T1001
T1002
T1003
L801
D801
U1001
R1002
U1003
GND
V_ROTOR
VCC
GND
A_ROTOR
VCC
GND
BOAT_ON
VCC
MPPT_POT
GND
ROTOR
GND
MPPT
GND

C1002
P10
DMS
GND
PMP3
GND
PMP2
GND
PMP1
GND
P6
P5
P4
P9
MPPT
GND
P8
MOTOR
GND
P7
BOAT_ON
GND
P3
Vcc
MPPT_POT
GND
P2
Vcc
MOTOR_A
GND
P1
Vcc
MOTOR_V
GND
P1001
F1001
C1003
J1001
J1002
CAN<3
LS01
LD01
Y1001
U1002
Y1002

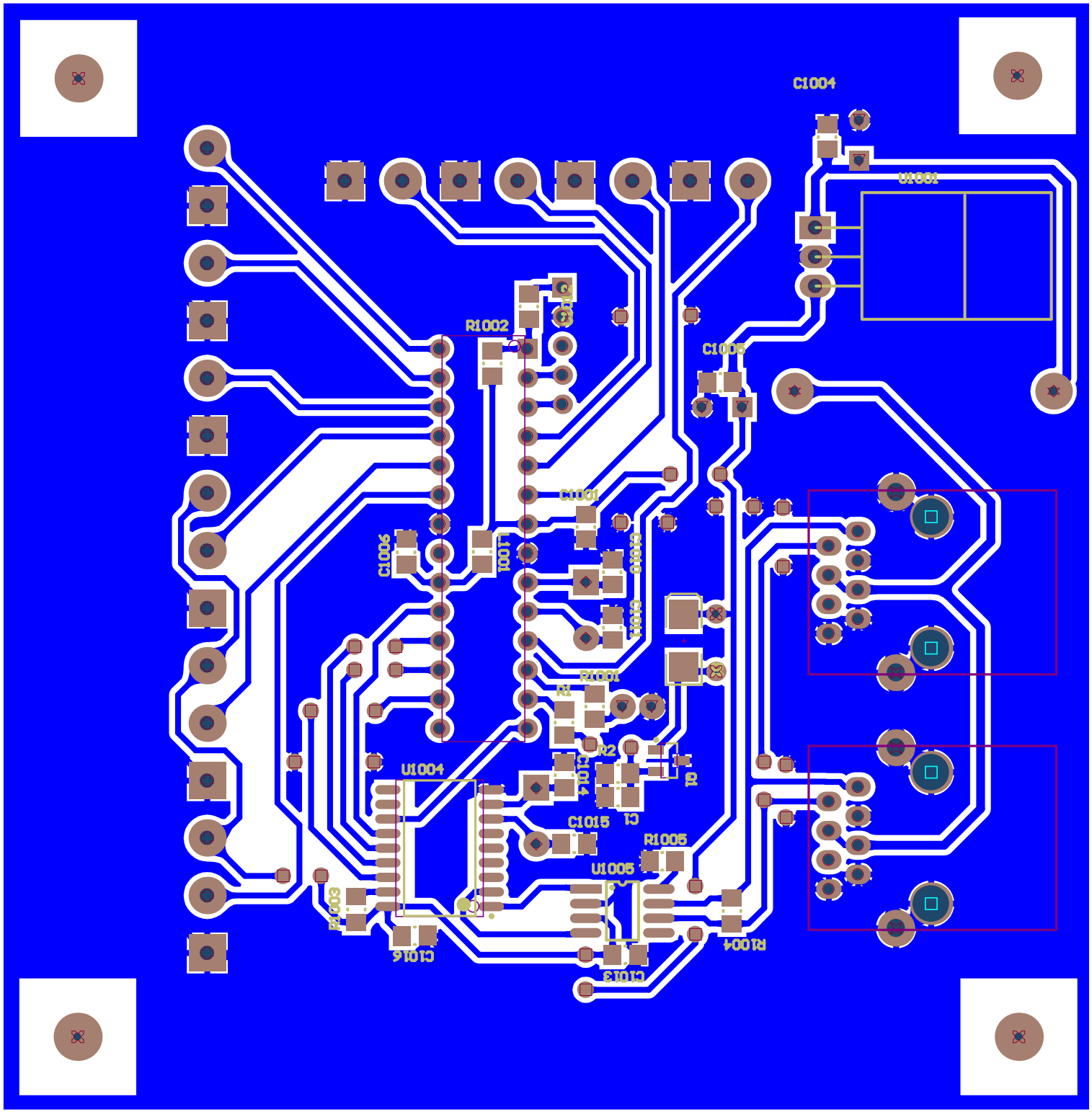
C1004
U1001
R1002
C1005
C1001
C1006
L1001
C1010
C1011
R1001
R1
R2
C1014
Q1
U1004
C1015
C1
R1005
U1005
R1003
C1016
C1013
R1004