Real Analysis: Change of Variables & Rigorous Foundations

The "Wall" of Multivariable Calculus

This segment serves as the bridge between computational calculus and rigorous Real Analysis. It actively shifts the mindset away from "memorizing integration formulas" and towards "understanding the geometric distortions of space via linear algebra (Jacobians)." The careful handling of domains and inverse mappings enforces the rigorous core of the discipline.

1.1 Reminder: The Setup for the Change of Variables

Spoken Protocol [00:00:11 - 00:01:29]

I hope you all had a great holiday and have recovered from the first half of the semester so we can continue with our work! Let me start by reminding you of what we did last time. In our previous lecture, we stated and began to prove what we playfully call the "final boss of integration": the Change of Variables formula. Let us review the setup.
As always, we begin with our domain $U \subset \mathbb{R}^n$. We apply a diffeomorphism—which we call Φ—that maps U to another domain V.

Domain Mapping and Function Definitions

Let $U, V \subset \mathbb{R}^n$. We define the mapping between these spaces:

$$U \xrightarrow[\text{diffeo}]{\Phi} V$$

Explanation of Steps: We establish a transformation Φ mapping a domain U to a codomain V. The orange annotation "diffeo" indicates this mapping is a *diffeomorphism*. A diffeomorphism is a heavily constrained, "well-behaved" mapping: it must be a bijection (one-to-one and onto), it must be differentiable everywhere, and its inverse Φ^{-1} must also be differentiable everywhere. This ensures the space is smoothly warped without tearing or folding.

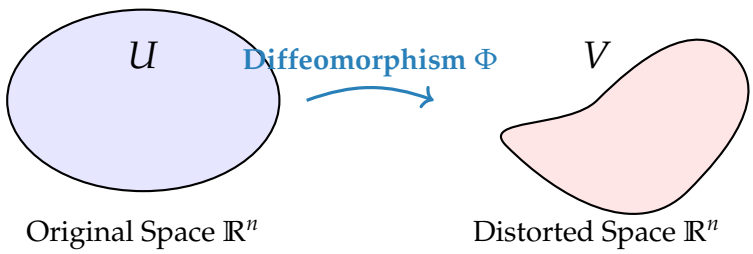

Spoken Protocol [00:01:29 - 00:02:45]

We then consider a Jordan measurable set $A \subset \mathbb{R}^n$, with the strict condition that its closure, $\overline{A}$, must be entirely contained within the domain U of our diffeomorphism. Next, we need a continuous function to integrate. We define a function f mapping from the closure $\overline{A}$ to the real numbers $\mathbb{R}$.

Defining the Integrand

We restrict our attention to a specific subset of U:

$$A \subset \mathbb{R}^n \text{ is Jordan measurable, such that } \overline{A} \subset U$$

We define our integrand function:

$$f : \overline{A} \to \mathbb{R} \quad \text{(continuous)}$$

Insight: Pedagogical Concept

Why the closure $\overline{A}$? By requiring the *closure* of A to be strictly contained within the open set U, we ensure that the boundary of A behaves nicely under the mapping Φ, and we avoid pathological singularities that could exist on the absolute edge of the domain U. We then ensure f is continuous over this closed, bounded region, guaranteeing Riemann integrability.

1.2 The Clunky Formulation of the Theorem

Spoken Protocol [00:02:45 - 00:03:50]

With this setup, the theorem states that the integral of $f(x)$ over the region A is equivalent to the integral evaluated over the mapped image, $\Phi(A)$. However, to calculate this, we must evaluate our function f at the pre-image, $\Phi^{-1}(y)$. Furthermore, the differential element dy must be corrected by the distortion of the volume, which is exactly the absolute value of the determinant of the Jacobian of Φ, evaluated at $\Phi^{-1}(y)$.

The Substitution Formula

$$\underbrace{\int_A f(x)\,dx}_{\text{Integral in Original Space}} = \int_{\Phi(A)} f(\underbrace{\Phi^{-1}(y)}_{\text{Pre-image under } \Phi}) \underbrace{\frac{1}{|\det J\Phi(\Phi^{-1}(y))|}}_{\text{Correction for Volume Distortion}} dy \tag{1.1}$$

Explanation of Steps: To evaluate the integral in the distorted space V (where the variable is y), every x in the original function must be replaced with the mapping that takes y back to x, which is $\Phi^{-1}(y)$. Because the transformation Φ stretches and squishes space, the resulting "volume pixels" (dy) are distorted. To preserve the total "mass" of the integral, we must divide by the scaling factor of that distortion. The scaling factor of a linear transformation is the determinant of its matrix—hence, we divide by the determinant of the Jacobian matrix of Φ.

Spoken Protocol [00:03:50 - 00:06:50]

I previously explained the geometric intuition behind why this theorem is true, but we didn't have time to complete the formal proof. I propose that we leave the proof for now. Instead, we will look at some concrete examples to see how we apply this theorem in actual calculations. Once you see it in action, you will understand why it is worth the effort to prove it. We will revisit the formal proof in two weeks during our revision buffer week.

1.3 Rewriting the Theorem via the Inverse Map

Spoken Protocol [00:06:50 - 00:08:20]

Let us rewrite this theorem into a format that is much easier to use in practice. Instead of constantly writing Φ^{-1} and dragging it through our equations, let us define a new mapping Ψ to be exactly equal to the inverse, Φ^{-1}.
If we substitute this into our theorem, the integration region $\Phi(A)$ remains, but the function evaluation $f(\Phi^{-1}(y))$ simply becomes $f(\Psi(y))$. But what happens to that clunky determinant in the denominator?

Simplifying the Notation

Let us define the inverse map explicitly:

$$\Psi = \Phi^{-1}$$

Substituting this directly into Equation 1.1, we get an intermediate step:

$$\int_A f(x)\,dx = \int_{\Phi(A)} f(\Psi(y)) \frac{1}{|\det J\Phi(\Psi(y))|}\,dy$$

Spoken Protocol [00:08:20 - 00:10:45]

Remember the lemma we proved regarding the differential of an inverse function. If we compose Φ with its inverse Ψ, we get the identity map.
By applying the chain rule, the differential of this composition evaluated at a point y is the differential of Φ multiplied by the differential of Ψ. Because the differential of the identity map is just the identity matrix, this means that the Jacobian matrix of Φ multiplied by the Jacobian matrix of Ψ equals the unit (identity) matrix.
Because the determinant is a multiplicative property for matrices, the determinant of one matrix must be the exact inverse (reciprocal) of the other. Therefore, instead of dividing by the determinant of $J\Phi$, we can simply multiply by the determinant of $J\Psi$!

Jacobian Reciprocal Derivation

$$\underbrace{\Phi \circ \Psi = \mathrm{id}}_{\text{Function Composition}} \implies \underbrace{D\Phi_{\Psi(y)} \circ D\Psi_y = \mathrm{id}}_{\text{Taking the Differential (Chain Rule)}}$$

$$\implies \underbrace{J\Phi(\Psi(y))}_{\text{Matrix 1}} \cdot \underbrace{J\Psi(y)}_{\text{Matrix 2}} = \underbrace{I_n}_{\text{Identity Matrix}}$$

Explanation of Steps: The chain rule in multivariable calculus dictates that the derivative of a composition of functions is the matrix product of their Jacobian matrices. Since the composition yields the identity function ($y \mapsto y$), the product of their Jacobians must yield the identity matrix I_n.

Taking the determinant of both sides, and using the property that $\det(AB) = \det(A)\det(B)$ and $\det(I_n) = 1$:

$$\det\Big(J\Phi(\Psi(y)) \cdot J\Psi(y)\Big) = \det(I_n)$$

$$\det(J\Phi(\Psi(y))) \cdot \det(J\Psi(y)) = 1$$

$$\implies \underbrace{\frac{1}{\det J\Phi(\Psi(y))}}_{\text{Clunky Denominator}} = \underbrace{\det J\Psi(y)}_{\text{Clean Numerator}}$$

Insight: The Power of Linear Algebra

This demonstrates how beautifully linear algebra serves calculus. The geometric reality that "stretching space forward by factor k, then pulling it backward, returns it to normal" is flawlessly encoded in the algebraic fact that the determinants of inverse matrices multiply to 1.

Spoken Protocol [00:10:45 - 00:12:15]

This gives us a highly practical, informal way to remember the substitution rule. Just like in Analysis 1, when you substitute $x = \Psi(y)$, you must replace the differential. But instead of replacing dx with the 1D derivative $\Psi'(y)\,dy$, you replace it with the absolute determinant of the Jacobian matrix, $|\det J\Psi(y)|\,dy$.

Highlighted Board Formula

Theorem 1 (The Practical Substitution Rule)**.** *When substituting $x = \Psi(y)$, the differential transforms as:*

$$\underbrace{dx}_{\textit{Original Volume}} = \underbrace{|\det J\Psi(y)|}_{\textit{Scaling Factor}} \underbrace{dy}_{\textit{New Volume}}$$

Yielding the clean theorem:

$$\int_A f(x)\,dx = \int_{\Phi(A)} f(\Psi(y))\,|\det J\Psi(y)|\,dy$$

1.4 Example: Area of a Unit Disk & The Definition of π

Spoken Protocol [00:12:15 - 00:15:00]

Let us compute a concrete example. But before we do, I must ask you: how was the constant π officially defined in your Analysis 1 course?
(A student answers correctly: "It is defined as the unique number in the open interval $(0, 4)$ such that the sine of π is zero.")
Exactly! You know many things about π from geometry, but your official, rigorous definition is that π is the first positive root of the sine function.
The sine and cosine functions themselves are defined purely analytically (usually via power series), and their defining properties are that the derivative of sine is cosine, the derivative of cosine is negative sine, $\sin(0) = 0$, and $\cos(0) = 1$. Those relations are definitive.

Analytical Definitions of Trigonometric Functions

The trigonometric functions are defined purely by their analytical properties (not triangles):

$$\sin'(x) = \cos(x) \tag{1.2}$$
$$\cos'(x) = -\sin(x) \tag{1.3}$$
$$\sin^2(x) + \cos^2(x) = 1 \tag{1.4}$$

The constant π is defined analytically as the unique root:

$$\sin(\pi) = 0 \quad \text{(for the first positive root)}$$

Explanation of Steps: By establishing these purely algebraic definitions, we ensure that when computing the integral of a disk and getting the symbol π, we are arriving at it through rigorous calculus and limits, not by relying on a high-school geometric formula ($A = \pi r^2$) which assumes the conclusion we are trying to prove.

Insight: Avoiding Circular Logic

This is a brilliant teaching moment. It is very easy to take geometry for granted. Forcing the recall that π is strictly "the root of a specific power series" elevates the upcoming Change of Variables computation from a standard geometry problem into a profound demonstration of analytical power.

1.4 Computing the Area of a Unit Disk

Spoken Protocol [00:15:00 - 00:18:37]

Now that we have established the rigorous analytical definition of π, we will prove—perhaps for the first time in your mathematical lives—that the area of the unit disk is exactly π.
In our rigorous language, we are asking for the 2-dimensional Jordan measure of the set B_1, which is the set of all points (x_1, x_2) such that $x_1^2 + x_2^2 \leq 1$. To compute this measure, we will use polar coordinates.
Let the first parameter y_1 represent the radius, and the second parameter y_2 represent the angle. We define our coordinate mapping Ψ such that $x_1 = y_1 \cos(y_2)$ and $x_2 = y_1 \sin(y_2)$. Our parameter domain D will be the open rectangle where the radius y_1 goes from 0 to 1, and the angle y_2 goes from 0 to 2π.

Setting up the Transformation

The professor writes down the set definition for the disk and formally defines the polar mapping Ψ alongside its parameter domain D.

Formalizing the Polar Transformation

The Unit Disk in the original coordinates:

$$B_1 = \{(x_1, x_2) \in \mathbb{R}^2 \mid x_1^2 + x_2^2 \leq 1\}$$

The Polar Coordinate Mapping Ψ:

$$\begin{aligned} x_1 &= y_1 \cos(y_2) \\ x_2 &= y_1 \sin(y_2) \end{aligned}$$

The Parameter Domain D:

$$D = \underbrace{(0,1)}_{\text{Radius } y_1} \times \underbrace{(0,2\pi)}_{\text{Angle } y_2} \implies \Psi : D \to B_1$$

Explanation of Steps: We are transitioning from Cartesian coordinates (x_1, x_2) to polar coordinates (y_1, y_2). The domain D is strictly an *open* rectangle. This strict open boundary guarantees that Ψ remains a proper diffeomorphism (bijective and smooth), as including $y_1 = 0$ (the origin) or $y_2 = 0, 2\pi$ (the overlapping seam) would break the bijection.

Spoken Protocol [00:18:37 - 00:20:17]

Our first crucial observation is that the image of our parameter domain, $\Psi(D)$, is not entirely equal to the closed disk B_1. Because we are using the open interval $(0, 1)$ for the radius and $(0, 2\pi)$ for the angle, our mapping completely misses the origin and the line segment lying on the positive x-axis.
However, we can easily prove that this missing 1-dimensional line segment has a 2-dimensional Jordan measure of zero. If you cover it with small squares of side length ϵ, the total area goes to zero. Therefore, even though the sets are not identical, their

measures are perfectly equal: $\mu_2(B_1) = \mu_2(\Psi(D))$.

Insight: The "Measure Zero" Safety Net

This is a critical Real Analysis concept. The fact that a mapping isn't perfectly surjective over the boundaries introduces the "cheat code" of integration: integrals do not "see" sets of measure zero. Boundaries, seams, and single points can be freely deleted without changing the overall volume.

TikZ: The Measure Zero Boundary Issue

The professor draws the mapping, actively highlighting the "missing" seam on the right side of the circle.

The Measure Zero Boundary Issue

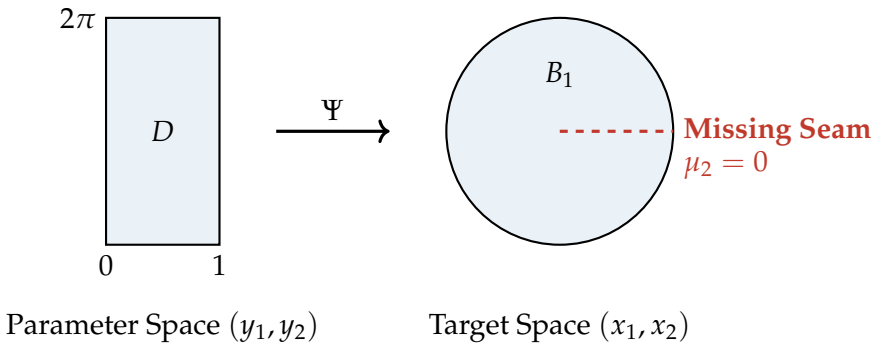

Spoken Protocol [00:20:17 - 00:22:55]

Because the measures are equal, we can apply our Change of Variables substitution rule. The area of the disk is the integral of the constant function 1 over our domain D, multiplied by the determinant of the Jacobian matrix of Ψ.
Let us compute this Jacobian matrix. Taking the partial derivatives with respect to y_1 and y_2, we construct our 2×2 matrix. When we compute the determinant, we get $y_1 \cos^2(y_2) + y_1 \sin^2(y_2)$. Factoring out the y_1, we use our analytical axiom that $\cos^2 + \sin^2 = 1$ (i.e., $y_1(\cos^2(y_2) + \sin^2(y_2)) = y_1$). The determinant is simply y_1. Because y_1 is strictly positive on our domain, its absolute value is just y_1 (i.e., $|\det J\Psi| = y_1$).

Calculating the Jacobian Determinant

Applying the Substitution Rule:

$$\mu_2(B_1) = \int_{\Psi(D)} 1\, dx = \int_D 1 \cdot \underbrace{|\det J\Psi(y_1, y_2)|}_{\text{Distortion Factor}}\, dy$$

Computing the Jacobian Matrix:

$$J\Psi(y_1, y_2) = \begin{pmatrix} \frac{\partial x_1}{\partial y_1} & \frac{\partial x_1}{\partial y_2} \\ \frac{\partial x_2}{\partial y_1} & \frac{\partial x_2}{\partial y_2} \end{pmatrix} = \begin{pmatrix} \cos(y_2) & -y_1 \sin(y_2) \\ \sin(y_2) & y_1 \cos(y_2) \end{pmatrix}$$

Evaluating the Determinant:

$$\begin{aligned}\det J\Psi &= \big(\cos(y_2)\cdot y_1\cos(y_2)\big) - \big(-y_1\sin(y_2)\cdot\sin(y_2)\big)\\ &= y_1\cos^2(y_2) + y_1\sin^2(y_2)\\ &= y_1\underbrace{\big(\cos^2(y_2)+\sin^2(y_2)\big)}_{=1\text{ (Pythagorean identity)}}\\ &= y_1\end{aligned}$$

Explanation of Steps: The Jacobian determinant tells us exactly how much a tiny square of parameter space $dy_1 dy_2$ is stretched when it is mapped into the disk. Because the determinant is y_1, it means the "stretching" scales linearly with the radius. Grids near the outer edge of the circle are stretched much larger than grids near the origin.

Spoken Protocol [00:22:55 - 00:26:33]

Substituting this back in, we must compute the double integral of y_1 over our rectangular domain D (i.e., $\int_D y_1\,dy$). But we have a problem: we haven't learned how to systematically compute multivariable integrals yet!
We can solve this using a geometric trick. The integral of a positive function over a 2D domain represents the 3-dimensional volume of its *hypograph*—the physical region trapped underneath the function's surface.
Let's add a vertical coordinate, x_3. We want the volume where $x_3 \le y_1$, over our base rectangle $(0,1)\times(0,2\pi)$. Consider a full 3D bounding box with dimensions $1\times 2\pi\times 1$. The total volume is 2π. Our function, $x_3 = y_1$, forms a slanted plane that cuts this box perfectly in half along its diagonal. Therefore, the volume of our hypograph is exactly half the volume of the box, which gives us π (i.e., $\frac{1}{2}(1\cdot 2\pi\cdot 1) = \pi$).

The Hypograph Wedge

The professor draws a 3D bounding box and shows how the function $f(y_1,y_2) = y_1$ cuts it precisely in half.

Evaluating the Volume via Geometry

$$\mu_2(B_1) = \int_{(0,1)\times(0,2\pi)} \underbrace{y_1}_{\text{Height } x_3}\ \underbrace{dy_1\,dy_2}_{\text{Base Area}} \tag{1.5}$$

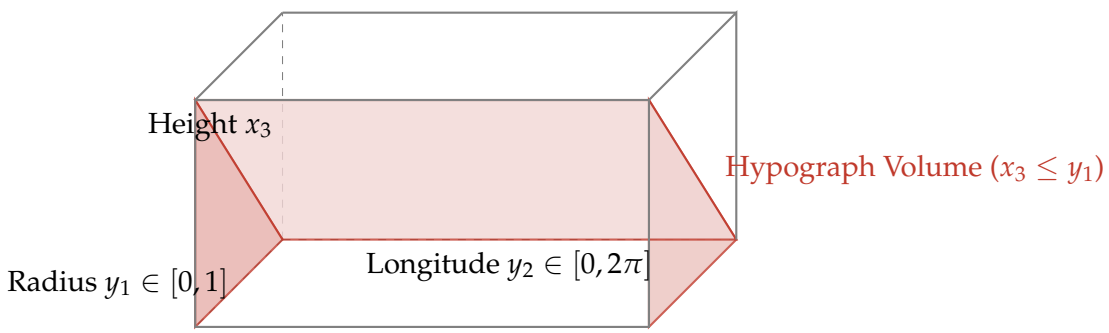

Explanation of Steps: By interpreting the integral physically, we see the function y_1 creates a wedge. Because the wedge is a perfect diagonal bisection of a rectangular

prism, we can compute its volume using simple geometry instead of advanced integration rules.

$$\mu_2(B_1) = \frac{1}{2}\,\text{Vol}(\text{Bounding Box}) = \frac{1}{2}(1 \cdot 2\pi \cdot 1) = \pi$$

1.5 Example: Volume of the Unit Ball in $\mathbb{R}^3$

Spoken Protocol [00:26:33 - 00:32:00]

That trick is wonderful, but let us move to a harder question. Let's compute the volume of the unit ball in $\mathbb{R}^3$. We know from geometry that the answer should be $\frac{4}{3}\pi$, but we have not proved it analytically yet.
We will try the exact same approach using 3D polar coordinates—spherical coordinates. We like spherical coordinates because they flawlessly transform rectangular boxes into spheres. Let our mapping be $\Psi(y_1, y_2, y_3)$.
The first coordinate, y_1, is always the radius. The second coordinate, y_2, is the longitude—the deviation from a fixed meridian. The third coordinate, y_3, represents the elevation. Let me write the formulas down...

The Coordinate Convention Trap

The professor writes the spherical coordinates. He intends for y_3 to be the "elevation" (latitude, measured from the equator). However, he writes the standard physics convention where the angle is measured from the North Pole (colatitude). This is mathematically incorrect for his stated domain.

The Initial Incorrect Formulation

$$\begin{aligned} x_1 &= y_1 \cos(y_2) \sin(y_3) \\ x_2 &= y_1 \sin(y_2) \sin(y_3) \\ x_3 &= y_1 \cos(y_3) \end{aligned} \tag{1.6}$$

Insight: The Coordinate Trap

There are two competing standards for spherical coordinates. Mathematics often uses latitude (angle from the equator, meaning $z = r \sin\phi$). Physics usually uses colatitude (angle from the North Pole, meaning $z = r\cos\phi$). Mixing the words of one convention with the math of the other inadvertently creates a phenomenal active-learning moment for the room.

Spoken Protocol [00:32:00 - 00:32:53]

Wait, looking at this... did I make a mistake?

Student Spotting the Error

"If we would like y_3 to represent the elevation from the equator, shouldn't we switch the sine and

cosine in the formula for the polar coordinates?"

Spoken Protocol [continued]

Ah! The y_3 is the elevation, right? Yes, you are completely right. If we use the cosine for the x_3 coordinate, we are measuring the deviation from the North Pole. If we want the elevation from the equator, the vertical x_3 coordinate must be governed by the sine function. Let me fix this on the board. The x_3 gets the sine, and the others get the cosine. Excellent catch.

Correcting the Spherical Coordinates

The professor erases the sines and cosines and formally swaps them.

The Corrected Spherical Coordinates

The mapping $\Psi : D \to \mathbb{R}^3$ for elevation-based spherical coordinates:

$$\begin{aligned} x_1 &= y_1 \cos(y_2) \underbrace{\cos(y_3)}_{\text{Corrected}} \\ x_2 &= y_1 \sin(y_2) \underbrace{\cos(y_3)}_{\text{Corrected}} \\ x_3 &= y_1 \underbrace{\sin(y_3)}_{\text{Corrected}} \end{aligned} \tag{1.7}$$

Explanation of Steps: By setting $x_3 = y_1 \sin(y_3)$, we ensure that when the elevation angle $y_3 = 0$, our height x_3 is 0 (putting us on the equator). When $y_3 = \pi/2$, $\sin(\pi/2) = 1$, putting us exactly at the North Pole $x_3 = y_1$.
The parameter domain D is formally defined as:

$$D = \underbrace{(0,1)}_{y_1(\text{Radius})} \times \underbrace{(0,2\pi)}_{y_2(\text{Longitude})} \times \underbrace{\left(-\frac{\pi}{2}, \frac{\pi}{2}\right)}_{y_3(\text{Elevation})}$$

Spherical Coordinates Visualized

Visual representation of the corrected coordinate system, explicitly showing y_3 sweeping up from the equatorial plane.

Spherical Coordinates Visualized

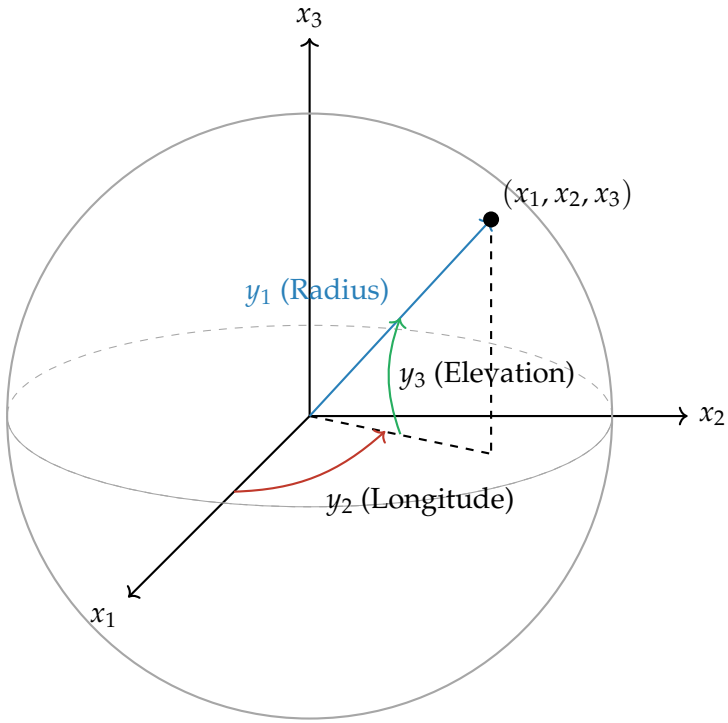
x_3
(x_1, x_2, x_3)
y_1 (Radius)
y_3 (Elevation)
x_2
y_2 (Longitude)
x_1

1.5 Completing the 3D Unit Ball Setup

Spoken Protocol [00:32:53 - 00:36:10]

Now that we have the correct spherical coordinates defined, we need the Jacobian determinant. I am not going to spend seven minutes on the board computing this 3×3 matrix, but I highly encourage you to do it at home. Because of the trigonometric identity $\sin^2(\theta) + \cos^2(\theta) = 1$, many terms simplify beautifully.
In the end, the determinant of the Jacobian evaluates to $y_1^2 \cos(y_3)$. Notice that because our elevation angle y_3 goes strictly from $-\pi/2$ to $\pi/2$, the cosine function is always positive. Therefore, the absolute value of the determinant is simply $y_1^2 \cos(y_3)$ itself.
Using our Change of Variables formula, the volume of the unit ball in $\mathbb{R}^3$ is equal to the integral over our rectangular parameter domain D.

Finalizing the 3D Integral

The professor writes the final Jacobian determinant and constructs the triple integral on the board.

Computing the 3D Volume Integral

The Jacobian determinant simplifies to:

$$\det J\Psi = y_1^2 \cos(y_3)$$

Because $y_3 \in (-\pi/2, \pi/2)$, $\cos(y_3) > 0$. Applying the substitution rule:

$$\mu_3(B_1) = \int_D \underbrace{y_1^2 \cos(y_3)}_{\text{Distortion Factor}} \, dy = \int_0^1 \int_0^{2\pi} \int_{-\pi/2}^{\pi/2} y_1^2 \cos(y_3) \, dy_3 \, dy_2 \, dy_1 \tag{1.8}$$

Spoken Protocol [00:36:10 - 00:40:07]

Now, you might ask me: "How do we do a geometric trick to compute this, like we did with the 2D wedge?" The answer is, we don't. I know of no simple geometric trick to evaluate this 4-dimensional hyper-volume.
While we could try to invent more sophisticated coordinate changes, we will instead approach this integral systematically. To compute integrals of this type effortlessly, we must introduce the slicing idea. We will establish Cavalieri's Principle, which leads directly to Fubini's Theorem.

1.6 The Slicing Idea: Cavalieri's Principle

Spoken Protocol [00:40:07 - 00:42:00]

Let me motivate the slicing idea informally. The Cavalieri Principle states that if you have a 3D body—which for us will be a Jordan measurable set—you can compute its total volume by slicing it.
Imagine a potato. If you take a potato and cut a very thin vertical slice, that slice is almost perfectly uniform from its front face to its back face. You can approximate the volume of that single slice by multiplying its cross-sectional area by its tiny thickness.

If you sum the volumes of all these slices, the total volume of the potato is perfectly preserved.

The Potato Analogy

The professor draws a 3D blob (a potato) and highlights a single, thin vertical slice to illustrate the concept of $V \approx \sum A(x)\Delta x$.

Geometric Visualization: Slicing a Volume

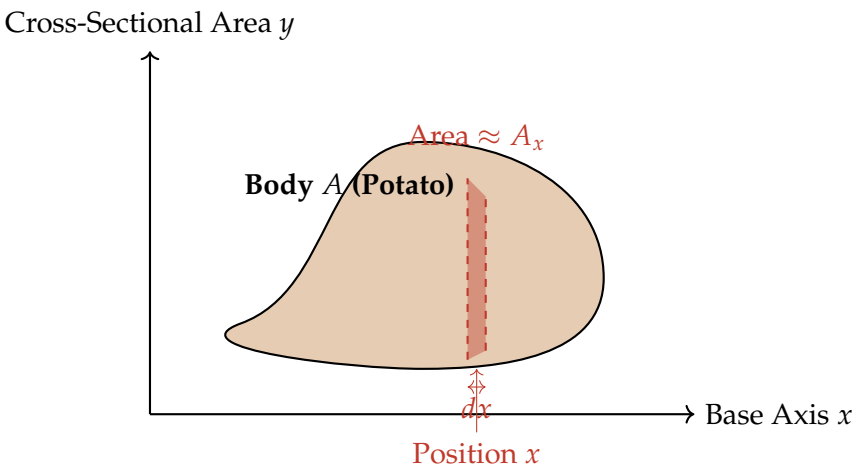

Spoken Protocol [00:42:00 - 00:46:30]

How do we do this systematically? We state it in terms of Jordan measures. We split our n-dimensional space, $\mathbb{R}^n$, into a product space: $\mathbb{R}^k \times \mathbb{R}^{n-k}$. Let the base coordinates be x and the vertical coordinates be y.
Let $A \subset \mathbb{R}^n$ be a Jordan measurable set. For a specific base point x, we define the slice A_x as the set of all vertical points y that lie inside A.
Here is the technical hurdle: Just because A is Jordan measurable in $\mathbb{R}^n$ does not guarantee that the slice A_x is Jordan measurable in the lower-dimensional space $\mathbb{R}^{n-k}$. But we don't care! The outer measure and inner measure are *always* well-defined for any bounded set. So, we define the upper marginal density $\overline{\Phi}(x)$ using the outer measure, and the lower marginal density $\underline{\Phi}(x)$ using the inner measure.

Formalizing the Slices

The professor writes down the formal set notation for slices and explicitly addresses the "non-measurable slice" edge case using inner/outer measures.

Formal Notation of Slices

Split the space: $\mathbb{R}^n = \mathbb{R}^k \times \mathbb{R}^{n-k}$. A point is (x, y). Let $A \subset \mathbb{R}^n$ be Jordan measurable.

Highlighted Board Formula

Definition 1 (Slices)**.** For a fixed base coordinate $x \in \mathbb{R}^k$, the slice A_x is defined as:

$$A_x = \{y \in \mathbb{R}^{n-k} \mid (x, y) \in A\}$$

Marginal Densities

To bypass slices that are not Jordan measurable, we define the **marginal densities**:

$$\overline{\varphi}(x) = \mu_{n-k}^{\text{out}}(A_x) \quad \text{(Upper Marginal)}$$
$$\underline{\varphi}(x) = \mu_{n-k}^{\text{in}}(A_x) \quad \text{(Lower Marginal)}$$

Highlighted Board Formula

Theorem 2 (Cavalieri's Principle)**.** *For a Jordan measurable set $A \subset \mathbb{R}^n \equiv \mathbb{R}^k \times \mathbb{R}^{n-k}$, both marginal functions are Riemann integrable over the base space $\mathbb{R}^k$. Their integrals perfectly yield the total n-dimensional volume of A:*

$$\int_{\mathbb{R}^k} \overline{\varphi}(x)\, dx = \int_{\mathbb{R}^k} \underline{\varphi}(x)\, dx = \mu_n(A)$$

Insight: The "I Don't Care" Philosophy

The colloquial "I don't care" regarding slices that are not Jordan measurable imparts profound mathematical wisdom. In integration, sets of measure zero or pathological boundary anomalies disappear when summed over. The upper and lower integrals act as a squeeze theorem—even if individual slices are "fuzzy," integrating over the entire domain squeezes that fuzziness down to zero.

1.7 Proof by Counting Pixels

Spoken Protocol [00:46:30 - 00:52:00]

How do we prove this? Because A is Jordan measurable, we can approximate it using a very small grid of dyadic cubes—like pixels on a screen.
For any $\epsilon > 0$, we can find an inner approximation F (made entirely of yellow pixels inside A) and an outer approximation G (made of red pixels covering A), such that the volume difference between G and F is less than ϵ.
Because these sets are built from perfect cubes aligned to a grid, what happens when we slice them? As long as our base point x stays within the same column of the grid, the slice of F or G cannot change! Therefore, the measures of these slices, $\mu(F_x)$ and $\mu(G_x)$, are just dyadic step functions.

The Dyadic Pixel Proof

The professor illustrates the inner (F) and outer (G) approximations. He notes that integrating a dyadic step function is just combinatorics—counting the total number of pixels.

Dyadic Pixel Approximation

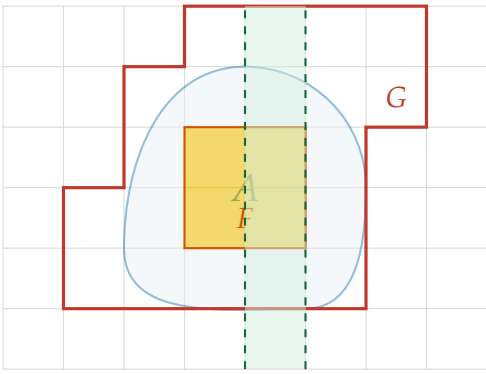

Slice Column x

Explanation of Steps: 1. A is sandwiched: $F \subset A \subset G$. 2. This forces the slices to be sandwiched: $F_x \subset A_x \subset G_x$. 3. Taking the measure of the slices:

$$\mu(F_x) \leq \underline{\varphi}(x) \leq \overline{\varphi}(x) \leq \mu(G_x)$$

4. Integrating the step functions $\mu(F_x)$ and $\mu(G_x)$ over the base dx simply counts the total number of pixels in F and G. Thus:

$$\mathrm{Vol}(F) \leq \int \underline{\varphi}(x)dx \leq \int \overline{\varphi}(x)dx \leq \mathrm{Vol}(G)$$

5. Since we chose our grid such that $\mathrm{Vol}(G) - \mathrm{Vol}(F) < \epsilon$, as $\epsilon \to 0$, the outer and inner pixel volumes squeeze the marginal integrals perfectly to $\mathrm{Vol}(A)$.

1.8 Fubini's Theorem: Cavalieri for Functions

Spoken Protocol [End of Lecture Segment]

Fubini's theorem is the immediate consequence of Cavalieri's Principle applied to functions instead of just shapes.
If you have a function $f(x, y)$ that is Riemann integrable over A, you can compute the total multi-dimensional integral by integrating over the slices first. You integrate over y for a fixed x, and then you sum those results over all x.
The proof is identical. In fact, remember that the integral of a function is just the volume of its hypograph! Fubini's Theorem is quite literally just Cavalieri's Principle applied to the $n + 1$ dimensional hypograph wedge of the function.

Highlighted Board Formula

Theorem 3 (Fubini's Theorem (Informal))**.** *Let $A \subset \mathbb{R}^k \times \mathbb{R}^{n-k}$ be a Jordan measurable set, and let $f(x,y)$ be Riemann integrable over A. The multiple integral can be evaluated by integrating over the vertical slices A_x first, and then over the base coordinates x:*

$$\int_A f(x,y)\, d(x,y) = \int_{\mathbb{R}^k} \left(\int_{A_x} f(x,y)\, dy \right) dx$$

Insight: The Grand Finale

The entire lecture culminates here. The 2D disk trick (where the function $x_3 = y_1$ created a wedge) was a manual, geometric application of Fubini's theorem! Using a visual trick to solve the integral before proving the theorem that justifies it beautifully completes the pedagogical loop.

1.9 Monday, April 15th: Second Half of the Lecture Cavalieri's Principle: Statement and Proof via Dyadic Cubes

AI Extraction Protocol
Segment: 00:00 – 15:15

1.9.1 Geometric Setup of Cavalieri's Principle

Spoken Protocol [00:00:08 - 00:02:20]

Let me continue with the statement. We are trying to formalize this theorem that I informally described as "cutting the potato." But now we are trying to be more serious, and I will introduce the proper notations.
This theorem, you will see, is a bit the opposite of the Change of Variables. It is a very simple statement, but it has a very hard proof. The setup involves very complicated statements, but the proof itself is actually very easy, right?
Let me do a drawing of the measure space. We have our set A, right, that is contained in a box. Here we will put the X-axis and the Y-axis. The X-axis actually represents $\mathbb{R}^k$, and the Y-axis represents $\mathbb{R}^{n-k}$. The whole space is $\mathbb{R}^n$, which is the product of the two. Okay, now we are saying that our set is contained in some bounding box. It is a very large box, going from $-c$ to c. Now, let's look inside this box. If we pick some point x here on the X-axis, I will consider the slice. The relevant piece of the set is this vertical slice over here, right? This is what I am calling A_x. The set A_x will be the projection of this slice onto the vertical axis.

Geometric Visualization Setup

The professor draws the bounding box and the sets A and A_x to geometrically define the slicing operation.

Geometric Visualization Setup

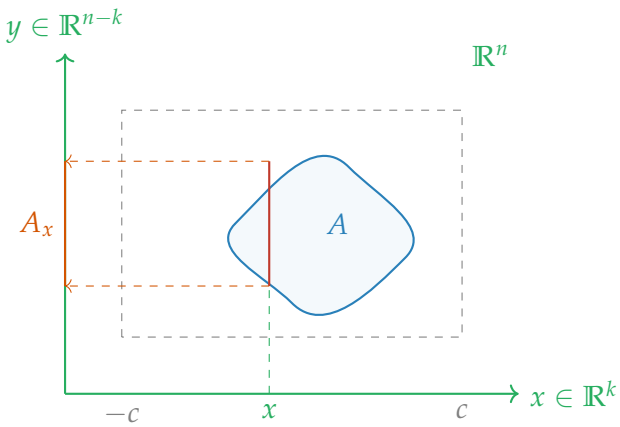

Spoken Protocol [00:02:20 - 00:04:50]

So, you take this set, and you project what? You take the y-coordinates. Given the x, you take the y-coordinates of the pairs (x, y) that belong to A. Since x is fixed, what you are looking at is: you go to x, you look at which y-coordinates you have inside the set,

and this is the set A_x.
Now, this set here is very nice because in the drawing it is just a 1D interval, right? But we might be in very high dimensions. So A_x is just a subset of $\mathbb{R}^{n-k}$ a priori, and it is a bounded set. We know that it is strictly contained within $(-c, c)^{n-k}$.
Because we know the entire set A is Jordan measurable, we might hope the slice is too. But maybe for some pathological slices, the set is not measurable because the outer and inner measures do not coincide. However, we can surely consider the marginals! We can always measure the outer measure $\mu_{n-k,\text{out}}$ and the inner measure $\mu_{n-k,\text{in}}$.
The measure from the inside and the outside of the set is always well-defined, and this defines the functions $\overline{\varphi}(x)$ and $\underline{\varphi}(x)$, right? So, this is the setup.

Formal Definition of the Slice and Marginals

Let $\mathbb{R}^n = \mathbb{R}^k \times \mathbb{R}^{n-k}$, with coordinates $(x, y) \in \mathbb{R}^n$.
Let $A \subset \mathbb{R}^n$ be Jordan measurable, with $A \subset (-c, c)^n$.
Define the slices: for $x \in (-c, c)^k$,

$$A_x = \{y \in \mathbb{R}^{n-k} \mid (x, y) \in A\} \subset (-c, c)^{n-k}$$

We define the upper and lower marginal densities $\overline{\varphi}, \underline{\varphi} : [-c, c]^k \to \mathbb{R}$ as:

$$\overline{\varphi}(x) = \mu_{n-k}^{\text{out}}(A_x)$$
$$\underline{\varphi}(x) = \mu_{n-k}^{\text{in}}(A_x)$$

Explanation of Steps: Even if a solid body A is perfectly measurable, a specific 1D slice could theoretically intersect a fractal boundary or a cloud of points, making that exact slice non-measurable. To bypass this entirely, the marginals are rigorously defined using the universally safe inner and outer measures.

1.10 The Theorem Statement

Spoken Protocol [00:04:50 - 00:07:30]

And the theorem says that under these assumptions, both functions $\overline{\varphi}$ and $\underline{\varphi}$ mapping from $[-c, c]^k \to \mathbb{R}$ are Riemann integrable.
And the integral of them over the set $[-c, c]^k$—the integral of $\underline{\varphi}(x)\,dx$ is equal to the integral of $\overline{\varphi}(x)\,dx$, and both are equal to the measure of A, $\mu_n(A)$.
So, this integral is just you summing up the $\overline{\varphi}$. The $\overline{\varphi}$ is the measure of each slice (i.e., $\mu_{n-k,\text{out}}(A_x)$)!

Student Question

Maybe for some slices this measure is not well-defined because the outer and the inner measure do not coincide!

Spoken Protocol [00:06:15 - 00:07:30]

Do not worry! Just put either the outer or the inner. I don't care, because when you integrate the outer, or the inner, or anything in between, you will always recover the exact measure of your set A.
Okay, let's prove that. To do the proof, I will do another drawing.

Highlighted Board Formula

Theorem 4 (Cavalieri's Principle)**.** *If $A \subset \mathbb{R}^n$ is Jordan measurable, then the marginal functions $\overline{\varphi}, \underline{\varphi} : [-c, c]^k \to \mathbb{R}$ are Riemann integrable, and:*

$$\int_{[-c,c]^k} \underline{\varphi}(x)\, dx = \int_{[-c,c]^k} \overline{\varphi}(x)\, dx = \mu_n(A)$$

1.11 The Proof Setup: Dyadic Cubes

Spoken Protocol [00:07:30 - 00:11:00]

Always when we want to prove something about Jordan measures, remember that we are approximating our set from the inside and the outside. We will take an approximation from the inside, right? I'm approximating from the inside, and then there will be the approximation from the outside.
Let me describe a bit with a picture of what we are going to do in the proof, and later we will do the symbols. Since our set is Jordan measurable, we can take a small pixel size of 2^{-p}. We can take an inner and an outer approximation over our set by dyadic cubes. So, by pixels! This is the inner, this is the outer.
The difference between these two is less than epsilon. We can make the volume of the red outer approximation minus the volume of the yellow inner approximation less than epsilon for whatever precision we want.
Now we will see what happens when we take a slice of this pixelated set. Let's say we take x and we slice, right? What we see is that the slice of A contains the slice of the yellow, which is contained in the slice of the red. And when you start to move x, whenever you move x less than the size of the pixel, you are not jumping to a new cube!

Geometric Proof Setup: Inner and Outer Approximations

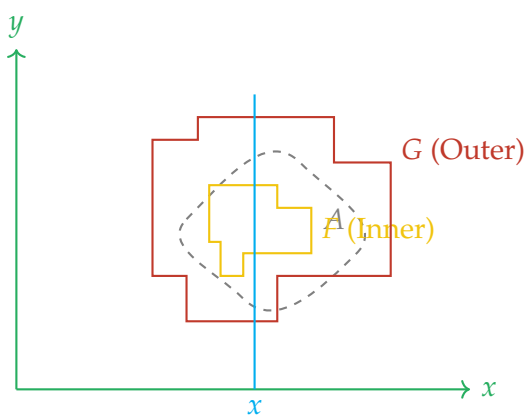

Spoken Protocol [00:11:00 - 00:15:15]

Because you are not jumping to a new cube, the marginal densities computed for the inner and outer approximations are dyadic step functions!
This is the key observation. They are dyadic step functions in x, and they will approximate the Riemann integral. The dyadic step functions are what we use to approximate the integral.
So, this is how we will try to proceed. Let's write this formally. The idea is that given a dyadic cube—I will take one of size 2^{-p} in $\mathbb{R}^n$. Let me call this $Q_p^n(z)$. So $Q_p^n(z) = z + 2^{-p}[0,1)^n$, right? Since there will be cubes of several dimensions, let me put the dimension here as an index n.
Now, if z is of the form (a, b) where $a \in \mathbb{R}^k$ and $b \in \mathbb{R}^{n-k}$—meaning in this splitting I take a z that has coordinates a and b—then this n-dimensional cube $Q_p^n(z)$ is equal to $Q_p^k(a) \times Q_p^{n-k}(b)$, right?
So, I am saying something very complicated to write, but very trivial geometrically. On the picture, I am saying that the n-dimensional cube over here is always the product of a base cube over here times the vertical cube over there!

Dyadic Cube Definitions

A dyadic cube of side length 2^{-p} in $\mathbb{R}^n$ anchored at z is defined as:

$$Q_p^n(z) = z + 2^{-p}[0,1)^n$$

If the anchor point splits across our axes such that $z = (a, b)$ where $a \in \mathbb{R}^k$ and $b \in \mathbb{R}^{n-k}$, then the n-dimensional cube factors across the dimensions:

$$Q_p^n(z) = Q_p^k(a) \times Q_p^{n-k}(b)$$

Where, generally for any dimension m:

$$Q_p^m(i) = i + 2^{-p}[0,1)^m \subset \mathbb{R}^m$$

Explanation of Steps: The geometric idea here is simple despite the rigorous notation. Imagine building a replica of the shape entirely out of LEGO bricks ("dyadic cubes"). If you slice this LEGO shape vertically at position x, the cross-section does not change at all as long as your slice stays within the width of that specific column of bricks. It only jumps to a new value when x crosses into the next column. This is why the marginal densities become *step functions*.
Mathematically, the formula $Q_p^n(z) = Q_p^k(a) \times Q_p^{n-k}(b)$ proves that an n-dimensional brick is constructed simply by taking a k-dimensional base square on the floor, and extruding it upwards along an $(n-k)$-dimensional vertical line. This factorization is what rigorously justifies isolating the variables to integrate them one dimension at a time.

Insight: Calculus via Combinatorics

By replacing the continuous, smooth curve with a grid of literal squares (dyadic cubes), the nasty continuous calculus problem drops away. As long as your x-coordinate stays within the width of a single vertical column of squares, the vertical slice does not change its length. It is piecewise constant. A terrifying integration problem becomes the simple

integration of a step function!

1.12 Cavalieri's Principle: Integration of Step Functions and The Squeeze

AI Extraction Protocol
Segment: 15:15 – 30:42

Segment Continuation

Continuing directly from the previous segment, the professor has just established that the n-dimensional set A can be approximated from the inside and the outside using a discrete grid of dyadic cubes ("pixels"). He now transitions to the algebraic formalization of these geometric bounds.

1.13 Formalizing the Approximations

Spoken Protocol [15:15 - 18:22]

Let us formalize these geometric bounds. Given any arbitrary precision $\varepsilon > 0$, we can choose a sufficiently fine pixel size—let us say, governed by some integer $p \in \mathbb{N}$ determining the side length 2^{-p}. By the very definition of Jordan measurability, there must exist an inner dyadic set F and an outer dyadic set G such that our set A is completely sandwiched between them.
Furthermore, we are guaranteed that the total volume of the large outer approximation minus the total volume of the small inner approximation is strictly less than ε (i.e., $\mu_n(G) - \mu_n(F) < \varepsilon$).
Now, let us examine the vertical cross-sections of these pixelated approximations. For any base coordinate x residing within our bounding box $[-c, c]^k$, we define the slice of the outer approximation, G_x, as the set of all vertical y-coordinates such that the composite point (x, y) belongs to G. We define the slice of the inner approximation, F_x, in the exact same manner. Recall that both F and G are simply finite unions of dyadic cubes of pixel size 2^{-p}.

Establishing Jordan Bounds

The professor moves to a clean section of the center board to begin the formal algebraic proof. He writes down the standard definition of a Jordan measurable set using the dyadic approximations F and G, followed by the set-builder notation for their respective vertical slices.

Inner and Outer Dyadic Sets and Slices

Given $\varepsilon > 0$, $\exists p \in \mathbb{N}$ and dyadic sets F, G (composed of cubes of side length 2^{-p}) such that:

$$F \subset A \subset G \quad \text{and} \quad \mu_n(G) - \mu_n(F) < \varepsilon$$

For all $x \in [-c, c]^k$, we define the vertical slices:

$$G_x = \{y \in \mathbb{R}^{n-k} \mid (x, y) \in G\}$$
$$F_x = \{y \in \mathbb{R}^{n-k} \mid (x, y) \in F\}$$

1.14 Pixels to Step Functions

Spoken Protocol [18:22 - 21:50]

Let us define a new function, $f(x)$, which represents the $(n-k)$-dimensional volume of the inner slice F_x. Similarly, let $g(x)$ represent the volume of the outer slice G_x.
Because these sets are constructed entirely from a uniform grid of dyadic cubes, the geometry of the vertical slice does not change continuously as you move x. As long as your coordinate x remains within the boundaries of a single base pixel $Q_p^k(a)$, the volume of the vertical slice intersecting it remains perfectly constant.
What does it mean for a function to be piecewise constant across a grid of cubes? It means that $f(x)$ and $g(x)$ are, by definition, dyadic step functions. Additionally, since our entire set is contained within the bounding box, these functions trivially evaluate to zero outside of $[-c, c]^k$. Consequently, we have successfully bounded our continuous problem with adequate step functions, which are exactly the tools we need to approximate the Riemann integral.

Insight: The Geometric Leap

This explicitly bridges the physical drawing of "pixels" to the algebraic definition of a step function. Because F is constructed purely of vertical columns of uniform width 2^{-p}, moving x horizontally within the boundary of a single column does not change the vertical cross-section F_x. Thus, the volume function $f(x)$ is perfectly flat (constant) across that entire base pixel.

Step Function Property

Define the slice volume functions $f, g : [-c, c]^k \to \mathbb{R}$ as:

$$f(x) := \mu_{n-k}(F_x)$$
$$g(x) := \mu_{n-k}(G_x)$$

Because F and G are finite unions of dyadic cubes, $f(x)$ and $g(x)$ are constant on every base cube $Q_p^k(a)$. Furthermore, $f(x) = g(x) = 0$ outside of $[-c, c]^k$.
$\implies$ f and g are **dyadic step functions**.

1.15 The Combinatorial Counting Argument

Spoken Protocol [21:50 - 25:30]

Now, let us integrate these step functions. What is the integral of $f(x)\,dx$ over our base space?
Because we are operating in the pixelated world of dyadic cubes, integrating the volume of the slices over the base domain degenerates into a simple counting argument! You are merely looking at each column and asking, "How many pixels are stacked here?" When you integrate, you are simply summing those discrete columns together to recover the total number of pixels in the entire shape.
There are no limits here, and no continuous approximation errors. It is pure combinatorics. Therefore, the integral of our inner step function $f(x)$ evaluates exactly to the

total n-dimensional volume of the inner approximation, $\mu_n(F)$. By identical reasoning, the integral of $g(x)$ evaluates exactly to $\mu_n(G)$.

Integrating the Step Functions

He writes the integral of $f(x)$ and $g(x)$ across the base space. He explicitly equates the integral over the base space to the total volumetric measure of the multi-dimensional approximation sets.

Combinatorial Integration

Because f and g are dyadic step functions, their Riemann integrals are precisely the sum of the volumes of their constituent n-dimensional cubes:

$$\int_{[-c,c]^k} f(x)\,dx = \mu_n(F)$$
$$\int_{[-c,c]^k} g(x)\,dx = \mu_n(G)$$

Insight: Calculus Becomes Counting

This is a beautiful pedagogical moment. Multi-dimensional integration is demystified by showing that when dealing with step functions constructed from a uniform grid, the Riemann integral becomes simple addition. Taking the volume of a 2D slice and multiplying it by the tiny 1D width of the base pixel (dx) yields the 3D volume of that column. Summing them all up gives the total volume.

1.16 The Chain of Inequalities

Spoken Protocol [25:30 - 27:30]

We now rely on our fundamental geometric inclusion. Because the inner approximation F is contained within A, which is in turn contained within G, this strict nesting applies to every single vertical slice. Thus, $F_x \subset A_x \subset G_x$.
This geometric nesting forces a strict ordering on the measures of these slices. The measure of the inner slice, $f(x)$, must be less than or equal to the inner measure of A_x, which is our lower marginal $\underline{\varphi}(x)$ (i.e., $f(x) \leq \underline{\varphi}(x)$). In turn, the outer measure of A_x, which is our upper marginal $\overline{\varphi}(x)$, must be less than or equal to the measure of the outer slice, $g(x)$ (i.e., $\overline{\varphi}(x) \leq g(x)$).
We have successfully constructed a chain of inequalities for our functions. A foundational property of Riemann integration is that if functions are strictly ordered, their integrals maintain that exact order. We will apply the lower Riemann integral to the lower marginal, and the upper Riemann integral to the upper marginal, preserving the entire inequality chain from end to end.

Establishing the Squeeze

The professor moves back to the center board. He uses the geometric inclusion to establish an ordered chain of marginal densities. He then applies the lower and upper

Riemann integrals to this chain, drawing a long series of inequalities.

Squeezing the Marginals

From the inclusion $F \subset A \subset G$, we have for all slices x:

$$F_x \subset A_x \subset G_x$$

Taking the respective measures preserves the ordering:

$$\underbrace{\mu_{n-k}(F_x)}_{f(x)} \leq \underbrace{\mu_{n-k,\text{in}}(A_x)}_{\underline{\varphi}(x)} \leq \underbrace{\mu_{n-k,\text{out}}(A_x)}_{\overline{\varphi}(x)} \leq \underbrace{\mu_{n-k}(G_x)}_{g(x)}$$

Integrating across $[-c, c]^k$ preserves the inequality chain:

$$\int f(x)\,dx \leq \underline{\int} \underline{\varphi}(x)\,dx \leq \overline{\int} \overline{\varphi}(x)\,dx \leq \int g(x)\,dx$$

1.17 Conclusion of the Proof

Spoken Protocol [27:30 - 30:42]

Let us substitute the combinatorial volumes we found earlier into the bounding ends of this inequality. We know that the integral of $f(x)$ is exactly $\mu_n(F)$, and the integral of $g(x)$ is exactly $\mu_n(G)$.

Therefore, our unknown marginal integrals are permanently trapped between the volume of the inner approximation and the volume of the outer approximation. But remember our initial premise! We constructed our pixels specifically such that the difference between the large outer volume and the small inner volume is strictly less than ε.

What happens as we send ε to zero? The outer and inner bounds squeeze tightly together. Because the marginal integrals are trapped in the middle, and because they are entirely independent of our arbitrary choice of ε, they are forced to equal the exact same value.

This simultaneously proves two things: first, because the lower and upper integrals coincide, the marginal functions are definitively Riemann integrable. Second, because they are squeezed between bounds that converge to the true volume of the shape, their integral evaluates exactly to $\mu_n(A)$. And that completes the proof of Cavalieri's Principle.

Substituting and Concluding

He substitutes $\mu_n(F)$ and $\mu_n(G)$ into the bounding ends of the integral inequality chain. He circles the ε condition, shows the bounds collapsing, and writes the final conclusion, boxing the result.

The Final Inequality Chain

Substituting the known combinatorial integrals:

$$\mu_n(F) \leq \underline{\int} \underline{\varphi}(x)\, dx \leq \overline{\int} \overline{\varphi}(x)\, dx \leq \mu_n(G)$$

We know by our initial choice of dyadic approximations that:

$$\mu_n(G) - \mu_n(F) < \varepsilon$$

Highlighted Board Formula

Theorem 5 (Conclusion of Cavalieri's Principle)**.** *Since the upper and lower integrals of the marginal functions are squeezed between $\mu_n(F)$ and $\mu_n(G)$ for any $\varepsilon > 0$, and the length of that interval vanishes as $\varepsilon \to 0$, we conclude:*

$$\int_{[-c,c]^k} \underline{\varphi}(x)\, dx = \int_{[-c,c]^k} \overline{\varphi}(x)\, dx = \mu_n(A)$$

Therefore, $\underline{\varphi}$ and $\overline{\varphi}$ are Riemann integrable, completing the proof. ■

1.18 From Cavalieri to Fubini: Integrating Functions via Hypographs

AI Extraction Protocol
Segment: 30:42 – 45:00 (End of Lecture)

Segment Transition

The professor has just finished the rigorous dyadic-cube proof of Cavalieri's Principle for n-dimensional sets. He erases the center and right chalkboards to transition to the ultimate goal of the lecture: applying this geometric slicing principle to the calculus of multi-variable functions.

1.19 From Sets to Functions: The Hypograph

Spoken Protocol [30:42 - 34:15]

We have successfully and rigorously established Cavalieri's Principle for the volumes of multi-dimensional sets. But we are taking a class on Analysis, not just geometry, so we must now ask: how do we extend this logic to the integration of functions?
You will recall that much earlier in the semester, when we first defined the Riemann integral of a positive function f over a domain A, we defined it strictly in terms of the measure of its hypograph.
What is the hypograph geometrically? It is the $(n+1)$-dimensional solid region situated directly beneath the graph of the function and directly above the base domain A. If we wish to integrate a function $f(x,y)$ over a product space $\mathbb{R}^k \times \mathbb{R}^{n-k}$, we are effectively seeking the $(n+1)$-dimensional volume of this overarching solid block.
Therefore, integrating a function is fundamentally identical to measuring a physical shape. We can simply apply Cavalieri's Principle directly to this $(n+1)$-dimensional hypograph. By taking vertical slices of this solid, we reduce a massive multi-dimensional volume calculation into an iterated sequence of much simpler lower-dimensional integrals. This elegant corollary is what we call Fubini's Theorem.

Recalling the Hypograph Connection

The professor moves to the freshly cleaned center board. He writes down the formal definition of an integral via the hypograph, establishing the crucial bridge between the pure geometry of Cavalieri and the operational calculus of Fubini.

Integral as a Measure of the Hypograph

Let $f : A \to \mathbb{R}_{\geq 0}$ be a Riemann integrable function over a Jordan measurable set $A \subset \mathbb{R}^n$. The hypograph of f is defined as the $(n+1)$-dimensional set:

$$\mathrm{Hypo}(f) = \{(x,z) \in \mathbb{R}^n \times \mathbb{R} \mid x \in A,\ 0 \leq z \leq f(x)\}$$

By our foundational definition, the integral of the function is identically the measure of this set:

$$\int_A f(x)\,dx = \mu_{n+1}(\mathrm{Hypo}(f))$$

Insight: The Geometric Unification

This is the grand unification of the lecture. By framing the integral not as an abstract analytic operation, but as a literal physical volume (the hypograph), the "potato slicing" intuition mastered with Cavalieri's Principle can be seamlessly applied directly to abstract function integration.

1.20 Statement of Fubini's Theorem

Spoken Protocol [34:15 - 38:00]

Let us formalize this into a proper theorem. Suppose we partition our base domain space $\mathbb{R}^n$ into a Cartesian product $\mathbb{R}^k \times \mathbb{R}^{n-k}$, utilizing coordinate vectors x and y respectively. Let A be our domain of integration, and $f(x, y)$ be our continuous, integrable function hovering above it.
If we freeze a base coordinate $x \in \mathbb{R}^k$, treating it strictly as a constant, we can restrict our function to the corresponding vertical slice of the domain, A_x. We shall denote this restricted, lower-dimensional function as $f_x(y)$.
Under Fubini's Theorem, assuming the requisite integrability conditions hold over the individual slices, the total n-dimensional integral of f over the entire domain A is exactly equivalent to the iterated integral!
Operationally, what does this mean? You first integrate the restricted function $f_x(y)$ with respect to y over the slice A_x. Because x was held constant, the result of this inner integral is a new marginal function purely in terms of x. Subsequently, you integrate this resulting marginal function with respect to x over the base projection of the domain.

Formalizing the Sliced Function

The professor meticulously writes out the notation for the restricted function $f_x(y)$. He taps the board with his chalk under the x variable to emphasize to the students that x must be treated purely as a constant scalar during the inner integration step. He then writes the full statement of Fubini's Theorem in bright orange chalk.

Function Restriction and Iteration

Given a function $f : A \to \mathbb{R}$ where the domain $A \subset \mathbb{R}^k \times \mathbb{R}^{n-k}$.
For a fixed, constant $x \in \mathbb{R}^k$, define the slice domain $A_x = \{y \mid (x, y) \in A\}$.
We define the restricted slice function $f_x : A_x \to \mathbb{R}$ as:

$$f_x(y) = f(x, y) \quad \text{(treating } x \text{ strictly as a constant)}$$

Highlighted Board Formula

Theorem 6 (Fubini's Theorem)**.** *Let $A = X \times Y$ be a compact, Jordan measurable domain, and $f : A \to \mathbb{R}$ be integrable. The multiple integral can be evaluated sequentially as an iterated integral:*

$$\int_A f(x, y)\, d(x, y) = \int_X \left(\int_{A_x} f(x, y)\, dy \right) dx = \int_Y \left(\int_{A_y} f(x, y)\, dx \right) dy$$

1.21 Visualizing the Iterated Integral

Spoken Protocol [38:00 - 42:30]

To truly grasp the mechanics of Fubini's Theorem and prevent algebraic mistakes, one must visualize the sequential nature of this volume accumulation.
When we evaluate the inner integral—integrating $f(x, y)$ strictly with respect to y while holding x frozen at some value x_0—what are we calculating geometrically? We are calculating the exact 2D cross-sectional area of the solid hypograph at that specific coordinate x_0.
This inner integral effectively collapses the massive $(n+1)$-dimensional solid into a one-dimensional density function residing on the base axis. The outer integral then sweeps this cross-sectional area across the entire length of the domain X, accumulating those differential slices to arrive at the total total measure of the solid.
The symmetry of the theorem ensures that the order of accumulation—whether sweeping left-to-right along the x-axis or front-to-back along the y-axis—is irrelevant to the final numerical volume, provided your integration boundaries A_x and A_y are properly accounted for.

The Hypograph Cross-Section

The professor moves to the right board to draw a 3D perspective of a curved surface floating above a rectangular domain in the xy-plane. He uses red chalk to shade a specific 2D planar cross-section beneath the surface, labeling its area as the exact result of the inner integral, $\int f(x_0, y)dy$.

Geometric Visualization of Fubini's Theorem

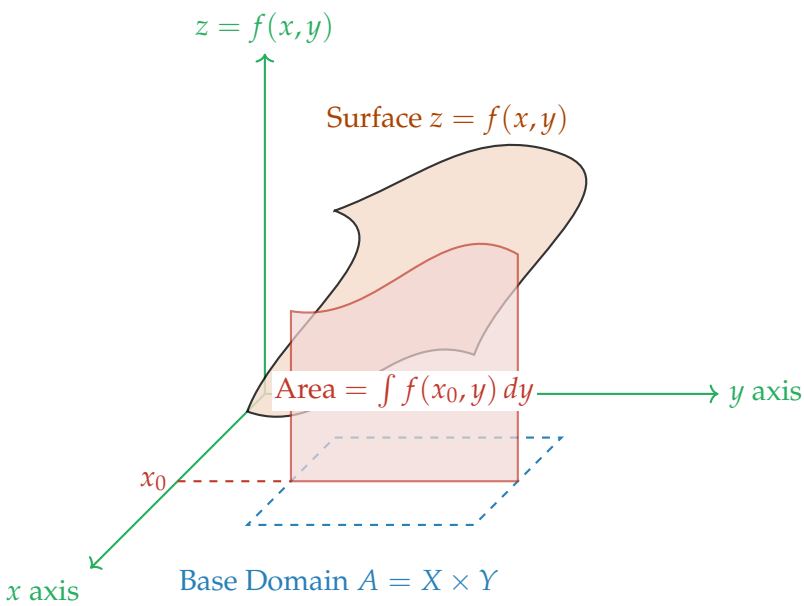

Explanation of Steps (Why the Order Matters for Limits):
The visual clarifies a crucial geometric concept: why the bounds of integration change when swapping dx and dy. The red slice represents the inner integral: evaluating the area of the 2D plane at a constant x_0. As x_0 moves along the x-axis, the boundaries of

that slice might grow or shrink if the base domain A is not a perfect rectangle (e.g., a triangle or a circle). The outer integral then integrates this continuously changing 1D area function along the x-axis to get the final 3D volume.

Spoken Protocol [42:30 - 45:00]

So, Fubini's Theorem is not magic; it is simply Cavalieri's Principle applied to the volume under a graph. By treating one variable as a constant, you reduce a multivariable problem into a sequence of single-variable calculus problems that you already know how to solve from Analysis I.

We will spend the next lecture doing heavy computational examples of this, swapping the bounds of integration, and looking at how this interacts with our Change of Variables theorem from last week. Please review your single-variable integration techniques tonight, because you will be doing them twice as much now. Have a good afternoon, everyone.

1.22 Integration, Volumes, and Fubini's Theorem

Polar Coordinates Substitution in $\mathbb{R}^3$

The mapping $\Psi : D \to \mathbb{R}^3$ for spherical (polar) coordinates is defined as:

$$\Psi(y_1, y_2, y_3) = \begin{pmatrix} y_1 \cos y_2 \cos y_3 \\ y_1 \sin y_2 \cos y_3 \\ y_1 \sin y_3 \end{pmatrix}$$

Where the domain D is the open box:

$$D = (0,1) \times (0, 2\pi) \times \left(-\frac{\pi}{2}, \frac{\pi}{2}\right)$$

The volume transformation leverages the Jacobian determinant:

$$\underbrace{dx}_{\text{Original Volume Element}} = \underbrace{|\det J\Psi(y)|\, dy}_{\text{Scaled Volume Element}} = y_1^2 \cos y_3 \, dy$$

Highlighted Board Formula

Theorem 7 (Fubini's Theorem Formulation)**.** *By decomposing the space as $\mathbb{R}^n \equiv \mathbb{R}^k \times \mathbb{R}^{n-k}$, we can express the integral of f over a bounded box $[-C, C]^n$ via its marginals:*

$$\int_{[-C,C]^n} f(x,y)\, d(x,y) = \int_{[-C,C]^k} \overline{\varphi}(x)\, dx = \int_{[-C,C]^k} \underline{\varphi}(x)\, dx$$

where the upper and lower marginals are:

$$\underline{\varphi}(x) = \underline{\int}_{[-C,C]^{n-k}} f(x,y)\, dy \quad \textit{and} \quad \overline{\varphi}(x) = \overline{\int}_{[-C,C]^{n-k}} f(x,y)\, dy$$

Spoken Protocol [00:00:03 - 00:02:08]

The plan for today is to finish our discussion of integration and provide more details on the proof of the Change of Variables formula. We will return to the formal proof later, but for now, I want to finish these parts, especially the examples, so that you can begin computing them. We will see many examples: some with me, some in the problem sessions, and some by yourselves. Once we do this, all this abstract theory will land on solid ground, and you will be able to understand it much better.
As motivation from Monday's lecture, we were trying to compute the volume of a ball in $\mathbb{R}^3$. We computed the volume of the disk in $\mathbb{R}^2$ with a trick, but when we try to do the same in $\mathbb{R}^3$, we must apply the Change of Variables formula using polar coordinates. Look at the board: these are the polar coordinates. We established that in polar coordinates, the volume element dx is replaced by the new volume element dy, scaled by the determinant of the Jacobian. If you compute the Jacobian matrix and then its determinant, you will see exactly this value.

Spoken Protocol [00:02:08 - 00:04:18]

So, we need to compute this integral. I mentioned last time that the image of our polar

coordinate domain D is not the completely full ball, but it equals the full ball up to a measure-zero set (i.e., the boundary planes that are excluded from the open domain D have no volume). Therefore, the volume of this domain equals the volume of the ball itself. We can compute this volume using the Change of Variables formula as an integral. But here we got stuck, because we did not know how to evaluate this multivariable integral.
Then we introduced the Cavalieri principle. This is a classic example of "divide and conquer" in mathematics. If you do not know how to compute an integral over a full volume, you compute it over a slice, thereby reducing the problem by one dimension to yield an easier integral. We stated the theorem for volumes of bodies, and then we stated the same theorem for integrals of functions. That was a bit complicated, but now, we will establish a corollary that is much easier to apply in practice.

Insight: Divide and Conquer Algorithm

The Cavalieri principle is beautifully framed not just as a geometric trick, but as an algorithmic strategy. A seemingly impossible 3D volume integral is broken down ("divide") into a continuous sequence of 2D slices ("conquer"), systematically reducing the dimensional complexity step-by-step.

Spoken Protocol [00:04:18 - 00:06:07]

Let me remind you of our setting. We are splitting the space $\mathbb{R}^n$ as a Cartesian product of $\mathbb{R}^k$ and $\mathbb{R}^{n-k}$. The x variable lives in $\mathbb{R}^k$, and the y variable lives in $\mathbb{R}^{n-k}$. Now, suppose we have a function that is Riemann integrable. We can assume that every Riemann integrable function is zero outside of a bounded set (since we are integrating over bounded domains), right? Let's say that the large box where the function is non-zero is $[-C, C]^n$. You can define these marginals—the lower and upper marginals. This means you fix one x, and then you look at the vertical slice on top of that x. You now have a function of y. Because the x is fixed, you can integrate this new function with respect to y. Sometimes, when you fix a specific x, you might be unlucky (e.g., the slice might intersect a pathological boundary), and the resulting function of y is no longer strictly Riemann integrable. However, what you can always do is define the lower and upper integrals. These are universally well-defined. Then, you plug them back in: you integrate this lower or upper marginal with respect to x. You do not need to care which one you choose, as both will yield the exact integral of f.

Defining the Marginals

$$\begin{aligned}
&\int_{[-C,C]^k} \underbrace{\underline{\varphi}(x)}_{\text{"Define the lower integral... always well-defined"}} \, dx \\
&= \int_{[-C,C]^k} \underbrace{\overline{\varphi}(x)}_{\text{"or the upper marginal... both yield the exact integral"}} \, dx \qquad (1.9) \\
&= \int f
\end{aligned}$$

Spoken Protocol [00:06:07 - 00:08:02]

This is the general theorem. But now, we will look at a practical corollary so that we do not have to deal with so many bars on the top and bottom of our integral signs. We will consider a very simple situation. Let K be a closed box, which we can express as a product of intervals forming a subset of $\mathbb{R}^n$. Furthermore, we are given a continuous function f mapping from K to $\mathbb{R}$.
We know, because we proved earlier that uniformly continuous functions over a Jordan measurable set are Riemann integrable, that this will work out perfectly (i.e., we do not need the upper and lower integrals because continuity guarantees integrability). This box is Jordan measurable, and the function is continuous over a compact set. Therefore, it is uniformly continuous, and thus, it is automatically Riemann integrable. I no longer need to be concerned about verifying this assumption. I simply want to state the following: the integral over the box of $f(x)\,dx$ can be computed iteratively. You first integrate with respect to x_n.

Highlighted Board Formula

Corollary 8 (The Practical Fubini Iteration)**.** Let $K = [a_1, b_1] \times [a_2, b_2] \times \cdots \times [a_n, b_n]$ be a closed box in $\mathbb{R}^n$. For any continuous function $f : K \to \mathbb{R}$, the integral evaluates via nested iteration:

$$\int_K f(x)\,dx = \int_{a_1}^{b_1} \cdots \underbrace{\left(\int_{a_n}^{b_n} f(x_1, \ldots, x_n)\,dx_n\right)}_{\text{“First, I integrate with respect to the } n\text{-th variable”}} \cdots dx_1$$

Spoken Protocol [00:08:02 - 00:10:22]

For now, we will put parentheses around the integrals, but later on, I will erase them to save time. The iteration continues with the integral over the second variable, all the way up to the last variable, x_n. What I mean is this: I take my function, which depends on n variables, and I first integrate it with respect to the n-th variable. The other variables are held constant; they are essentially frozen.
Once I integrate with respect to this variable (i.e., after evaluating the definite integral from a_n to b_n), the result only depends on the remaining variables, from x_1 up to x_{n-1}. Then, I integrate again, this time with respect to the next variable, and I continue this process until I get a final number. Let me apply it to a concrete example, so that you can see what this implies in reality. You first evaluate the interval from a_1 to b_1, then a_2 to b_2, and finally a_3 to b_3. The last integral you write down is actually the first one you compute. It acts like a parenthesis. An integral is naturally closed by its corresponding differential (e.g., dx_3). That is exactly why you do not need the parentheses; the dx_3 implicitly closes the innermost integral block, dx_2 closes the next one, and so on.

Spoken Protocol [00:10:22 - 00:12:46]

Let's look at an example. What is the integral of $y_1^2 \cos(y_3)$? Since the boundary has measure zero, the boundary of the set forms a box, and I can apply our theorem directly. Whether we integrate over the open set or the closed set is entirely the same (since the boundary is a set of measure zero and does not contribute to the integral's value), so please do not complain that our domain here is open! Notice I am also just changing

the variable names. Instead of calling them x, I will call them y, but the math is exactly the same. The intervals are y_1 in $[0,1]$, y_2 in $[0,2\pi]$, and y_3 in $[-\pi/2,\pi/2]$. Now, we are ready to start computing.

Setting up the Iterated Integral

Mapping the polar coordinate domain D into the iterated framework:

$$\text{Volume}(B_3) = \underbrace{\int_0^1}_{\text{“}y_1\text{ in }[0,1]\text{”}} \underbrace{\int_0^{2\pi}}_{\text{“}y_2\text{ in }[0,2\pi]\text{”}} \underbrace{\int_{-\pi/2}^{\pi/2} y_1^2\cos(y_3) \underbrace{dy_3}_{\text{“implicitly closes the inner block”}}}_{\text{“The last integral you write down is the first one you compute”}} dy_2\, dy_1$$

Spoken Protocol [00:12:46 - 00:14:05]

First, I need to compute the inner integral, from $-\pi/2$ to $\pi/2$, of $y_1^2\cos(y_3)\,dy_3$. Just as we do with partial derivatives, when you integrate with respect to y_3, you must remember that y_1 is fixed. So, you can think of it as a constant for now, and pull it completely out of the integral. This leaves us with y_1^2 multiplied by the integral of the cosine function. The primitive of cosine is sine, and we evaluate it between $-\pi/2$ and $\pi/2$ (i.e., $\sin(\pi/2)-\sin(-\pi/2) = 1-(-1) = 2$).

Step 1: The Inner Integral

$$\int_{-\pi/2}^{\pi/2} y_1^2\cos(y_3)\,dy_3 = \underbrace{y_1^2}_{\text{“think of it as a constant... pull it out”}} \cdot \underbrace{\Big[\sin(y_3)\Big]_{-\pi/2}^{\pi/2}}_{\text{“i.e., }\sin(\pi/2)-\sin(-\pi/2)=2\text{”}} = 2y_1^2$$

Spoken Protocol [00:14:05 - 00:15:00]

Once we have the result of this first integral, we insert it right back into the next layer. So, now, we need to compute the integral between 0 and 2π of $2y_1^2\,dy_2$. This is trivial because our integrand is now a constant with respect to y_2. It factors out of the integral, and you simply multiply it by the length of the interval, 2π, giving you $4\pi y_1^2$.
Finally, we reach the third step. We need to compute the integral from 0 to 1 of this remaining expression. The primitive of y_1^2 is $y_1^3/3$. Evaluating this between $y_1 = 0$ and $y_1 = 1$, I get exactly $\frac{4}{3}\pi$. That is the volume of the unit ball! Yes, we already knew this, and we remember being told this, right? But the earth is not flat, and some people still doubt it. Therefore, we must prove the things we were told in high school for ourselves to ensure the math is sound. And as you can see, we have successfully proven it.

Step 2 and 3: Resolving the Final Volume

Step 2 (Middle Integral):

$$\int_0^{2\pi} \underbrace{2y_1^2}_{\text{“trivial, because our integrand is now a constant”}} dy_2 = 2y_1^2\Big[y_2\Big]_0^{2\pi} = 4\pi y_1^2$$

Step 3 (Outer Integral):

$$\int_0^1 4\pi y_1^2 \, dy_1 = 4\pi \underbrace{\left[\frac{y_1^3}{3}\right]_0^1}_{\text{“The primitive of } y_1^2 \text{ is } y_1^3/3\text{”}} = 4\pi\left(\frac{1}{3} - 0\right) = \frac{4\pi}{3}$$

1.23 Alternative Methods and the Proof of Fubini in 3D

Cartesian Slicing vs. 3D Box Splitting

The left board contains a diagram of a 2D cross-section of a sphere sliced at height x_3. The right board sets up the formal 3D box definitions for the proof of Fubini's theorem.

Cartesian Slicing and Box Definition

Left Board: Cartesian Slicing of the Sphere

Using the Pythagorean theorem, the radius of the slice is written as:

$$r^2 + x_3^2 = 1 \implies r = \sqrt{1 - x_3^2}$$

The Cavalieri volume integral is established:

$$V = \int_{-1}^{1} \pi(1 - x_3^2)\, dx_3$$

Right Board: 3D Box Definition for Fubini's Proof

$$K = [a_1, b_1] \times [a_2, b_2] \times [a_3, b_3] \subset \mathbb{R}^3$$

The splitting strategy ($k = 1$):

$$\mathbb{R}^3 \equiv \underbrace{\mathbb{R}^1}_{x_1} \times \underbrace{\mathbb{R}^2}_{(x_2, x_3)}$$

Spoken Protocol [15:00 - 18:38]

So, is it clear how to apply the theorem in practice? Is it useful? Yes, absolutely. Now, we will move on to prove the corollary we just used. We understand what this corollary says, and the proof itself is not particularly difficult, although the formal statement can be a bit intimidating to read at first. Because this is the kind of exercise that everyone needs to know how to do, we must go through it. Are there any questions before we begin the proof?

Student Question

A student raises their hand and asks: "Would it not be easier to calculate the volume of the unit sphere just using the slicing lemma directly, without doing a change of variables? Just slicing the sphere into circles?"

Spoken Protocol [18:38 - 21:05]

You are asking if we could calculate the volume of the unit sphere without doing a change of variables, simply by slicing it into circles. It is true, you can certainly slice the sphere like that. You can do it, but it is not necessarily easier! Let's look at what that entails. You can slice it horizontally, along the x_3-axis, which we can call the height.
The Cavalieri principle says that you can integrate from -1 to 1, and in each slice, you compute the area of the resulting disk. By using Pythagoras, if the hypotenuse is 1, and the vertical distance is x_3, the radius squared of this disk is exactly $1 - x_3^2$. So, you can

also evaluate this integral to find the volume. However, notice that you must remember how to compute the primitive of this specific polynomial function. You always need to do some extra work here. In contrast, with the polar coordinates we just used, the primitives were completely trivial.

Direct Cartesian Slicing

Setting up the integral based on the student's suggestion:

$$\text{Volume} = \underbrace{\int_{-1}^{1}}_{\text{“integrate from } -1 \text{ to } 1\text{”}} \underbrace{\pi(1-x_3^2)}_{\text{“the radius squared of this disk is exactly } 1-x_3^2\text{”}} \underbrace{dx_3}_{\text{“along the } x_3\text{-axis”}}$$

Insight: The Hidden Cost of Cartesian Integration

Acknowledging geometric intuition highlights a vital pragmatic truth: Cartesian slicing often leads to integrating roots and complex polynomials. Polar coordinates, while requiring the initial setup of a Jacobian determinant, radically simplify the actual calculus, reducing the integrands to basic trigonometric functions and constants.

Spoken Protocol [21:05 - 24:15]

Okay, let us move on to the proof of the corollary. Because this is Analysis II, there is often a big leap from Analysis I—where you can visualize everything very well—to abstract n-dimensional spaces, where some people struggle. That is completely normal! For concreteness, I will do this proof in three dimensions. The proof in your notes is in n dimensions, and it is exactly the same, but with a general n. This is an exercise I am telling you to do all the time: whenever a proof is too abstract in n dimensions, just write it down in 2 or 3 dimensions, and you will see exactly what is going on. Simplify. How do we proceed in 3D? We will use Fubini's theorem with $k = 1$. We have our box, K, and we split the space such that the first variable is in one dimension, and the other two are in a two-dimensional box.

First Dimensional Split ($k = 1$)

Applying the general Fubini theorem to the 3D box K:

$$\int_K f = \underbrace{\int_{a_1}^{b_1}}_{\text{“first variable is in one dimension”}} \underbrace{\Phi_1(x_1)}_{\text{“marginal function”}} dx_1$$

Spoken Protocol [24:15 - 26:10]

The integral of our function over the box is equal to the integral over $[a_1, b_1]$ of the marginal function, which we will call $\Phi_1(x_1)$. Now, what exactly is this marginal? It is the integral over the remaining two-dimensional box, $[a_2, b_2] \times [a_3, b_3]$, of our function with respect to x_2 and x_3.
Because f is continuous over the entire box, if we fix x_1, the restriction of f to this 2D plane is also a continuous function. Since it is a continuous function over a closed, two-

dimensional box, it is automatically integrable. We do not need to worry about upper and lower integrals here; the integral is perfectly well-defined.

Expanding the Marginal Φ_1

$$\Phi_1(x_1) = \underbrace{\int_{[a_2,b_2]\times[a_3,b_3]}}_{\text{“remaining two-dimensional box”}} \underbrace{f(x_1,x_2,x_3)}_{\text{“if we fix } x_1\text{, the restriction is continuous”}} \underbrace{d(x_2,x_3)}_{\text{“with respect to } x_2 \text{ and } x_3\text{”}}$$

Spoken Protocol [26:10 - 28:00]

Now, we need to compute this inner, two-dimensional integral. But we can simply apply the exact same idea again! To compute this integral, we use Fubini's theorem once more with $k = 1$, but this time, in dimension 2. We reduce the problem by one more dimension.
We integrate over $[a_2, b_2]$ with respect to x_2, and the new marginal inside is the integral over $[a_3, b_3]$ of f with respect to x_3. Here, both x_1 and x_2 are fixed. We integrate with respect to x_3, we get a number, and then we move x_2.

Second Dimensional Split (Applying Fubini to the 2D slice)

$$\int_{[a_2,b_2]\times[a_3,b_3]} f\, d(x_2,x_3) = \underbrace{\int_{a_2}^{b_2}}_{\text{“integrate over } [a_2,b_2]\text{”}} \left(\underbrace{\int_{a_3}^{b_3} f(x_1,x_2,x_3)\, dx_3}_{\text{“both } x_1 \text{ and } x_2 \text{ are fixed”}} \right) \underbrace{dx_2}_{\text{“then we move } x_2\text{”}}$$

Spoken Protocol [28:00 - 30:00]

If you substitute this all back into our first equation, you see that it gives you exactly the triple nested formula I wrote before: an integral from a_1 to b_1, a_2 to b_2, and a_3 to b_3. End of the proof!
If you look at the notes, it is the exact same proof in n dimensions. It simply introduces notation for these successive domains that become smaller and smaller as we integrate out variables one by one. There are two things in every theorem: the theoretical proof, and the practical application. To pass the exam, you need to at least be able to apply the theorem without hesitation. If you have some doubts about the abstract proof, that understanding will come with time, but understanding how to apply it is absolutely crucial.

Theorem 9 (Concluded 3D Fubini Iteration)**.** *Substituting the nested marginals back into the original split yields the final iterated form:*

$$\int_K f = \underbrace{\int_{a_1}^{b_1} \int_{a_2}^{b_2} \int_{a_3}^{b_3} f(x_1,x_2,x_3)\, dx_3\, dx_2\, dx_1}_{\text{“exactly the triple nested formula I wrote before”}}$$

This recursive logic extends to n dimensions.

Spoken Protocol [30:32 - 32:44]

Now you substitute this back, and this yields exactly the formula I wrote before: the triple integral over the bounds a_1 to b_1, a_2 to b_2, and a_3 to b_3 of $f(x_1, x_2, x_3)\, dx_3\, dx_2\, dx_1$. And that concludes the proof!

With this in mind, if you consult the lecture notes, you will see it is the exact same proof in n dimensions. It simply introduces notation for these successive domains that become smaller and smaller as we integrate out variables one by one, and you get the exact same result.

As with every theorem, there are two aspects: the theoretical proof and the practical application. To pass the exam, you need to at least be able to apply the theorem without hesitation. If you still have some doubts about the abstract proof, that understanding will come with time, but understanding how to apply it is absolutely crucial. Are there any questions about this? If it is okay, we can move on.

Insight: Bridging Abstraction and Calculation

Explicitly acknowledging the cognitive load of n-dimensional abstraction lowers anxiety. By giving "permission" to focus on the mechanical application of Fubini's theorem first, it ensures one doesn't get stuck on the rigorous n-dimensional notation while still building intuition in 3D space.

1.24 Differentiation Under the Integral Sign

Spoken Protocol [32:56 - 37:37]

To wrap up our unit on integration, I will introduce a final, crucial tool: differentiation under the integral sign. This is something you will absolutely need, not just in this class, but extensively in physics and partial differential equations.

Consider a scenario in physics where you are integrating a density of charge, say $q(x, t)$, which depends on both space x and time t. The charge density varies over time, but you integrate it over a fixed spatial volume to find the total mass or total charge. If you then want to compute the rate of change of that total mass with respect to time, you must take the derivative of the integral. Because the spatial volume is fixed, you can pass this time derivative directly inside the integral sign, applying it as a partial derivative to the density function itself. You will use this constantly in physics, often without even saying why it is true. Today, we will establish exactly why.

Formal Statement of the Theorem (37:40 - 41:03)

The physical analogy is formalized into rigorous mathematics by defining a compact spatial set K and a time interval $[a, b]$.

Setup: Let $K \subset \mathbb{R}^n$ be a compact set. Let $f : K \times [a, b] \to \mathbb{R}$ defined by $(x, t) \mapsto f(x, t)$.

Assumptions: Assume f is continuous, and the partial derivative with respect to the last variable, $\frac{\partial f}{\partial t}$, is also continuous on the closed set $K \times [a, b]$.

Conclusion: For every $t_0 \in (a, b)$:

$$\left.\frac{d}{dt}\right|_{t_0} \int_K f(x, t)\, dx = \int_K \frac{\partial f}{\partial t}(x, t_0)\, dx$$

Spoken Protocol [37:40 - 41:03]

Let us formalize this. Let K be a compact subset in $\mathbb{R}^n$, representing our space. We define a real-valued function f mapping from $K \times [a, b]$—where the interval represents our time domain—to $\mathbb{R}$. We assume not only that f is continuous, but also that its partial derivative with respect to the time variable, $\frac{\partial f}{\partial t}$, is continuous on this closed product space.
Under these conditions, for any time t_0 in the open interval, the total derivative with respect to t of the integral of $f(x, t)$ over K is exactly equal to the integral over K of the partial derivative of f evaluated at t_0 (i.e., $\frac{d}{dt}\Big|_{t_0} \int_K f(x, t)\, dx = \int_K \frac{\partial f}{\partial t}(x, t_0)\, dx$). When you take a function that depends on space and time, and you integrate with respect to space, the only free variable remaining is time. So, taking the derivative on the outside is a standard Analysis 1 derivative of a single variable, but pushing it inside turns it into a partial derivative.

Swapping Operations

The core of this theorem is the commutative property of limit operations under specific continuity conditions. The integral is a limit of Riemann sums, and the derivative is a limit of a difference quotient. Swapping "$\frac{d}{dt}$" and "$\int$" is only strictly valid because $\frac{\partial f}{\partial t}$ is uniformly continuous on the compact domain $K \times [a, b]$.

1.25 Proof: Differentiation Under the Integral Sign

Setting up the Limit Definition

Let us define a 1-dimensional function for the spatial integral:

$$F(t) = \int_K f(x, t)\, dx$$

We want to compute $F'(t_0)$. By the definition of the derivative:

$$F'(t_0) = \lim_{h \to 0} \frac{F(t_0 + h) - F(t_0)}{h}$$

Substituting the integrals back into the limit:

$$F'(t_0) = \lim_{h \to 0} \frac{\int_K f(x, t_0 + h)\, dx - \int_K f(x, t_0)\, dx}{h}$$

By the linearity of the integral, we combine the terms:

$$F'(t_0) = \lim_{h \to 0} \int_K \frac{f(x, t_0 + h) - f(x, t_0)}{h}\, dx$$

Spoken Protocol [41:03 - 44:55]

Let us begin the proof. We want to compute the derivative with respect to t at t_0. By definition, this is the limit as h approaches zero of the difference quotient (i.e.,

$\lim_{h\to 0} \frac{F(t_0+h)-F(t_0)}{h}$). To make this cleaner, let's introduce a new function $F(t)$ representing the spatial integral of $f(x,t)$ (i.e., $F(t) = \int_K f(x,t)\,dx$).

We are simply computing $F'(t_0)$, which is the limit of $\frac{F(t_0+h)-F(t_0)}{h}$. Because the integral is a linear operator, we can group these two integrals into one. We bring the difference quotient inside, dividing the difference $f(x,t_0+h) - f(x,t_0)$ by h.

This is starting to look much better—it strongly resembles the definition of the partial derivative! All that remains is to formally justify that we can pass the limit as h goes to zero inside the integral. We will finish that rigorous justification after the break, showing that this converges exactly to the integral of the partial derivative.

1.26 Proof: Differentiation Under the Integral Sign

Formal Proof Setup: Differentiation Under the Integral Sign

Before finishing the proof, the professor references the formal theorem established on the board.

Highlighted Board Formula

Theorem 10 (Differentiation Under the Integral Sign). *Let $K \subset \mathbb{R}^n$ be a compact subset. Let $f : K \times [a,b] \to \mathbb{R}$ be a continuous function, $f(x,t)$. Assume that both f and its partial derivative $\partial_t f$ are continuous on $K \times [a,b]$. Then for every $t_0 \in (a,b)$:*

$$\frac{d}{dt}\bigg|_{t=t_0} \underbrace{\int_K f(x,t)\,dx}_{F(t)} = \int_K \partial_t f(x,t_0)\,dx$$

Step-by-Step Proof of Differentiation Under the Integral Sign. **Step 1: Formulating the Difference Quotient**

Spoken Protocol [00:00:09 - 00:01:20]

Let's finish this proof. All that remains to show is how to handle the limit of our incremental quotient. By the definition of the derivative for our integral $F(t)$, we pull the limit outside. Because the integral is linear, we can combine the terms into a single integral. We would like to replace this incremental quotient inside the integral by the partial derivative, which is almost there. However, we need to compute the estimate a bit better.

The Incremental Quotient

Using $F(t) = \int_K f(x,t)\,dx$, we express the derivative as a limit:

$$F'(t_0) = \lim_{h\to 0} \frac{F(t_0+h) - F(t_0)}{h} = \lim_{h\to 0} \int_K \underbrace{\frac{f(x,t_0+h) - f(x,t_0)}{h}}_{\text{"incremental quotient"}}\,dx$$

Step 2: Applying the Mean Value Theorem

Spoken Protocol [00:01:20 - 00:02:10]

To do this, we will use the Mean Value Theorem, right? By the Mean Value Theorem, we know that the incremental quotient (i.e., $\frac{f(x,t_0+h)-f(x,t_0)}{h}$) is equal to the partial derivative at some intermediate point. Let's call this intermediate point ξ_x, noting that it depends strictly on x. If we assume that h is positive, just for simplicity, then this ξ_x belongs to the open interval (t_0, t_0+h).

MVT Substitution

Applying the Mean Value Theorem (MVT) to the integrand for each fixed x:

$$\text{By MVT: } \underbrace{\frac{f(x, t_0 + h) - f(x, t_0)}{h}}_{\text{"incremental quotient"}} = \underbrace{\partial_t f(x, \xi_x)}_{\text{"partial derivative at some intermediate point"}}$$

$$\text{where } \underbrace{\xi_x \in (t_0, t_0 + h) \quad \text{for } (h > 0)}_{\text{"this } \xi_x \text{ belongs to the interval"}}$$

Step 3: Leveraging Uniform Continuity

Spoken Protocol [00:02:10 - 00:03:00]

On the other hand, because our partial derivative $\partial_t f$ is continuous on the compact set $K \times [a, b]$ by assumption, it is also uniformly continuous. This means that for every ε, there exists a δ such that if h is less than δ, then the difference between our intermediate point ξ_x and t_0 is also less than δ (i.e., $|h| \leq \delta \implies |\xi_x - t_0| \leq \delta$). Therefore, if the difference is small, the partial derivative at the point (x, ξ_x) minus the partial derivative at (x, t_0) is strictly less than ε (i.e., $|\partial_t f(x, \xi_x) - \partial_t f(x, t_0)| \leq \varepsilon$). Uniform continuity allows me to uniformly control how close these values are. This is crucial because ξ_x is a point that is very, very close to t_0.

Uniform Continuity Bound

Because $\partial_t f \in C^0(K \times [a, b])$ and the domain is compact, $\partial_t f$ is uniformly continuous:

$$\underbrace{\forall \varepsilon > 0 \, \exists \delta > 0 \text{ s.t. } |h| \leq \delta \implies |\xi_x - t_0| \leq \delta}_{\text{"uniformly control how close these values are"}}$$

This guarantees that the deviation of the partial derivative is uniformly bounded across all $x \in K$:

$$\implies \underbrace{|\partial_t f(x, \xi_x) - \partial_t f(x, t_0)| \leq \varepsilon}_{\text{"is less than } \varepsilon\text{"}}$$

Step 4: Bounding the Error Term and Passing the Limit

Spoken Protocol [00:03:00 - 00:06:18]

And when we do this, we can plug it into our integral. Let me continue the chain of equalities using this estimate. I want to compute the limit, when h goes to 0, of the integral of the incremental quotient with respect to x.
I can say this is equal to the integral of the partial derivative $\partial_t f(x, t_0)$ plus some error term, which I will call $E(x)$. This error $E(x)$ is exactly the difference between the partial derivative at the intermediate point and the partial derivative at t_0. Because of the uniform continuity we just established, we know that this error $E(x)$ is bounded in absolute value by ε (i.e., $|E(x)| \leq \varepsilon$).
So, you are integrating an error term over a set K that has bounded measure. The measure of our compact set K is just a constant, right? So, the integral of the error is bounded by ε times this constant measure (i.e., $\varepsilon \cdot \mu(K)$). Then, when you send h to 0, you can take δ to be very, very small, which forces ε to go to 0 as well. As ε goes to zero, the error

integral vanishes, and you get the exact equality we wanted to prove in the theorem.

Vanishing Error Term

We decompose the integral into the desired derivative and a residual error:

$$\int_K \underbrace{\frac{f(x,t_0+h)-f(x,t_0)}{h}}_{\partial_t f(x,\xi_x)} dx = \int_K \Big(\underbrace{\partial_t f(x,t_0)}_{\text{“the partial derivative”}} + \underbrace{E(x)}_{\text{“some error term”}} \Big)\, dx$$

Where $E(x) = \partial_t f(x,\xi_x) - \partial_t f(x,t_0)$. Since $|E(x)| \leq \varepsilon$, the integral of the error is bounded:

$$\left| \int_K E(x)\, dx \right| \leq \int_K |E(x)|\, dx \leq \underbrace{\varepsilon \cdot \mu(K)}_{\text{“}\varepsilon\text{ times this constant measure”}}$$

Taking the limit as $h \to 0$ forces $\varepsilon \to 0$, making the error term vanish:

$$\lim_{h\to 0} \int_K \frac{f(x,t_0+h)-f(x,t_0)}{h}\, dx = \int_K \partial_t f(x,t_0)\, dx$$

Explanation of Steps (The Power of Uniformity): By bounding the error term $E(x)$ uniformly across the entire domain K, we guarantee that the "worst-case" deviation of the difference quotient from the true partial derivative is still just ε. Because the spatial volume $\mu(K)$ is finite and fixed, shrinking h squeezes this worst-case error volume perfectly to zero, leaving only the exact integral of the partial derivative.

□

Spoken Protocol [00:06:18 - 00:08:45]

So again, what is very important, what you should remember, is the intuition on this blackboard over here. When you compute the derivative under the integral sign, what you're essentially doing is taking an incremental quotient. Because the integral is linear, you can always put the incremental quotient inside the integral. Then, to justify it fully and rigorously mathematically, you need to use the uniform continuity of the partial derivative, and then everything works out perfectly.

1.27 Improper Integrals

Highlighted Board Formula

Definition 2 (Improper Integral)**.** Let $U \subset \mathbb{R}^n$ be an open set. Let $f : U \to \mathbb{R}$ be a continuous function such that $f \geq 0$. We define the improper integral of f over U as the supremum of integrals over compact, Jordan measurable subsets:

$$\int_U f(x)\, dx = \sup \left\{ \int_K f \mid K \subset U, K \text{ compact and Jordan measurable} \right\}$$

Spoken Protocol [00:08:45 - 00:12:07]

This is our last, and very easy, definition. Sometimes you may think you have a function that does not really satisfy all of the assumptions to be strictly Jordan-Riemann integrable. However, you can still give a very good, rigorous meaning to the integral in many concrete situations, especially if the function is defined on an open set.
Here is the definition. Suppose we have some open set $U \subset \mathbb{R}^n$, and we have a continuous function f from U to $\mathbb{R}$. Let's assume that f is non-negative. We can then define the improper integral of f over U. We define this integral as the supremum of the integral of f over K, where K is any compact, Jordan measurable subset of U.
Whatever the exact definition of the set U is, intuitively, the integral over the whole open set should be bigger than the integral over any compact subset K, because f is non-negative. You can approximate any open set from the inside by a sequence of Jordan measurable compact sets, as fine as you want. By declaring that the value of the total integral is this supremum, I now have a solid way to integrate non-negative functions over open sets.

Approximating the Open Set

$$\underbrace{\int_U f(x)\,dx}_{\text{"integral over the whole open set"}} = \sup\left\{ \underbrace{\int_K f}_{\text{"bigger than over any compact subset"}} \;\middle|\; \underbrace{K \subset U}_{\text{"approximate inside"}}, K \text{ cpt. J.m.} \right\}$$

Highlighted Board Formula

Proposition 11 (Sequential Evaluation of Improper Integrals)**.** If we have an increasing sequence of compact sets $K_0 \subset K_1 \subset \cdots \subset K_\ell \ldots$ such that $U = \bigcup_{\ell=0}^{\infty} K_\ell$, then:

$$\int_U f(x)\,dx = \lim_{\ell\to\infty} \int_{K_\ell} f(x)\,dx$$

Instructive Proof of Sequential Exhaustion.

Spoken Protocol [00:12:07 - 00:15:00]

Let's make a first observation. Whenever I have an increasing sequence of nested open sets—or rather, compact sets—let's call them $K_0 \subset K_1 \subset \cdots \subset K_\ell \ldots$, such that their union covers U.
So, if U is the union of all K_ℓ (i.e., $U = \bigcup_{\ell=0}^{\infty} K_\ell$), then the integral over U of f is exactly the same as the limit, when ℓ goes to infinity, of the integral of f over K_ℓ. In our definition, we are taking the supremum over a massive collection of all possible Jordan measurable compact sets. But in practice, it is enough to take just one increasing sequence of compact sets that exhausts your open set. You can easily construct sequences like this using cubes.
Why is the limit of the sequence the same as the supremum? Because if you give me

any fixed compact set K, and I have a sequence of sets whose interiors eventually cover everything, then K will be covered by a finite subcover (i.e., $K \subset \bigcup_{i=0}^{N} \operatorname{int}(K_i) \subset K_N$).

Finite Subcover Argument

To prove this sequential limit equals the supremum, we take an arbitrary compact, Jordan measurable set $K \subset U$. Because the interiors of the sequence K_ℓ cover U (and therefore K), the compact set K admits a finite subcover from this sequence:

$$K \subset \underbrace{\bigcup_{i=0}^{N} \operatorname{int}(K_i)}_{\text{“covered by a finite subcover”}} \subset K_N$$

Since $f \geq 0$, expanding the domain of integration monotonically increases the integral. Therefore, for any such K, there exists an integer N such that:

$$\int_K f \leq \underbrace{\int_{K_N} f}_{\text{“limit of the sequence”}} \leq \lim_{\ell \to \infty} \int_{K_\ell} f$$

Taking the supremum over all such $K \subset U$ proves that the supremum is bounded by (and thus equals) the sequential limit:

$$\sup_{K \subset U} \int_K f = \lim_{\ell \to \infty} \int_{K_\ell} f$$

Explanation of Steps (Topological Exhaustion): This is a beautiful interplay between topology and calculus. The abstract definition of an improper integral requires checking an infinite, uncountably massive collection of compact subsets K. But the topological property of compactness guarantees that any such K will be completely swallowed by our expanding sequence K_ℓ at some finite index N. Therefore, simply taking the limit of one sequence naturally captures the supremum over all sets.

□

1.28 Example: The Gaussian Integral

Problem Setup: Evaluating the Gaussian Integral

The professor moves to a fresh blackboard to provide a capstone example. This problem combines the new theory of improper integrals, Fubini's theorem, and the Change of Variables formula.

Exercise (The Gaussian Integral)**.** Compute the integral over the entirety of $\mathbb{R}^2$ of the 2D Gaussian function:

$$\int_{\mathbb{R}^2} e^{-x^2-y^2}\,dx\,dy$$

Step-by-Step Evaluation of the Gaussian Integral. **Step 1: Exhausting $\mathbb{R}^2$ with Expanding Balls**

Spoken Protocol [16:58 - 19:22]

Now, we will do a practical example so that you see exactly what I mean by exhausting an open set. I will do an example to practice both improper integrals and the change of variables formula. Let us compute the integral over $\mathbb{R}^2$ of the function $e^{-x^2-y^2}$.
This is an improper integral because $\mathbb{R}^2$ is an open set; it is not a compact set. However, the function $e^{-x^2-y^2}$ is strictly positive everywhere. Therefore, we can safely apply our new definition for non-negative functions. How will we exhaust $\mathbb{R}^2$? I will exhaust it by taking a sequence of expanding balls. We will take the limit as R goes to infinity of the integral over the ball of radius R, centered at zero, of this function. This sequence of nested balls clearly exhausts the entire space.

Exhaustion by Expanding Balls

Because the integrand is non-negative, we apply the sequential evaluation property, exhausting $\mathbb{R}^2$ using closed balls $B_R(0)$:

$$\int_{\mathbb{R}^2} e^{-x^2-y^2}\,dx\,dy = \underbrace{\lim_{R\to\infty}\int_{B_R(0)} e^{-x^2-y^2}\,dx\,dy}_{\text{“limit as } R \text{ goes to infinity over the ball of radius } R\text{”}}$$

Step 2: Transforming to Polar Coordinates

Spoken Protocol [19:22 - 24:00]

Now, how do I actually compute this integral over the ball? I will use a change of variables, specifically polar coordinates. As we saw before, x^2+y^2 becomes r^2. The Jacobian determinant of this transformation gives me an extra factor of r (i.e., $|\det J| = r$). The limits of integration for the angle ϕ are 0 to 2π, and for the radius r, from 0 up to R.
We can then apply Fubini's corollary to evaluate it iteratively. The integral with respect to ϕ is trivial and just gives 2π. What is the primitive of re^{-r^2}? It is simply $-\frac{1}{2}e^{-r^2}$. Evaluating this primitive from 0 to R, we plug in the boundaries and obtain exactly $\pi(1-e^{-R^2})$ (since evaluating at R and 0 gives $-\frac{1}{2}e^{-R^2}-(-\frac{1}{2}) = \frac{1}{2}(1-e^{-R^2})$, which we multiply by 2π).

Polar Coordinates and Fubini's Theorem

Applying the polar substitution $x = r\cos\phi$, $y = r\sin\phi$ with the Jacobian volume scaling factor $|\det J| = r$:

$$\int_{B_R(0)} e^{-x^2-y^2}\,dx\,dy = \int_0^{2\pi}\int_0^R \underbrace{e^{-r^2}}_{\text{“becomes } r^2\text{”}} \underbrace{r}_{\text{“extra factor of } r\text{”}}\,dr\,d\phi$$

Using Fubini's theorem to separate the variables and evaluate the iterated integral:

$$= \underbrace{\left(\int_0^{2\pi} 1\,d\phi\right)}_{\text{“just gives } 2\pi\text{”}}\left(\int_0^R re^{-r^2}\,dr\right) = 2\pi \underbrace{\left[-\frac{1}{2}e^{-r^2}\right]_0^R}_{\text{“evaluating this primitive from 0 to } R\text{”}}$$

$$= 2\pi\left(-\frac{1}{2}e^{-R^2} - \left(-\frac{1}{2}\right)\right) = \underbrace{\pi(1-e^{-R^2})}_{\text{“we obtain exactly this”}}$$

Step 3: Taking the Limit to Infinity

Spoken Protocol [24:00 - 25:00]

Finally, we must take the limit as our radius R goes to infinity. As R becomes infinitely large, the term e^{-R^2} decays to 0, leaving us with exactly π. So, the improper integral over all of $\mathbb{R}^2$ for this Gaussian function is simply π.

Evaluating the Limit

$$\lim_{R\to\infty} \pi(1 - \underbrace{e^{-R^2}}_{\text{“decays to 0”}}) = \pi(1-0) = \underbrace{\pi}_{\text{“integral over all of } \mathbb{R}^2\text{”}}$$

Step 4: The 1D Gaussian Integral (Exhausting by Squares)

Spoken Protocol [25:00 - 29:00]

But wait! Because the value of an improper integral is completely independent of the sequence of compact sets we choose to exhaust the space, we can exhaust $\mathbb{R}^2$ in another way. Let us exhaust it by squares instead of balls! We define our sequence of expanding squares as $K_R = [-R, R] \times [-R, R]$. Because the sequence doesn't matter, the limit as R goes to infinity over these expanding squares must also evaluate to exactly π.
Notice that our function $e^{-x^2-y^2}$ can be split into $e^{-x^2}e^{-y^2}$. Using Fubini's theorem, we can split this two-dimensional integral over the square into the product of two identical, independent one-dimensional integrals. This gives us the square of the integral from $-R$ to R of e^{-x^2}. Taking the limit as R goes to infinity, we find that the integral from $-\infty$ to ∞ of e^{-x^2} squared is π. Therefore, taking the square root, the one-dimensional integral is exactly $\sqrt{\pi}$ (i.e., $\int_{-\infty}^{\infty} e^{-x^2}\,dx = \sqrt{\pi}$). This is the famous Gaussian integral, which you will see absolutely everywhere in probability!

Exhaustion by Squares and Algebraic Factoring

By the topological independence of the exhausting sequence, we evaluate the same improper integral using squares $K_R = [-R, R]^2$:

$$\lim_{R\to\infty} \int_{[-R,R]^2} e^{-x^2-y^2}\, dx\, dy = \pi$$

Using Fubini's theorem to cleanly factor the separable integrand across the rectangular domain:

$$\int_{-R}^{R}\int_{-R}^{R} \underbrace{e^{-x^2}e^{-y^2}}_{\text{"split into..."}}\, dx\, dy = \left(\int_{-R}^{R} e^{-x^2}\, dx\right)\left(\int_{-R}^{R} e^{-y^2}\, dy\right) = \underbrace{\left(\int_{-R}^{R} e^{-x^2}\, dx\right)^2}_{\text{"the square of the integral"}}$$

Equating the limits to our known 2D volume yields the standard 1D Gaussian integral:

$$\left(\int_{-\infty}^{\infty} e^{-x^2}\, dx\right)^2 = \pi \implies \underbrace{\int_{-\infty}^{\infty} e^{-x^2}\, dx = \sqrt{\pi}}_{\text{"the famous Gaussian integral"}}$$

□

Real Analysis: Measuring Volumes on Submanifolds

Lecture Commencement

The professor walks to the center of the blackboard, holding a small toy gavel. The blackboard is clean, and the camera is fixed on the main panel.

Insight: The Gavel and the "Extra Circus"

The professor opens the lecture holding a toy gavel, explicitly preparing the students for an "extra circus". This playful, theatrical prop serves a distinct pedagogical purpose: acknowledging the escalating difficulty of the material ("The Final Boss of Analysis II") while keeping the classroom atmosphere grounded and engaged. He beautifully recalls his earlier, informal "potato" analogies to show how far the class's rigor has progressed.

2.1 Recall: The Final Boss of Analysis II

Spoken Protocol [00:00:00 - 00:00:58]

So I brought back the gavel because today I expect extra circus, okay?
So, remember that I told you on the first day that the final goal, or the final boss of Analysis II, or one of the most representative theorems, is this Divergence Theorem. And in the first days, I needed to state it very informally using "potatoes" and stuff because you did not know mathematically any of the elements. But now we saw the statement again some weeks ago, and we already knew some parts. And now we know almost all of it. Right?

Board Action: Divergence Setup

The professor places the gavel on the desk and begins writing the formal elements of the Divergence Theorem on the left side of the blackboard, underlining the conditions for the domain and the vector field.

Spoken Protocol [00:00:58 - 00:01:55]

I will remind you of the statement. Now we know many of the elements: Ω in $\mathbb{R}^n$ is an open, bounded set. The boundary $\partial\Omega$ will be a C^1 submanifold. This we know what it means. Now, F will be a C^1 function up to the boundary, taking values in $\mathbb{R}^n$. This is a vector field.
And the theorem says that the integral over Ω of this combination of partial derivatives—the derivative i of the component i of the vector field—and you integrate with respect to the Jordan measure (i.e., the Riemann integral, dx)... this is equal to this integral

over the boundary of the domain with respect to the surface measure of the boundary.

Spoken Protocol [00:01:55 - 00:02:40]

Now we know, and this is F multiplied by the normal vector, which we already saw what is a tangent vector and a normal vector to the boundary. So more or less everything you know what it is now, except for one thing: this integral over a surface, of the differential of volume in the surface (i.e., dS). We know how to integrate on the full space, but not over a curved extra surface.

Divergence Theorem (The Final Boss)

Theorem 12 (Divergence Theorem)**.** *Let $\Omega \subset \mathbb{R}^n$ be an open, bounded set, and $\partial\Omega$ a C^1 submanifold. Let $F \in C^1(\overline{\Omega}, \mathbb{R}^n)$ be a vector field. The theorem states:*

$$\int_\Omega \sum_{i=1}^n \partial_i F_i \, dx = \int_{\partial\Omega} F \cdot \underbrace{\nu}_{\text{Unit vector normal to } \partial\Omega} \underbrace{dS}_{\text{Surface measure (Unknown)}} \tag{2.1}$$

The Unknown Surface Measure

The entire motivation for this lecture hinges on dS. While the left side of the equation uses the standard n-dimensional volume measure dx that the students have mastered via the Riemann integral and Fubini's Theorem, the right side requires integrating over an $(n-1)$-dimensional curved manifold embedded in $\mathbb{R}^n$. We do not yet have a mathematical definition for how to rigorously quantify this "curved volume".

2.2 Defining Integrals over d-dimensional Submanifolds

Spoken Protocol [00:02:40 - 00:03:35]

And this is where we are going today. We are going to learn, to define what is the integral over the surface. Okay, so next step in our quest: define the integral over d-dimensional submanifolds.
And to define an integral, as it happened in the case of $\mathbb{R}^n$, first we need to define how to measure the volume of sets over a submanifold. So today, towards this goal, what we will do is measure volumes over submanifolds of dimension d.

Board Action: Quest Log

The professor draws a distinct box on the middle panel to represent the current "Quest Log", a recurring motif in his lectures to keep the overarching goal visible.

Spoken Protocol [00:03:35 - 00:04:20]

Towards this goal, we start by the easiest case. What is the easiest possible submanifold? It is the submanifold of dimension one. Right? So let us start by $d = 1$. A submanifold of dimension one, we call it a curve. And we will see how to measure length. So we need to introduce length.

Quest Log: Volumes and Curves

Next Step: Define $\int$ over d-dim submanifolds.
Today's Objective: Measure volumes over submanifolds of $\dim d$.
We build intuition starting with the simplest case:

- $\dim d = 1 \implies$ **Curve** $\implies$ "Volume" is defined as **Length**.

2.3 Formalizing Curves in $\mathbb{R}^n$

Spoken Protocol [00:04:20 - 00:05:18]

So, how do we rigorously characterize a one-dimensional submanifold? We use what we call a parametrized curve. We start with a simple interval, let us call it $[a, b]$, on the real line, and we map it into our higher-dimensional space $\mathbb{R}^n$ using a function that we will denote as γ.
Now, we cannot just use any arbitrary function. We want our curve to be smooth, without any jagged edges or sudden jumps. Therefore, we require γ to be continuously differentiable (i.e., $\gamma \in C^1([a, b], \mathbb{R}^n)$).

Board Action: Injectivity and Regularity

He underlines the C^1 condition heavily. Then he draws a curve intersecting itself to visually demonstrate why injectivity might be considered, before shifting focus entirely to the non-zero derivative condition to prevent cusps.

Spoken Protocol [00:05:18 - 00:06:10]

Furthermore, to avoid pathological cases where the curve stops or creates a sharp cusp, we must enforce that the derivative vector—the velocity—is never the zero vector at any point t (i.e., $\gamma'(t) \neq 0$ for all t). If these conditions hold, we say the curve is regular.

Definition of a Regular Parametrized Curve

We define a **parametrized curve** as a map:

$$\gamma : [a, b] \to \mathbb{R}^n$$

We say that γ is a **regular curve** if it satisfies two conditions:

1. $\gamma \in C^1([a, b], \mathbb{R}^n)$
2. $\gamma'(t) \neq 0$ for all $t \in [a, b]$

Spoken Protocol [00:06:10 - 00:07:05]

Once we have this regular curve, the immediate next question is: how do we compute its length? Think about physics for a second. If $\gamma(t)$ represents your position in space at time t, then the derivative $\gamma'(t)$ is your velocity vector. If you want to know how far you have traveled, you do not just look at the velocity vector; you look at your speed, which is the magnitude of that velocity vector (i.e., $\|\gamma'(t)\|$).

Spoken Protocol [00:07:05 - 00:07:15]

If you integrate your speed over the entire duration of your journey, from time a to time b, you obtain the total distance traveled. This total distance is exactly what we define as the length of the curve.

Length of a Parametrized Curve

Definition 3 (Arc Length)**.** Let $\gamma : [a, b] \to \mathbb{R}^n$ be a regular parametrized curve. The **length** of γ, denoted as $L(\gamma)$, is defined by the integral of the Euclidean norm of its derivative:

$$L(\gamma) = \int_a^b \|\gamma'(t)\| \, dt \tag{2.2}$$

2.4 Geometric Independence and the Axioms of Length

Spoken Protocol [00:07:15 - 00:08:30]

Now, here is the conceptual leap we must make. The length $L(\gamma)$ that we just defined depends explicitly on the parametrization γ. It depends on the specific function and the specific time interval. But length, fundamentally, is a geometric property of the set of points in space, not a property of how fast you drive along them.

Spoken Protocol [00:08:30 - 00:09:30]

If two different people drive along the exact same path, but one drives twice as fast, the geometric length of the path they covered is exactly the same, even though their parametrizations are completely different. Therefore, if our formula is to make any geometric sense, we need to prove that it is invariant under reparametrization.

Reparametrization Setup

Let $\phi : [c, d] \to [a, b]$ be a bijective, C^1 function with $\phi'(s) \neq 0$ for all $s \in [c, d]$. We define a reparametrization of γ as:

$$\tilde{\gamma}(s) = \gamma(\phi(s))$$

Our analytical goal: We must show that $L(\tilde{\gamma}) = L(\gamma)$.

Spoken Protocol [00:09:30 - 00:10:30]

Before we prove that our integral formula actually survives this reparametrization mathematically, we have to take a step back. We are constructing a measure of volume—specifically, a 1-dimensional volume, which is length. But what does it even mean to be a valid measure of length?

Spoken Protocol [00:10:30 - 00:11:30]

We cannot just write down an integral, compute it, and blindly accept it as "length". There are fundamental, axiomatic properties that any concept of length must satisfy in

Euclidean space. If our formula fails even one of these, it is not a valid measure. So we must set the ground rules.

Spoken Protocol [00:11:30 - 00:12:30]

If we are going to define a concept as fundamental as length, it cannot just be a random formula we pull from the air. It has to behave in the way our physical universe expects lengths to behave. If it does not, then we have defined something else entirely.
So, before we even look at the integral of the norm of the velocity, we must ask ourselves: what properties *must* length satisfy? What are the absolute baseline requirements? There will be four. So there will be four fundamental axioms that govern any valid measurement of length.

Classroom Interaction: The Catchbox

The professor walks back to the main desk. He writes the numbers 1 through 4 on the far right blackboard, leaving the definitions blank. He then picks up a bright red throwable "Catchbox" microphone and tosses it to a student in the audience.

Spoken Protocol [00:12:30 - 00:13:15]

Okay, so what properties must length satisfy? I have written four empty slots on the board. Maybe you can tell me two, and I will complete the other two. Who wants to catch this? Tell me what properties length must satisfy. Who has a guess for the most obvious property a length should have?

Student Question

It has to be positive? You can't have a negative length. And you just add them together if you have multiple pieces?

Spoken Protocol [00:13:15 - 00:14:15]

Exactly! First, we have positivity, but more rigorously, we need normalization. The length of the straight unit interval (i.e., $[0,1] \times \{0\}$ in $\mathbb{R}^n$) must exactly equal 1. And yes, it must be additive. If we split a curve into two pieces, the total length must be the sum of the lengths of the individual pieces.

Spoken Protocol [00:14:15 - 00:15:00]

Now I will complete the other two, which are the geometric anchors. We already discussed one: it should be independent of the chosen parametrization. The geometric length does not care how fast you draw the curve. And finally, invariance under Euclidean isometry. If I rotate or translate the curve rigidly in space, its length cannot change.

The Four Axioms of Length

Definition 4 (Axioms of Length)**.** For a definition of length $L(\gamma)$ to be geometrically valid for a curve $\gamma : [a, b] \to \mathbb{R}^n$, it *must* satisfy:

1. **Independence of Parametrization:** $L(\gamma \circ \phi) = L(\gamma)$ for any valid reparametrization ϕ.
2. **Additivity:** For any $c \in (a, b)$, $L(\gamma|_{[a,b]}) = L(\gamma|_{[a,c]}) + L(\gamma|_{[c,b]})$.
3. **Euclidean Isometry Invariance:** Rigid rotations and translations do not alter $L(\gamma)$.
4. **Normalization:** The standard unit interval $[0, 1] \times \{0\}$ has a length of 1.

2.5 Proving the Invariance

Spoken Protocol [00:15:00 - 00:16:30]

Let us focus on the first property we established: Independence of Parametrization. We need to rigorously prove that our integral formula actually honors this axiom.
Suppose we have our reparametrization ϕ mapping the interval $[c, d]$ to $[a, b]$. We assume ϕ is strictly increasing, so its derivative is strictly positive (i.e., $\phi'(s) > 0$). We want to compute the length of the new, reparametrized curve $\tilde{\gamma}(s) = \gamma(\phi(s))$.

Board Action: The Chain Rule Setup

The professor walks over to the center panel of the blackboard, pointing at the definition of the regular curve, and begins writing out the composition of the functions to apply the Chain Rule.

Spoken Protocol [00:16:30 - 00:17:45]

How do we find its velocity vector? We just apply the Chain Rule. The derivative $\tilde{\gamma}'(s)$ is simply the derivative of the outer function evaluated at the inner function, multiplied by the derivative of the inner function (i.e., $\tilde{\gamma}'(s) = \gamma'(\phi(s)) \cdot \phi'(s)$).

Applying the Chain Rule

Given the reparametrized curve $\tilde{\gamma}(s) = \gamma(\phi(s))$ for $s \in [c, d]$.
By the Chain Rule, the velocity vector is:

$$\tilde{\gamma}'(s) = \gamma'(\phi(s))\phi'(s)$$

Taking the Euclidean norm of both sides:

$$\|\tilde{\gamma}'(s)\| = \|\gamma'(\phi(s))\phi'(s)\| = \|\gamma'(\phi(s))\||\phi'(s)|$$

Since we assume ϕ is strictly increasing, $\phi'(s) > 0$, yielding $|\phi'(s)| = \phi'(s)$.

$$\implies \|\tilde{\gamma}'(s)\| = \|\gamma'(\phi(s))\|\phi'(s)$$

Spoken Protocol [00:17:45 - 00:19:00]

Now we plug this norm directly into our length formula for $\tilde{\gamma}$. We get the integral from c to d of $\|\gamma'(\phi(s))\|\phi'(s)\,ds$.
Does this look familiar? It is exactly the setup for the 1-dimensional Change of Variables formula—or as you likely learned it in Analysis I, Integration by Substitution.

Spoken Protocol [00:19:00 - 00:20:00]

If we substitute $t = \phi(s)$, then our differential dt is exactly $\phi'(s)ds$. The limits of integration change from c and d to $\phi(c) = a$ and $\phi(d) = b$. And as if by magic, the formula collapses back perfectly into the length of the original curve γ. The geometry is entirely preserved. We have proven the first axiom.

Integration by Substitution

Computing the length of the reparametrized curve $\tilde{\gamma}$:

$$\begin{aligned} L(\tilde{\gamma}) &= \int_c^d \|\tilde{\gamma}'(s)\|\,ds \\ &= \int_c^d \|\gamma'(\phi(s))\| \quad \underbrace{\phi'(s)\,ds}_{\text{Substitution: } dt} \end{aligned}$$

Let $t = \phi(s)$. The differential becomes $dt = \phi'(s)ds$. The boundaries transform as: $t(c) = \phi(c) = a$ and $t(d) = \phi(d) = b$.

$$\begin{aligned} L(\tilde{\gamma}) &= \int_a^b \|\gamma'(t)\|\,dt \\ &= L(\gamma) \end{aligned}$$

Explanation of Steps: We have successfully demonstrated that the total arc length is invariant under an orientation-preserving reparametrization, confirming the first fundamental axiom of length. The 1D substitution rule elegantly offsets the scaling of the velocity vectors.

CHAPTER 3

Real Analysis: Cavalieri's Principle

Spoken Protocol [00:00:00 - 00:00:04]

Okay, so.

Spoken Protocol [00:00:04 - 00:00:10]

Let me continue with the statement. So, we were trying to state this theorem that I informally described as cutting the "potato", right? But now we are trying to be more serious.

Spoken Protocol [00:00:10 - 00:00:19]

And I was introducing this notation. So, this theorem, you will see, is a bit the opposite of the Change of Variables formula. The Change of Variables formula is a very simple statement and a very hard proof. This is a very complicated statement, but the proof is very easy, right?

3.1 The General Setup: Cavalieri's Principle for Sets

Spoken Protocol [00:00:19 - 00:00:39]

So, we have our measurable set. Let me do a drawing. So, we have our set A, right? That is contained in a box. Here, we will put the y-axis, and this is the x-axis. This is actually $\mathbb{R}^k$, and on the y-axis we have $\mathbb{R}^{n-k}$, right? And the whole space is $\mathbb{R}^n$, the product of the two.

Geometric Visualization Setup for Cavalieri's Principle

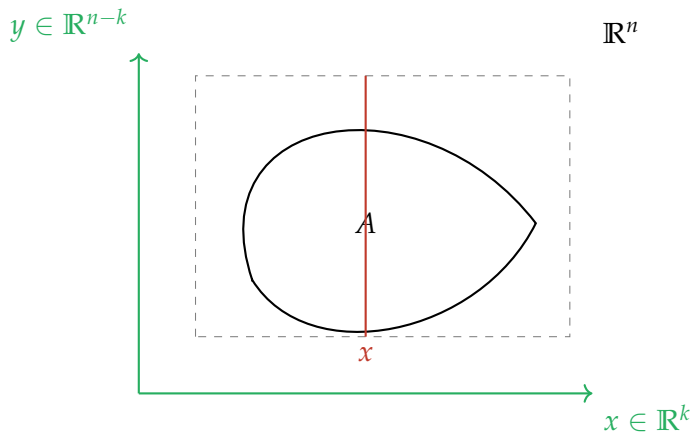

Explanation of Steps: We visualize an arbitrary Jordan measurable set A within $\mathbb{R}^n$, which is decomposed into a Cartesian product of $\mathbb{R}^k$ (our x-axis) and $\mathbb{R}^{n-k}$ (our y-axis). This setup allows us to consider "slices" of the set A.

Spoken Protocol [00:00:39 - 00:01:23]

Okay, now we are saying that our set is contained in some box, but this is not very important. So, this is the box, a very large box. And now for x inside of my box, so this will be some x here, an x point, I will consider the slice. So, the relevant piece is this slice over here. This is what I'm calling A_x. Well, the projection... So, A_x will be the projection onto this axis, right? So, you take this set and you project it. So, you take the y-coordinate, so given the x, you take the y-coordinates of the pairs (x, y), is over there. The y-coordinates of the pairs (x, y) that belong to A.

Formalizing the Slices of Set A

Let $A \subset \mathbb{R}^n$ be a Jordan measurable set. We can express $\mathbb{R}^n$ as a product space $\mathbb{R}^k \times \mathbb{R}^{n-k}$, where we denote points as (x, y). For any fixed $x \in \mathbb{R}^k$, we define the slice A_x as:

$$A_x = \{y \in \mathbb{R}^{n-k} \mid (x, y) \in A\}$$

For A to be Jordan measurable, it must be bounded. We assume A is contained within a large box, so A_x will be a bounded subset of $\mathbb{R}^{n-k}$, which we denote as:

$$A_x \subset (-c, c)^{n-k} \subset \mathbb{R}^{n-k}$$

Spoken Protocol [00:01:47 - 00:02:20]

And now this set, here is very nice, because in the drawing it's an interval, right? But this, we are in very high dimensions, maybe. So, this is just a subset of... A_x is a subset of $\mathbb{R}^{n-k}$. It's a bounded subset, but we just know that it's just containing $(-c, c)^{n-k}$, right? In the box. And what we can do, because we know that A is Jordan measurable, but maybe the slices are not Jordan measurable. But we can surely consider these marginals, the $\bar{\varphi}$ that was the... So, we can always measure the μ^{out}_{n-k} and the μ^{in}_{n-k}. So, the measure from inside and outside of this set is always well-defined. And this is what defines the

function $\overline{\varphi}$ and $\underline{\varphi}$ of x, right?

Upper and Lower Measures of Slices

Given the slices A_x, even if A_x itself is not Jordan measurable (meaning its inner and outer measures may not coincide), we can always define its $(n-k)$-dimensional outer measure and inner measure:

$$\overline{\varphi}(x) = \mu_{n-k}^{\text{out}}(A_x) \quad \text{and} \quad \underline{\varphi}(x) = \mu_{n-k}^{\text{in}}(A_x)$$

These functions, $\overline{\varphi}(x)$ and $\underline{\varphi}(x)$, map from $\mathbb{R}^k$ to $\mathbb{R}$.

Highlighted Board Formula

Theorem 13 (Cavalieri's Principle for Jordan Measurable Sets)**.** *Let $A \subset \mathbb{R}^n$ be a Jordan measurable set. We consider the decomposition $\mathbb{R}^n = \mathbb{R}^k \times \mathbb{R}^{n-k}$, with coordinates (x, y). For each $x \in [-c, c]^k$, we define the slices $A_x = \{y \in \mathbb{R}^{n-k} \mid (x, y) \in A\}$. We then define the upper and lower marginal functions:*

$$\overline{\varphi}(x) = \mu_{n-k}^{out}(A_x) \quad \textit{and} \quad \underline{\varphi}(x) = \mu_{n-k}^{in}(A_x)$$

Then, both $\overline{\varphi} : [-c, c]^k \to \mathbb{R}$ and $\underline{\varphi} : [-c, c]^k \to \mathbb{R}$ are Riemann integrable functions over $[-c, c]^k$, and their integrals are equal to the total n-dimensional measure of A:

$$\int_{[-c,c]^k} \overline{\varphi}(x)\, dx = \int_{[-c,c]^k} \underline{\varphi}(x)\, dx = \mu_n(A)$$

Spoken Protocol [00:02:20 - 00:03:20]

So, this is the setup, and the theorem says that under these assumptions, under these definitions, then both functions, the $\bar{\varphi}(x)$ and $\underline{\varphi}(x)$ are Riemann integrable. And the integral of them in the set $[-c, c]^k$ is equal to the integral of the other one, which is equal to the measure of A. So this integral is... You sum so the $\bar{\varphi}$ is the measure of each slice. You are taking the measure of these slices. Now you can tell me, maybe for some slices this measure is not well-defined, because the outer measure and the inner measure do not coincide. I tell you, don't worry, just put any, the outer or the inner. I don't care. Because when you integrate, the outer or the inner or anything in between, it will give you always the measure... It will recover the measure of your set A.

Proof.

Spoken Protocol [00:03:20 - 00:04:31]

Okay, so let's prove that. So maybe to do the proof, I will do a drawing. So remember my notation: this is the y, this is the x-axis. This is my set A, right? And now, always when we want to prove something about Jordan measure, remember that we were approximating our set from inside and outside. We will take the approximation from inside, right? Something like this, some approximation from inside. And then there will be the approximation from outside. And now, since our set is measurable, it's Jordan measurable, we can take a very small pixel size, 2^{-p}. This will be the pixel size. And we can

take an inner and an outer approximation of our set by the dyadic... so by by pixels, right? By the dyadic sets. This is the inner, this is the outer. And now, the difference between these two is very, um, is is is less than ϵ. We can take the volume of the red minus the volume of the yellow is less than ϵ for every ϵ we want.

Approximation with Dyadic Cubes (2^{-p})

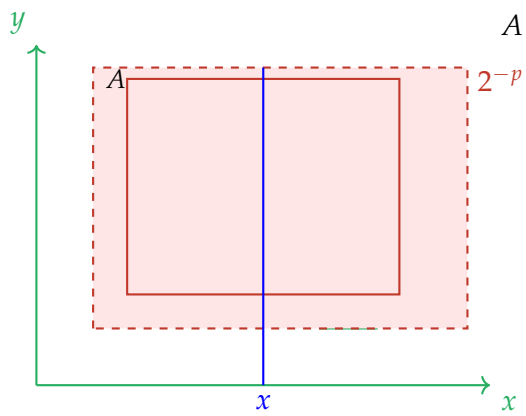

Explanation of Steps: We approximate the Jordan measurable set A from inside and outside using unions of dyadic cubes ("pixels") of side length 2^{-p}. Let F_p be the union of dyadic cubes entirely contained within A (inner approximation, shown in green), and G_p be the union of dyadic cubes that intersect A (outer approximation, shown in red). We can choose p large enough such that the difference in their measures is arbitrarily small, $\mu_n(G_p) - \mu_n(F_p) < \epsilon$.

Spoken Protocol [00:04:31 - 00:05:20]

And now we will we will see what happens when we take a slice of this set. When we take a slice of this set like this, let's say we take x and we slice, right? What we see is that the the slice of my... the slice of A contains the slices of the yellow and is contained in the slices of the red. But when you when you start to move x like this, when you start to move x, you will see that whenever you move x less than the size of the pixel, you're not jumping here. So the the function, the function, um, so the marginal's idea: the marginal densities computed for the two, for the yellow set and for the, um, the dyadic, the dyadic inner and outer approximations. So what is this again? What is this, um, these marginal? The marginal is just take the the yellow set, for instance. Compute, given some x, what is the intersection, right? And you see, because this is a union of cubes, when you intersect with a hyperplane parallel to the to the, or with a plane parallel to to to the y-axis, this also gives you a union of cubes, just of lesser dimensions. And then the measure of this, then it's constant. When you move x here in the dyadic cube, this you will always get the same. You will always get the same, all the time you will get the same. And then only when you jump to the next dyadic cube, maybe you jump here, because it's like a staircase. So the marginal densities computed in the inner and outer approximations are the dyadic step functions. This is the key observation. And now we will write this, so so they are dyadic step functions in x. So this will, they approximate the Riemann integral. The dyadic step functions are what we need, or what

we use, to approximate the Riemann integral.

Dyadic Cube Definition and Product Space

Given a dyadic cube (pixel 2^{-p}) in $\mathbb{R}^n$: A general dyadic cube $Q_p^n(z)$ of side length 2^{-p} at point $z \in \mathbb{R}^n$ is defined as:

$$Q_p^n(z) = z + 2^{-p}[0,1)^n$$

If z is expressed in product coordinates as $z = (a, b)$ where $a \in \mathbb{R}^k$ and $b \in \mathbb{R}^{n-k}$, then the n-dimensional dyadic cube can be factored into lower-dimensional dyadic cubes:

$$Q_p^n(z) = Q_p^k(a) \times Q_p^{n-k}(b)$$

Similarly, for a dyadic cube of dimension m:

$$Q_p^m(\bar{z}) = \bar{z} + 2^{-p}[0,1)^m \subset \mathbb{R}^m$$

Spoken Protocol [00:05:20 - 00:06:01]

So, this is how we are going to proceed. This is the picture, and now we will write it formally. So, the idea is that, given a dyadic cube of size 2^{-p} in $\mathbb{R}^n$, we have... so we will say, okay, $Q_p^n(z)$ is $z + 2^{-p}[0,1)^n$, right? And since now there will be several dimensions, let me put the dimension here as a sub-index $Q_p^n(z)$. This is n.

Spoken Protocol [00:06:01 - 00:06:57]

Now, if z is of the form (a, b) where $a \in \mathbb{R}^k$ and $b \in \mathbb{R}^{n-k}$, right? In this coordinate splitting, I take a z that has coordinates a and b, right? Then this cube $Q_p^n(z)$ is equal to $Q_p^k(a) \times Q_p^{n-k}(b)$. Right? Where I'm putting the Q_p^m of some $\bar{z}$ is $\bar{z} + 2^{-p}[0,1)^m$, this is a subset of $\mathbb{R}^m$. Right?

Dyadic Cubes and Approximations

Given dyadic sets F (inner) and G (outer) such that $F \subset A \subset G$, and their measures satisfy:

$$\mu(G) - \mu(F) < \epsilon$$

This holds for dyadic sets of pixel size 2^{-p} where $p \in \mathbb{N}$ is sufficiently large.

Spoken Protocol [00:06:57 - 00:08:14]

Something, something very complicated to write, but very trivial on the picture. I'm saying that the cube over here, the dyadic cube over here, is always the product of a cube over here times a dyadic cube over here, right? A cube in the in the dyadic cube in the full space is the product of a dyadic cube of the same size here, times a dyadic cube of the same size here. And a dyadic set, a dyadic set, the yellow or the red, to both applies, is just a finite union of these two cubes, right? Okay. So, now, given $\epsilon > 0$, let $p \in \mathbb{N}$ and F, G be dyadic sets such that $F \subset A \subset G$, and the measure of G minus the measure of F (so the measure of the larger minus the measure of the smaller) is less than

ϵ, right? So, this is the definition of a Jordan measurable set. We can trap it between dyadic sets, and the measure of the outer minus the measure of the inner is less than ϵ.

Slicing Dyadic Approximations

For $x \in [-c, c]^k$, define the slices of the outer and inner dyadic approximations:

$$G_x = \{y \in \mathbb{R}^{n-k} \mid (x, y) \in G\}$$

$$F_x = \{y \in \mathbb{R}^{n-k} \mid (x, y) \in F\}$$

Observation: If $Q_p^k(a) \subset \mathbb{R}^k$ is a dyadic cube of side length 2^{-p}, then for any $x, x' \in Q_p^k(a)$, the slices of the dyadic sets are identical:

$$F_x = F_{x'} \quad \text{and} \quad G_x = G_{x'}$$

Spoken Protocol [00:08:14 - 00:09:50]

And now we, for all $x \in [-c, c]^k$, define the slices $G_x = \{y \in \mathbb{R}^{n-k} \mid (x, y) \in G\}$, and similarly with F_x. Okay? So we do the slices of G_x. Now, observation, that is what I was trying to say with the drawing: if $Q_p(a) \subset \mathbb{R}^k$ is some dyadic cube of pixel size 2^{-p} (so of size of side length 2^{-p}), then what we see is because every cube in $\mathbb{R}^n$ is a product of cubes. You see that $F_x = F_{x'}$ for all $x, x' \in Q_p(a)$.

Defining Step Functions from Slice Measures

Let $f(x)$ be the measure of the inner dyadic slice and $g(x)$ be the measure of the outer dyadic slice:

$$f(x) := \mu(F_x)$$

$$g(x) := \mu(G_x)$$

These functions $f(x)$ and $g(x)$ are constant in each dyadic cube $Q_p^k(a)$, and are zero outside a bounding box $(-C, C)^k$. This implies $f(x)$ and $g(x)$ are dyadic step functions.

Spoken Protocol [00:09:50 - 00:10:33]

As long as the base point is moving in this cube, the slices cannot change; the slice is always constant. And the same is with the G. What does it mean? It means that if we now define... So, since this function, so since these functions are constant in each dyadic cube, this implies that F and G are dyadic step functions. And notice something else. That for each slice... So, this F is measuring...

Relating Measures to Riemann Integrals

Since $F_x \subset A_x \subset G_x$, we have the following inequality for the measures of the slices:

$$\underline{f(x)} \equiv \mu(F_x) \leq \mu_{in}(A_x) \leq \mu_{out}(A_x) \leq \mu(G_x) \equiv \overline{g(x)}$$

Integrating over the entire domain $[-c, c]^k$:

$$\int_{[-c,c]^k} f(x)\, dx \leq \int_{[-c,c]^k} \underline{\varphi}(x)\, dx \leq \int_{[-c,c]^k} \overline{\varphi}(x)\, dx \leq \int_{[-c,c]^k} g(x)\, dx$$

For dyadic step functions, the integral is simply the sum of the volumes of the dyadic cubes:

$$\int_{[-c,c]^k} f(x)\,dx = 2^{-n\cdot p} \cdot (\text{number of dyadic cubes in } F) = \mu_n(F)$$

And similarly for $g(x)$:

$$\int_{[-c,c]^k} g(x)\,dx = 2^{-n\cdot p} \cdot (\text{number of dyadic cubes in } G) = \mu_n(G)$$

Substituting these into the inequality:

$$\mu_n(F) \leq \int_{[-c,c]^k} \underline{\varphi}(x)\,dx \leq \int_{[-c,c]^k} \overline{\varphi}(x)\,dx \leq \mu_n(G)$$

Spoken Protocol [00:10:52 - 00:11:42]

This F is measuring this, right? For each x, this F is measuring the the number of pixels that are in this slice. And the G is measuring the number of pixels that are in the bigger slice of the red. So, what we always have is that for every x, F_x is contained in A_x, is contained in G_x, right? We have this inclusion, and this implies that the measure of F_x is less than the... The measure of an inner approximation is always less than the inner measure, that is less than the outer measure of A_x, that is less than or equal to the measure of the outer approximation. This for every x.

Spoken Protocol [00:11:42 - 00:14:47]

And this is... by definition, this function over here, this is $\underline{\varphi}(x)$, right? Of $\underline{\varphi}(x)$. And this is less than the... This, the integral of this... I can put the upper integral of the $\bar{\varphi}(x)$ and this is less than the integral of G. Which is equal to $\mu_n(G)$. Okay? Does that make sense? So, this is the chain of inequalities. Again, I repeat. This equality is just combinatorial, counting cubes. This equality is because this is a lower approximation of my integral. So, if you have a function that is below your function, and this is the dyadic step function, because the lower integral is defined as the supremum of those... this is always less than or equal to this, right? If two functions are ordered, like this the the, obviously the lower integral is always less than the upper integral. And and the $\underline{\varphi}$, that is the μ_{in}, is less than the μ_{out}. This is the $\bar{\varphi}$. So, the μ_{out} is the outer marginal. So, this inequality is also trivial, right? It's just because of ordering. And this is again the same function, but from a different argument, but from outside now. So, we know that this G is an approximation of the $\bar{\varphi}$; it is above the $\bar{\varphi}$, the G. So, the integral of the G must be bigger than the upper integral of the $\bar{\varphi}$, right? And again, this is combinatorial, the integral of G is the measure of G. Counting pixels.

Spoken Protocol [00:14:47 - 00:15:39]

But now we remember that this minus this was ϵ. But $\mu(G_\epsilon) - \mu(F_\epsilon)$ is less than ϵ. And actually, not only this, but the value... but we know that G_ϵ is contained in A, and sorry, F_ϵ is contained in A, and A is contained in G_ϵ. So, the measure of this is trapped in between, right? And then, putting this together with this, what does it what does it tell you? So, if I if I send ϵ to zero, all these integrals in between that do not depend on ϵ, you see, this is the depends on ϵ. These integrals need to be the same. When I send ϵ

to zero, you have my squeeze. So, this integral that a priori is less than this needs to be the same. This proved that these functions, both functions, are Riemann integrable, because the upper integral and the lower integral will coincide, right? And actually, all the two functions have the same value of the integral that is $\mu_n(A)$, because these these two values, right? So, what I wanted to say is that $\mu_n(F_\epsilon)$ is less than $\mu_n(A)$, is less than $\mu_n(G_\epsilon)$, right? So, when you send ϵ to zero, this value and this value are converging to the common value $\mu_n(A)$, right? And everything that is in between needs to converge to the same value.

Spoken Protocol [00:15:39 - 00:15:42]

So, this is how we prove the theorem.

□

Spoken Protocol [00:15:46 - 00:15:47]

Is there any question about this?

Spoken Protocol [00:16:00 - 00:16:21]

Okay, so, as I said, the main difficulty of this theorem is the notation. I need to introduce a lot of notation, and this is always confusing to anyone, right? So, when you introduce new notation, until you load it to your RAM memory, all this notation, you are confused by the notation, right? So, if you got lost at some point, you remember the "potato", that is what is important to understand the intuition, and then you go back with a cup of tea on the proof, and then you read step-by-step and you will see there's nothing mysterious. It's just a lot of notation.

Spoken Protocol [00:16:21 - 00:16:22]

Okay? And the key idea to remember is the counting argument.

3.2 Extension: Fubini's Theorem for Functions

Spoken Protocol [00:16:22 - 00:16:27]

So, now we will do an extension of this of this theorem.

Spoken Protocol [00:16:27 - 00:16:28]

That is for for functions.

Spoken Protocol [00:16:28 - 00:16:32]

It will actually be an immediate consequence of this theorem.

Fubini's Theorem: Erasing for Clarity

Explanation of Steps: The professor erases the board to prepare for Fubini's Theorem. He emphasizes that the previous proof for Cavalieri's Principle for sets is foundational and that Fubini's Theorem for functions is a direct extension, leveraging the same underlying logic.

Spoken Protocol [00:16:58 - 00:17:02]

So, Fubini's Theorem is the following. So, now we have a function...

Highlighted Board Formula

Theorem 14 (Fubini's Theorem)**.** *Let $A \subset \mathbb{R}^n$ be a bounded Jordan measurable set, and $f : A \to \mathbb{R}$ be a Riemann integrable function over A. We decompose $\mathbb{R}^n = \mathbb{R}^k \times \mathbb{R}^{n-k}$, with coordinates (x, y). We extend f to a function $\tilde{f} : \mathbb{R}^n \to \mathbb{R}$ by setting $\tilde{f}(x, y) = f(x, y)$ if $(x, y) \in A$ and $\tilde{f}(x, y) = 0$ if $(x, y) \notin A$. For $x \in \mathbb{R}^k$, we define the marginal functions:*

$$\underline{\varphi}(x) = \underline{\int_{\mathbb{R}^{n-k}} \tilde{f}_x(y)\, dy}$$

$$\overline{\varphi}(x) = \overline{\int_{\mathbb{R}^{n-k}} \tilde{f}_x(y)\, dy}$$

where $\tilde{f}_x(y) = \tilde{f}(x, y)$ (treating x as a constant parameter).
Then, $\underline{\varphi}(x)$ and $\overline{\varphi}(x)$ are Riemann integrable functions over $\mathbb{R}^k$, and their integrals are equal to the total integral of f over A:

$$\int_A f(x, y)\, d(x, y) = \int_{\mathbb{R}^k} \underline{\varphi}(x)\, dx = \int_{\mathbb{R}^k} \overline{\varphi}(x)\, dx$$

Spoken Protocol [00:17:02 - 00:17:22]

So, we have some $A \subset \mathbb{R}^n$ (bounded). Jordan measurable. Right? Now, as before, I will take the $\mathbb{R}^n$ as $\mathbb{R}^k \times \mathbb{R}^{n-k}$, and we'll call the coordinates here (x, y). Or do I need Jordan measurable? Maybe I don't even need Jordan measurable. I just need set bounded. And then I have a function f from A to $\mathbb{R}$ that is Riemann integrable over A.

Spoken Protocol [00:17:36 - 00:18:53]

And now I define... I will define $\tilde{f}$ just f multiplied by the characteristic function of A, right? Or if you want, this is the... So, $\tilde{f}$ will be $\tilde{f}(x, y)$ will be $f(x, y)$ if (x, y) belongs to A, and 0 if (x, y) does not belong to A, right? This is just a trivial way to extend the function to be defined everywhere, right? I just take zero where it is not defined. And then, um, I define the marginals. So for $x \in \mathbb{R}^k$, so for $x \in \mathbb{R}^k$, define the marginals. So, as before, $\underline{\varphi}$ will be the lower integral of... Now I take $\tilde{f}$ of x, so let me put it like this:

$\tilde{f}_x(y)\,dy$. Where I define $\tilde{f}_x(y)$ simply as $\tilde{f}(x,y)$. I'm putting it like this to be entirely sure that this is a function of... So, that you understand that this is a function defined in... So, this is with a tilde, tilde tilde. This is a function defined for y in $\mathbb{R}^{n-k}$.

Fubini's Theorem Statement

$$\int_A f\,d(x,y) = \int_{\mathbb{R}^k} \underline{\varphi}(x)\,dx = \int_{\mathbb{R}^k} \overline{\varphi}(x)\,dx$$

Spoken Protocol [00:18:53 - 00:19:14]

So, this given x, x is fixed now, x is fixed. So, this is a function of y, this is a function in $\mathbb{R}^{n-k}$. So, you can compute an integral or a lower integral is always well-defined, the the lower integral and the upper integral. You can compute the lower integral of this function with respect to the variables y, right? And we can do the same with the upper. These are definitions.

Spoken Protocol [00:19:14 - 00:19:53]

Now what the theorem says is that the integral in A of $f(x,y)$, so this is the integral in $\mathbb{R}^n$, right? Is the same as the integral of, um, now I need to integrate with respect to x. x lives in $\mathbb{R}^k$, right? Integral in $\mathbb{R}^k$ of $\underline{\varphi}(x)\,dx$. And this is the same as taking the upper.

Visualizing Fubini's Theorem

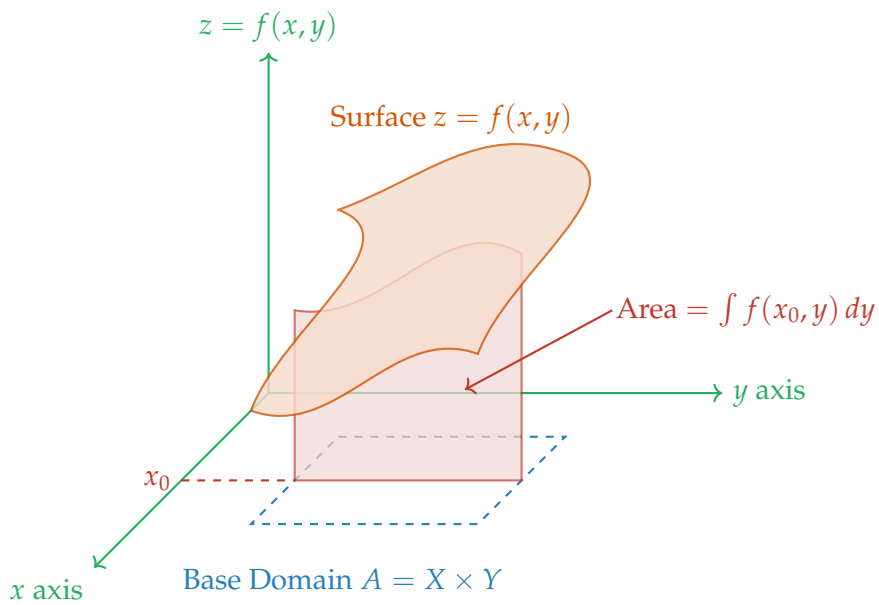

Explanation of Steps: The visual clarifies the core concept: the inner integral calculates the area of the 2D cross-sectional slice at a constant x_0. Fubini's Theorem simply states that integrating this varying 1D area function across the x-axis accumulates the full 3D volume (the hypograph).

Spoken Protocol [00:19:53 - 00:20:16]

Which again... So, this is similar to the theorem. And again, going to the picture, what what this tells me is that... This is the y, this is the x. Is that if you want to integrate a function over a body, you can integrate first for each x, you consider the slice of your body, and you can integrate over the slices, and then sum over all the slices.

Spoken Protocol [00:20:16 - 00:21:01]

This thing is integrating over the slices. And you will tell me, okay, maybe for some slices, if the integral is not well-defined, then just take the upper or the lower integral. You don't care. So, for most of the slices the integral will be defined, a posteriori. But if for some it's not defined, just take any, the upper or the lower integral. When you integrate over the slices, you sum over all the slices, you get the total integral of your function. And this will be very useful, and we will use next time to compute that integral over there that we left. Okay? You will see that with this observation, and we will prove a corollary that is very very nice to use, um, we can compute in one line that integral over there. Okay? But let me say one thing about the proof. The proof of this is just the same, you repeat almost line by line the proof that I gave for the for the Cavalieri Principle. Or if you want to be even smarter, what you can do is you can use the... So, you can take your function, you can decompose it into negative part and positive part. And remember that any integral is just a volume. It's just measuring a volume in one dimension more. So, what you can apply if you apply the Cavalieri Principle to the hypograph, so to the hypograph of this function F, you get exactly that. So, remember that any integral is just a volume of a hypograph. So, this is just the Cavalieri Principle applied to the hypograph of the function F when F is positive, or when F is negative. And then you decompose. Okay. So, we are going to use this next time.