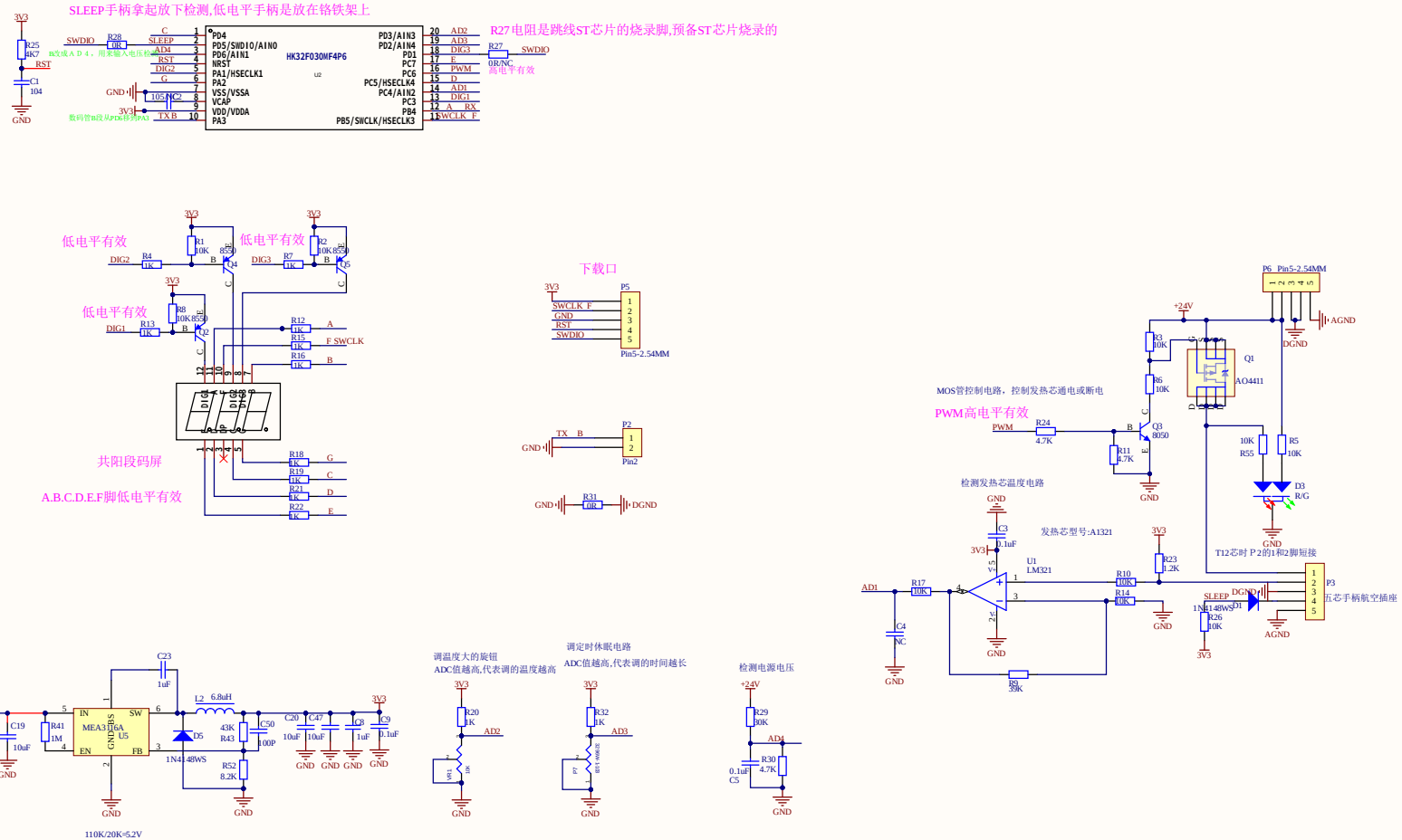


| Title | | |
|---|---|---|
| Size C | Number | Revision |
| Date: 3/09/2024 | | Sheet of |
| File: H:\ST-936\..\HK_936-V1.1.SchDoc | | Drawn By: |