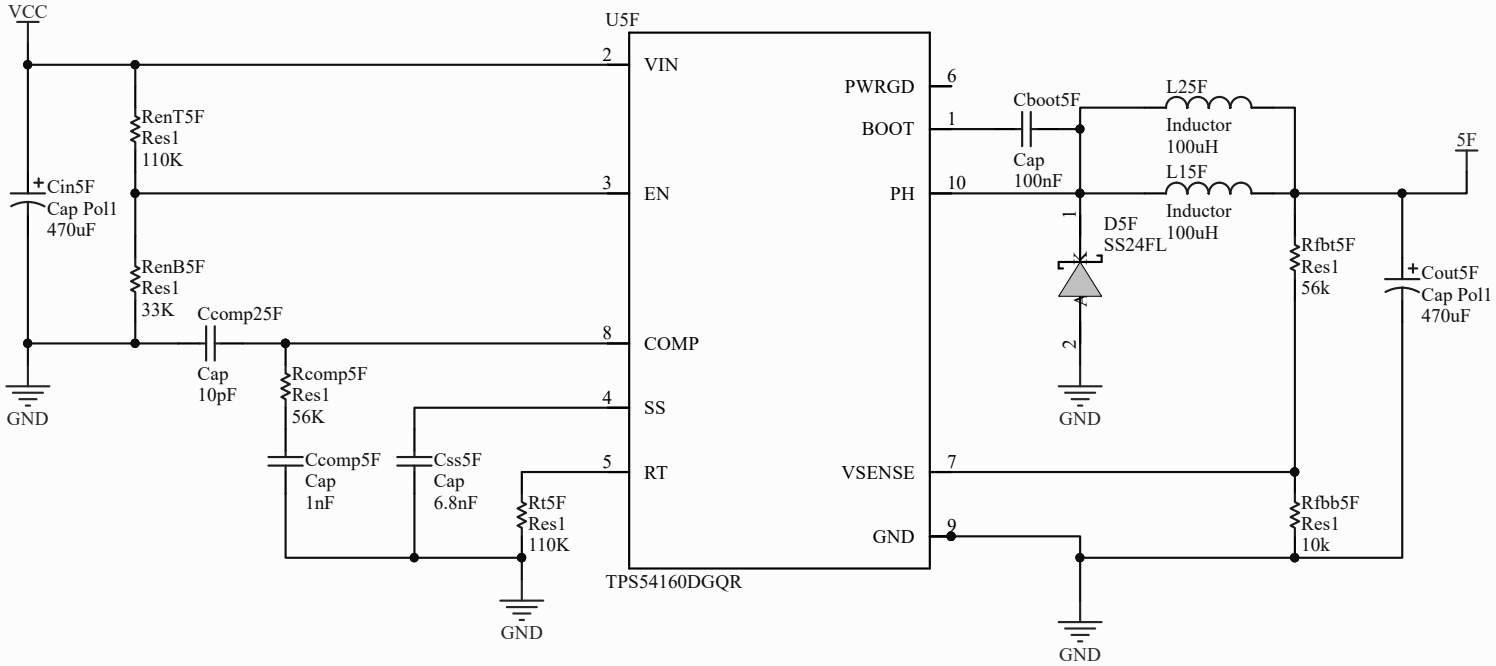

Title		
Size A	Number	Revision
Date: 8/29/2017		Sheet of
File: C:\Users\..\5F.SchDoc		Drawn By: