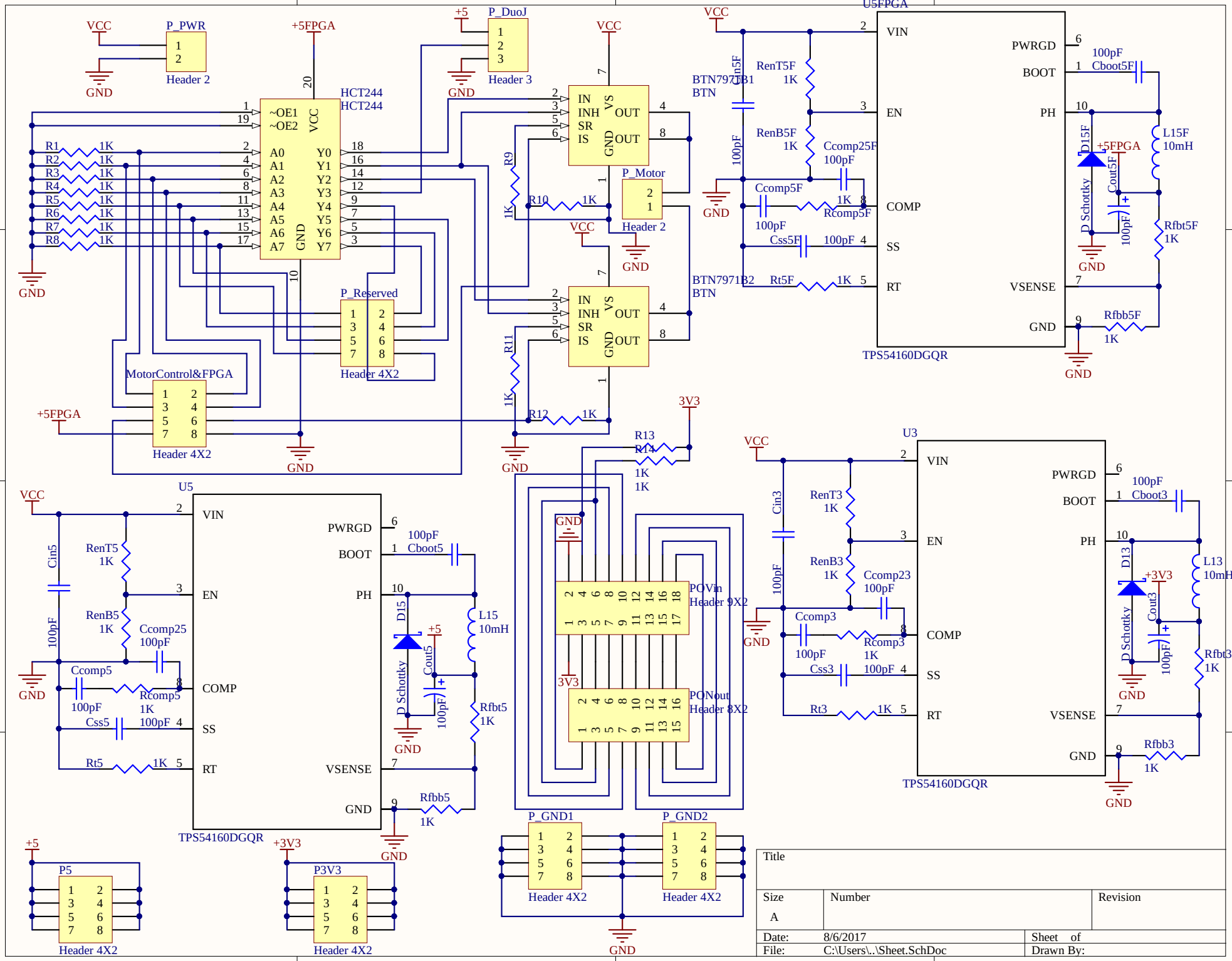
VCC
P_PWR
Header 2
GND
+5FPGA
HCT244
HCT244
~OE1
~OE2
VCC
A0
A1
A2
A3
A4
A5
A6
A7
GND
Y0
Y1
Y2
Y3
Y4
Y5
Y6
Y7
R1 1K
R2 1K
R3 1K
R4 1K
R5 1K
R6 1K
R7 1K
R8 1K
+5
P_DuoJ
Header 3
IN
INH
SR
IS
VS
OUT
OUT
GND
R9 1K
R10 1K
R11 1K
R12 1K
P_Motor
Header 2
P_Reserved
Header 4X2
MotorControl&FPGA
Header 4X2
3V3
R13 1K
R14 1K
U5FPGA
VIN
EN
COMP
SS
RT
PWRGD
BOOT
PH
VSENSE
GND
TPS54160DGQR
BTN7971B1
BTN
BTN7971B2
BTN
Cin5F 100pF
RenT5F 1K
RenB5F 1K
Ccomp25F 100pF
Ccomp5F 100pF
Rcomp5F 1K
Css5F 100pF
Rt5F 1K
Cboot5F 100pF
D15F
D Schottky
Cout5F 100pF
L15F 10mH
Rfbt5F 1K
Rfbb5F 1K
U5
Cin5 100pF
RenT5 1K
RenB5 1K
Ccomp25 100pF
Ccomp5 100pF
Rcomp5 1K
Css5 100pF
Rt5 1K
Cboot5 100pF
D15
D Schottky
Cout5 100pF
L15 10mH
Rfbt5 1K
Rfbb5 1K
POVin
Header 9X2
PONout
Header 8X2
P_GND1
Header 4X2
P_GND2
Header 4X2
U3
Cin3 100pF
RenT3 1K
RenB3 1K
Ccomp23 100pF
Ccomp3 100pF
Rcomp3 1K
Css3 100pF
Rt3 1K
Cboot3 100pF
D13
D Schottky
Cout3 100pF
L13 10mH
Rfbt3 1K
Rfbb3 1K
P5
Header 4X2
+3V3
P3V3
Header 4X2
Title
Size
A
Number
Revision
Date: 8/6/2017
Sheet of
File: C:\Users\..\Sheet.SchDoc
Drawn By: