Northeastern University
College of Engineering

Cornerstone of Engineering I & II
Fall 2021 MWH 11:45-1:25, 2:50-4:30

Zero Emission Energy

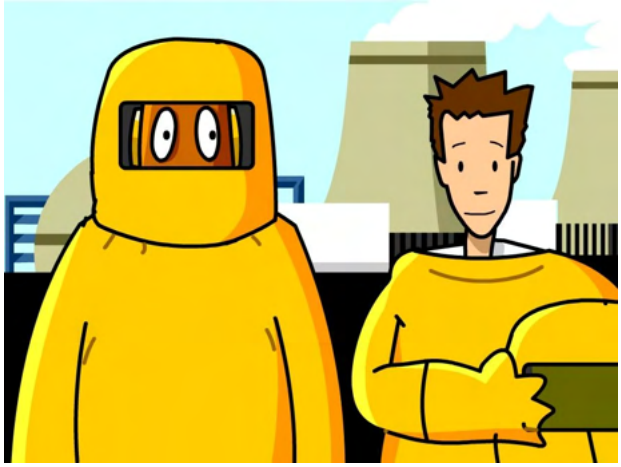

SUBMITTED BY:

Team 5: Podgemasters

PREPARED BY:

Nicholas Gorycki
Kathleen Tschoepe
Lauren Ward
Zeynep Ay

Report Submitted: **10 December 2021**

ABSTRACT

We aim to create a traveling museum exhibit that teaches high school and middle school age students the importance of sustainability in engineering. The client and users need an inclusive, accessible, transportable, and interactive design. The exhibit, when fully set up, must sit in a 36" wide by 28" deep tabletop, and it must be safe during both setup and transit. The total cost of the exhibit should be less than $100 when finally produced and, when in transit, must fit within the provided box.

Our solution is to design, create, and implement a museum exhibit that teaches children about nuclear energy as a sustainable and renewable energy source while destigmatizing its use. Additionally, we aim to teach children the difference in energy efficiency between nuclear energy, wind energy, and solar energy through game-based learning. To do so, we had the user produce as much power as they could in a limited time frame given the option between all three types of energy. This is simulated through three separate activities that represent each type of energy, and they can be played simultaneously throughout this time period. According to our feedback survey given to users following their interaction with our exhibit, the visitors rated their experience as a 9.125 out of 10, and 87.5% of users determined correctly that nuclear energy is the most efficient. These two data results reflect two of the main goals of our exhibit: to be interactive and to be educational. Therefore, we believe that our developed solution addressed the problem presented by the client.

Table of Contents

Abstract **2**

Table of Contents **2**

List of Figures **9**

Zeynep Ay **12**

Introduction 12

Problem Statement 12

Stakeholders 12

Pertinent topics in engineering 12

Scope 13

Background 14

Research 14

Existing Market 14

Industry Guidelines 14

Best Practices & Success 14

Exhibit Topics 15

Additional Research 15

Ethics 16

Universal Design 16

Methodology 17

Defining The Problem 17

Generate Solutions 17

Deciding Course of Action 18

Implement Solution 18

Refining/Optimizing 19

Prototype 19

Classmates Feedback 20

Implement Solution 20

Pre-Construction Planning 20

Construction 21

Coding 22

Hardware 22
Classmates Feedback 23
Further Evaluation of Solution 23
Re-Analyzing Design 23
Coding 23
Hardware 24
Aesthetics 24
Individual Contributions 25
Milestone #1 25
Milestone #2 25
Milestone #3 25
Milestone #4 25
Milestone #5 26

Nicholas Gorycki 27
Introduction 27
Problem Statement 27
Stakeholders 27
Scope 28
Background 29
History of the Problem 29
Research 29
Ethics 29
Methodology 31
Team Contract 31
Defining the Problem 31
Generating Solutions 32
Decision-Making 33
Implementing the Solution 34
Evaluating the Solution 37
Individual Contributions 37

Kathleen Tschoepe 39
Introduction 39
Problem Statement 39

Stakeholders 39
Pertinent Topics in Engineering 39
Scope 40
Background 41
Research 41
Ethics 42
Universal and EDGE Design 42
Methodology 43
Team Contract 43
Define the Problem 43
Generate Solutions 44
Decide the Course of Action 46
Implement the Solution 47
Evaluate the Solution 51
Individual Contributions 51

Lauren Ward 53
Introduction 53
Problem Statement 53
Stakeholders 53
Pertinent Topics in Engineering 53
Scope 54
Background 55
Research 55
Methodology 56
Team Contract 56
Defining the Problem 56
Alternate Solutions 57
Decision Making 59
Implementation of Design 59
Final Design 63
Evaluation of Design 64
Individual Contributions 64

Podge Masters 68

Final Design 68
Nuclear Energy 68
Wind Energy 69
Solar Energy 70
Code and GUI 71
Wiring 72
Poster 73
Results 74
Performance 74
Feedback 74
Comparisons 75

Zeynep Ay 76
Discussion/Analysis 76
Results 76
Strengths 76
Weaknesses 76
Overall Review 76
Conclusion 77
Results 77
Challenges 77
Concluding Remarks 77
Recommendations 79
Intellectual Blocks 79
Regrets & what I would do different 79
Recommendations 79
Lessons Learned 80
Contributions 80
Milestone #5 80
Milestone #6 80
Resources 81
Reflections on Learning 81

Nicholas Gorycki 82
Discussion 82

Strengths 82
Weaknesses 82
Conclusion 84
Challenges 84
Remarks 85
Recommendations 86
Clarity of Instructions 86
Research on Potential Components 86
Further development 86
Lessons Learned 87
Individual Contributions 87
Resources 87
Reflections on Learning 88
Reflections on Working in a Team 88

Kathleen Tschoepe 90
Discussion 90
Conclusion 91
Recommendations 92
Lessons Learned 93
Contributions 93
Resources 94
Reflections on Learning 94
Reflections on Working in a Team 94

Lauren Ward 95
Discussion 95
Conclusion 96
Recommendations 97
Lessons Learned 98
Reflections on Working in a Team 98

Works Cited 100

Author Biographies 102

Appendices 104

Appendix A – Team Contract 104
Appendix B - Decision Analysis 110
Appendix C - Final AutoCAD/Solidworks Drawings 111
Appendix D – Product Testing Results 117
Appendix E – Code Used in Project 118
GUI 132
Actively playing screen 133
Final screen 133
Appendix F – Wire Diagrams for SparkFun Boards 134
Appendix G – Photo Log 135
Appendix H – Final Gantt Chart 150
Appendix I – Final Budget 151

List of Figures

Fig. 1. Capacity Factor by Energy Source in 2020 15

Fig. 2. Slant Surface Angles 16

Fig. 3. Microplastic Extraction Exhibit Sketch by Lauren Ward 17, 33, 45, 58

Fig. 4. Nuclear Seawater Extraction Exhibit Sketch by Nick Gorycki 17, 33, 45, 58

Fig. 5. Regional Climate Change Exhibit Sketch by Katie Tschoepe 18, 33, 45, 58

Fig. 6. Stormwater Management Exhibit Sketch by Zeynep Ay 18, 33, 45, 58

Fig. 7. Optimized Sketch 19

Fig. 8. Cardboard Prototype – Nuclear Portion, Front 19, 35, 47, 60

Fig. 9. Cardboard Prototype – Wind Portion, Front 19, 52

Fig. 10. Cardboard Prototype Orthogonal Sketch 19, 34, 47, 60

Fig. 11. Pre-Construction Design Recommendation by Carrie Tam 20, 60

Fig. 12. Pre-Construction Design Brainstorming Sketch by Zeynep Ay 20

Fig. 13. New Exhibit SOLIDWORKS Orthogonal Sketch 20, 35, 61

Fig. 14. Wind Component AutoCAD Sketch 21, 48, 61, 65, 69

Fig. 15. Wind Energy Wheel 21, 66

Fig. 16. Solar Energy Button SOLIDWORKS 21, 70, 80

Fig. 17. Solar Energy Button 21

Fig. 18. 60% of Construction 22, 36, 49, 61

Fig. 19. Solar Energy Flowchart 22

Fig. 20. Nuclear Energy Flowchart 22

Fig. 21. Wire Diagram 23

Fig. 22. GUI Draft #1 24

Fig. 23. Wood Prototype of Exhibit with Color 24, 36, 50, 63

Fig. 24. Nuclear Energy Lever system 24, 69, 77, 83

Fig. 25. Solar and Nuclear Components AutoCAD Sketch 24, 48, 61, 65, 69

Fig. 26. First Planned Trifold Design by Katie Tschoepe 25, 62

Fig. 27. Final Trifold Design 25

Fig. 28. New Exhibit Design SOLIDWORKS Model 48, 74

Fig. 29. LED Acrylic Pieces AutoCAD Sketch 49, 92

Fig. 30. 3D-Printed Wind Component Handle 50, 62, 69

Fig. 31. Final Exhibit at the Museum of Science 51, 64, 73

Fig. 32. Wind Component Handle SOLIDWORKS Orthogonal Sketch 52, 93

Fig. 33. LED Strip and Acrylic Holder AutoCAD Sketch 52, 93

Fig. 34. Wiring of Wind Exhibit 63

Fig. 35. Painted Solar Panel on Solar Energy Exhibit Component 66

Fig. 36. Painted Sun with LEDs on Solar Energy Exhibit Component 67

Fig. 37. Final Wind Component 70

Fig. 38. Final Solar Component 71

Fig. 39. LED Solder Work 72

Fig. 40. Button Solder Work 72

Fig. 41. Solar Randomized Sun LED Code 85

Fig. 42. Nuclear Exhibit Magnetic Marble Extraction Piece 87

Fig. 43. Museum Exhibit Components inside Transport Container 90

Zeynep Ay

1.1 Introduction

Problem Statement

For this project, we aimed to create a traveling museum exhibit that teaches students ages 10-18 the global impact of sustainable efforts. This is important as some kids cannot travel to museum exhibits, and all should understand the impact of sustainability. Users need an inclusive, accessible, transportable, and interactive design. Our solution is to create an exhibit that teaches children about nuclear energy as a renewable energy source while destigmatizing its use. We also aim to teach children the difference in energy between a Gigawatt, Megawatt, and Kilowatt. The exhibit, when set up, must sit in a 36" wide by 28" deep tabletop, and it must be safe during both setup and transit. The design must include educational text concisely yet thoroughly explaining the concept, and it must automatically reset. The total cost of the exhibit should be less than $100 when finally produced and, when in transit, must fit within the provided box.

Stakeholders

Our stakeholders primarily were our clients as well as our users. Our clients, the Museum of Science Boston, requested an engaging exhibit that could be accessible to all users regardless of constraints (poor eyesight, etc.), appealing to all users (male, female, or nonbinary), taught the users a new aspect of sustainability, and was fun for all users.

The Staff of the Museum of Science, Boston showed our team examples of what makes a good, accessible museum exhibit by giving guidelines to follow, and examples from the Museum of Science itself. This was all made possible thanks to our team's Professor, Professor Kathryn Schulte-Grahame of the Northeastern University College of Engineering, who created the guidelines for this project and made this project possible.

Our primary users were children between the age of 10 – 18, although there were many users who fell outside of this age range. Many parents and adults also took a liking to the exhibit, as well as many young children between the ages of 4 – 7. Therefore, it is fair to say that our users were all visitors of the Museum of Science Boston.

Pertinent topics in engineering

The focus of the project was to teach children about sustainability. According to the UN World Commission on Environment and Development, sustainability is "development that meets the needs of the present without compromising the ability of future generations to meet their own needs." [16]. This is an especially important subject to teach children, as a sustainable future directly affects them and their lives. It is agreed upon that a sustainable future is one that allows society to sustain while also sustaining the future generation's ability to flourish. One way to achieve a sustainable future is to implement energy sources/fuels that do not produce emissions that pollute our planet and our atmosphere. Emissions of greenhouse gasses from the burning of fossil fuels are linked to climate change, which in extreme circumstances can cause our earth to become inhabitable for future generations. Energy/fuel sources that do not produce emission pollution are known as Zero Emission

Energies, which is the focus of our project. For our project, we focused on 3 different zero emission energy sources: wind, solar, and nuclear. Although our project did go over all 3 sources of energy, the main goal of the project was to focus specifically on nuclear energy.

Wind energy implements the use of wind to produce mechanical energy end electricity. The energy is produced with the use of wind turbines. The kinetic energy created with the spin of the wind turbines can be extracted and used. [16]

Solar Energy harnesses sunlight and converts into thermal or electric energy. This is done using Photovoltaics, which capture the solar energy and convert it to electricity. [17]

Nuclear energy, at its base, is the energy in the nucleus. We can extract nuclear energy by splitting these atoms in a process known as nuclear fission. Uranium is the most common element this is done with. The use of uranium enables there to be no emissions, unlike fossil fuels. [20] In recent days, nuclear energy has gotten a lot of backlashes by the media and by the public. This can be attributed to many historic nuclear plant meltdowns, such as the Chernobyl Accident of 1986. Although this may be the case, compared to Wind and Solar energy, nuclear energy is far more efficient than either. Regardless of the controversy, many countries still use nuclear energy with little to no meltdowns, most notably France. A major goal of our project was to destigmatize the negative connotation the public and the media have towards nuclear energy.

Scope

This technical report spans all aspects of the Engineering Design Process used to complete our project, and will display all relevant designs created in SolidWorks, AutoCAD, TinkerCAD, Matlab, Arduino, and Matlab App Designer. The budget for our project was limited to $100 USD. Before spending any money, our group had access to 4 spark fun kits which provided us with most of the necessary electrical components. These were not accounted for in our budget. We began buying necessary materials (acrylic, wood, hinges, nails, etc), and slowly progressed to using the remainder of the budget on smaller utilities (magnets, other electrical components, etc.).

1.2 Background

Before beginning our project, our team explored all the necessary elements which must be implemented into our project to ensure an accurate and accessible museum exhibit. These elements can be divided into 3 categories: Research, Ethics, and Universal Design.

- **Research**

Our team's 1st milestone involved researching 3 topics: The Existing Market of Museum Exhibits, The Industry

Guidelines of Museum Exhibits, The Best Practices of Museum Exhibits, and possible Exhibit Topics. These topics were researched independently and then discussed within our group.

Existing Market

To properly build a museum exhibit, first our group must investigate the general market of museum exhibits. This enabled us to get inspiration for our own museum exhibit, as well as what we should pay attention to implementing before our final design. This investigation was conducted by conducting research via the Northeastern Library Online Database(s), as well as visiting/touring the Museum of Science, Boston. Our research found that Museums today are moving towards being accessible and engaging to everyone. For those who are handicapped, some museums have an app where one can plan a route before they arrive which includes elevators, areas with different lighting, audio guides, and more to make their experience as enjoyable as possible. [9] Another represented group are those who are blind as museums are working with technology to create 3D printed models of exhibits and are providing small, guided tours so they can experience the museum in their own way. [18]. There is also a focus in some museums for exhibits to be more engaging for girls in STEM or children interested in learning something new. Since females visit science-based museums less frequently than their male counterparts, some museums have begun to adjust their exhibits to appeal to female visitors. This can be done by creating a low-pressure setting, representing females and their interests (i.e. characters in movies that are more popular with women), open-ended exhibits with multiple outcomes, etc. All these guidelines can be compiled into what is known as EDGE design [19].

Industry Guidelines

To make a proper museum exhibit, another element our group had to keep in mind was the guidelines for the museum exhibit industry. In the current industry, interactive museum exhibits have become a standard, and as a result many scientific institutions have created guidelines for effective exhibit creation, considering all aspects of design. Outlining the most important aspects of accessibility and effectiveness, these guidelines provide in-depth insight into the best practices in design ranging from text formatting to exhibit dimensions. Using all these resources, the creation of our exhibit provided a universally effective experience for the audience. [2]

Best Practices & Success

To make a successful museum exhibit, our group must first observe what makes other museums successful and what the overall best practices are. Our research indicated that modern science museum exhibits are becoming more project and game-based, which have been more successful in teaching children's new skills. In project-based learning, students solve real-world problems, reinforcing the idea that they can solve and address larger issues with a diverse group of experiences and ideas. [9] In children's science exhibits, new focus is drawn towards signs that ask children questions throughout the exhibit to strengthen the development of their scientific reasoning. A successful museum exhibit promoting sustainability will reinforce the audience's problem-solving skills by allowing them to address real-world issues in the field. [8].

Exhibit Topics

In a time where sustainability is constantly adapting and changing, there are a variety of practices and systems that are slowly on the rise and being pushed to be

implemented in everyday life. It is our job, as the producers of this museum exhibit, to choose topics that will teach the children something new, without the subject being too complicated or too simple. As a result, our team decided to research some possible exhibit topics that were popular at other museum exhibits before diving into idea generation. This way, we as a team could familiarize ourselves with some topics that were appropriate for our intended age group. One topic is the implementation of stormwater management systems. When it rains, the water that goes down our drains collects many pollutants before going down sewage drains. This water is also known as runoff water, and can carry with it liquid fluid excess, and other harmful chemicals. Because the U.S. does not (in most states) have a proper stormwater management plan or system, most of this polluted water eventually ends up in our drinking water. Through these systems, the toxic chemicals that end up in public drains due to stormwater can be filtered out. [12] Another practice is upcycling plastic bottles into "eco-bricks" to reduce plastic pollution. Only 12% of our plastic water bottles are recycled. Due to the fact recycling has become an ineffective way to reduce waste, upcycling has become wildly popular in recent years. A popular form of upcycling that can be applied to a variety of projects is using old plastic water bottles to create bricks that can be used in industry. [15] And lastly, a newer form of sustainable energy is the waste-to-energy system, which takes (combustible) waste and turns it into energy through heating up the waste and using its steam to create energy. Discovering these topics enabled us to understand what museums want to teach children about sustainable energy, and the capacity to learn for our intended age group.

Additional Research

Once our team had decided to work with Zero emission energy as our exhibit's topic, our team researched what the exact differences were in efficiency between Nuclear, Wind, and Solar energy (Fig. 1).

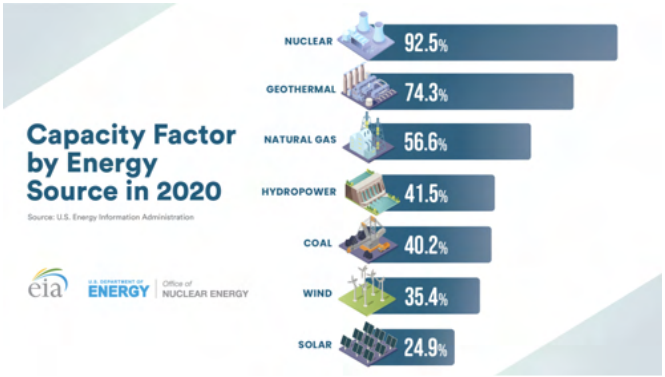

Fig. 1. Capacity Factor by Energy Source in 2020. [20]

Our team found that for nuclear, 0.024 GigaWatts (GWh) of energy (in the form of fuel) can be produced per 1g of uranium. In contrast, 0.000402 GWh of energy can be produced for one wind turbine in an hour, and 0.000004 GWh for one solar panel in the sunlight for an hour. As a result, nuclear energy was found to be the most efficient energy source, wind being the second most efficient, and solar being the least efficient.

Ethics

As engineers, we use science and technology to solve problems with the overall goal to benefit our society. As a result, our group aimed to display an issue that requires both science and technology and is related to sustainability. The topic for our museum exhibit, zero emission energy, uses both science and technology to find alternative sustainable energy sources to combat climate change and limit emission pollution. Beyond this, air pollution can also be extremely toxic to one's health. Many

studies show that long-term effects of air pollution include heart disease, lung cancer, and respiratory diseases such as emphysema. Air pollution can also cause long-term damage to people's nerves, brain, kidneys, liver, and other organs [16]. This is an especially important topic to teach children, as emission pollution and climate change will have significant implications on their lives if more sustainable energy sources are not implemented. Therefore, zero emission energy sources benefit not only current day society, but also benefit our future.

Universal Design

To ensure that all museum visitors could interact with our exhibit, our team followed the Museum of Sciences universal design plan and implemented some elements. The Universal design plan emphasizes on the ability for visitors to physically interact with/perceive the space, cognitively engage with the materials, and socially interact with one another. For example, the Museum of Science, Boston recommends the following angles for various applications (Fig. 2):

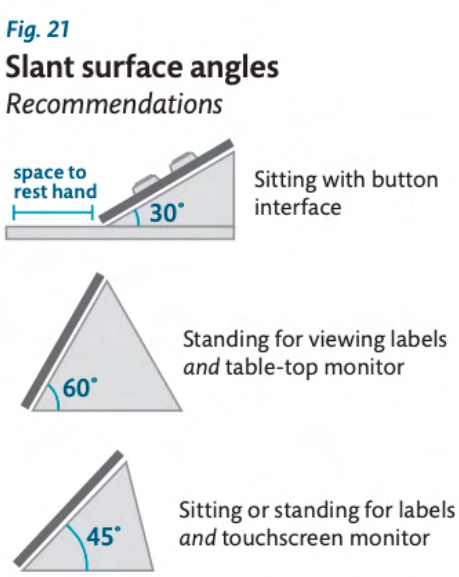

Fig. 2. Slant Surface Angles. [21]

These recommended angles were incorporated into our own museum exhibit. Universal design also encompasses EDGE design to appeal to female museum visitors just as much as male museum visitors.

1.3 Methodology

The engineering design process has 5 steps: Defining the problem, generating solutions, deciding course of action, implementing the solution, and evaluating the solution. These were the steps our team followed while working on our museum exhibit.

Defining The Problem

To define the problem at hand, first our team had to question who our stakeholders were. As mentioned beforehand, our clients for the product were the Museum of Science, Boston and our clients for the final report was our Professor, Kathryn Schulte-Grahame and her future students. Our users would be children between the ages of 10 – 18. We as a team also made sure to write our problem statement by addressing the real problem at hand. This was done by focusing on objectives/constraints, not a

misdirected search. Our objectives were to make an informative museum exhibit for children that teaches a topic of sustainability, our constraint was our budget, the size of our bin, time, and transportability. We also made sure to answer the 3 W's: What is the issue, who has the problem/need, and why is the issue worth anyone's attention. To answer these questions, we found the issue to be the bad stigma surrounding nuclear energy as well as the excess air pollution created by some forms of energy (I.e., fossil fuels), the people who have the problem or need is all of us as a society (specifically future generation as they will have to deal with the consequences of climate change), and the issue is worth attention since it will affect our future generations and possibly make this planet inhabitable.

Generate Solutions

For Milestone 2, our team had to generate some possible museum exhibit topics. Our team used the gallery method to generate different solutions. When generating different solutions, I personally made sure to keep in mind perception blocks, unnecessarily limiting the problem, intellectual blocks, and expressive blocks. Our time limit was 2 days, and we met as a team to display our ideas and to discuss/critique each idea independently. Firstly, we discussed and critiqued Lauren Ward's idea, which had to do with microplastics (Fig. 3):

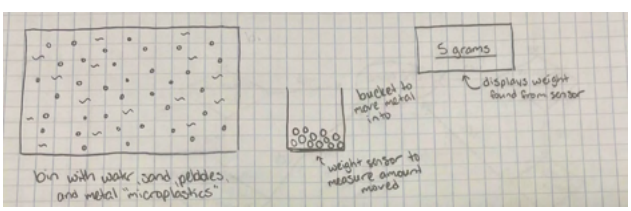

Fig. 3. Microplastic Extraction Exhibit Sketch by Lauren Ward

Secondly, we discussed Nicholas Gorycki's idea, which had to do with Nuclear Seawater Extraction (Fig. 4.

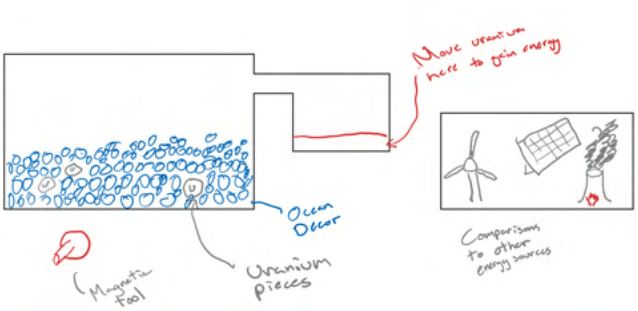

Fig. 4. Nuclear Seawater Extraction Exhibit Sketch by Nick Gorycki

Thirdly, we discussed Kathleen Tschoepe's idea, which had to do with the effects of climate change to each region of the U.S (Fig. 5).

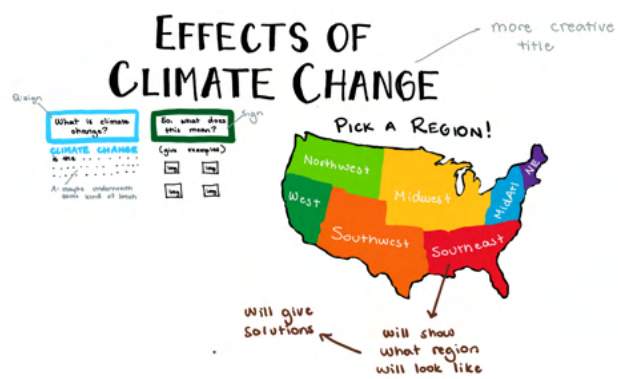

Fig. 5. Regional Climate Change Exhibit Sketch by Katie Tschoepe

Lastly, we discussed my idea, which had to do with Stormwater Treatment with the goal of teaching children the importance of managing stormwater (Fig. 6):

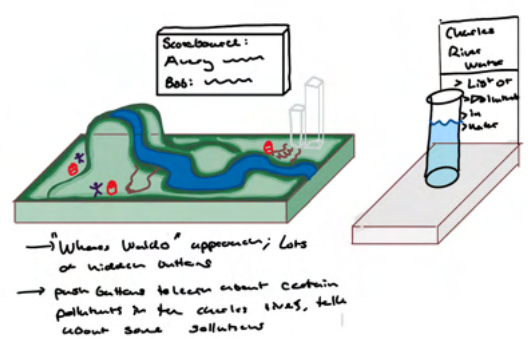

Fig. 6. Stormwater Management Exhibit Sketch by Zeynep Ay

This was done by incorporating hidden buttons that highlighted various pollutants to the Charles River. The

more buttons that were found, the higher the child's score. The open-endedness of the design would ensure that children could also work in teams to find the buttons, while also learning about the importance of stormwater management. To the right of the exhibit, there would also be a glass of water from the Charles River, as well as a breakdown of the individual pollutants. Some of the interactive elements of this design were implemented further into the final design, specifically the loosely multiplayer aspect.

Deciding Course of Action

For Milestone 2, our team also had to decide on the best idea and the idea our team would pursue. To be able to decide on which idea would be the best moving forward, our group made a Kepner-Tregoe Diagram. Eventually, we decided to proceed with Gorycki's idea due to the fact it was the most transportable, most educational, and most interactive. It also was a subject that was not too complex for children to understand since most were, at least to some degree, familiar with nuclear energy, but wasn't too simple since it added the additional element of seawater extraction. This, however, was not our final idea since our idea was further modified throughout the project. Once our team had completed the Kepner-Tregoe diagram, we met with our mentor, Carrie Tam, and worked through the Kepner Tregoe diagram with her. She agreed that the Seawater Extraction exhibit would be the most suitable and favorable course of action.

Implement Solution

For Milestone 3 our team had to implement our solution. This was done by refining and optimizing our solution, and then creating a prototype out of cardboard. These prototypes were then displayed to the rest of the class and received critiques and recommendations from the rest of our classmates and our professor.

Refining/Optimizing

Before executing Gorycki's original sketch, our team first had to refine and optimize the idea (Fig. 7), specifically to make sure the museum exhibit could be reset. This was done by implementing a spinning turbine at the bottom of the case which could shuffle the marbles and had a function where the dropped marbles could be returned to inside the gravel area. For the wind turbine section, our team also decided it would be best to implement a wheel design that could be spun to simulate the production of wind energy.

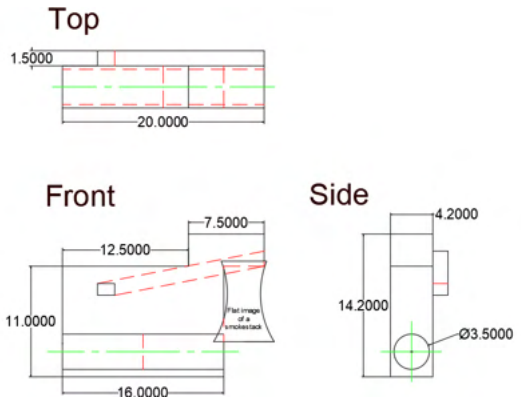

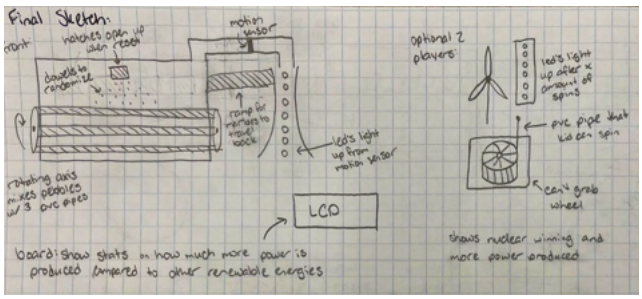

Fig. 7. Optimized Sketch

Prototype

Our team's prototype was constructed with cardboard (Figs. 8-10) and had some major functions working, such as the reset ability and the resetting turbine. This was the first embodiment of the design and was held as a reference as we moved forward in the project. The prototype enabled us to understand if the final design was executable, as well as functional. Once our cardboard prototype was complete, it was presented to our professor alongside our Cornerstone classmates for critiques and recommendations. My personal contribution was the construction of the prototype and optimizing the sketch with my teammates.

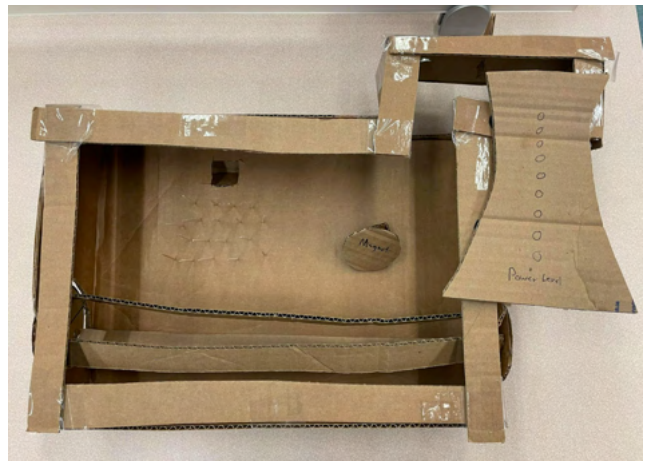

Fig. 8. Cardboard Prototype – Nuclear Portion, Front.

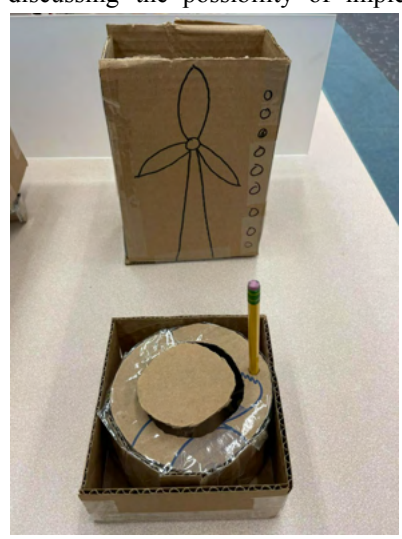

Fig. 9. Cardboard Prototype – Wind Portion, Front.

Fig. 10. Cardboard Prototype's Orthogonal Sketch

Classmates Feedback

After presenting our prototype to the rest of our classmates, the consensus was positive, however there were some notable critiques. One critique was from a classmate of ours who encouraged us to implement a theme. A theme was not implemented into our exhibit until much later in the process, however this comment did have our team discussing the possibility of implementing a theme. Another notable comment was from our professor, who emphasized that our wind and nuclear portions felt like two separate exhibits. We kept this comment heavily in mind for the next milestone.

Implement Solution

For our final step in the Engineering Design Process our team was challenged to implement our solution. In Milestone 4, this was done by completing 60% of the necessary construction of our exhibit, alongside a large majority of the coding and hardware. This was the milestone where I was the project manager, and my

contributions largely included doing the hardware, coding, and proof of concept, as well as presenting our exhibit to the class.

Pre-Construction Planning

Based on the comments we had received from our Classmates and professor the following week; our team decided to revisit our sketch and adjust it according to the comments we received (Figs. 11-13). After meeting with our mentor Carrie Tam, we decided to take out the seawater extraction element of the nuclear energy portion and decided to add in solar energy as a third form of zero emission energy per her recommendation. We also decided to add in a 45-degree slant to the exhibit [2] as recommended by the Museum of Science, Boston.

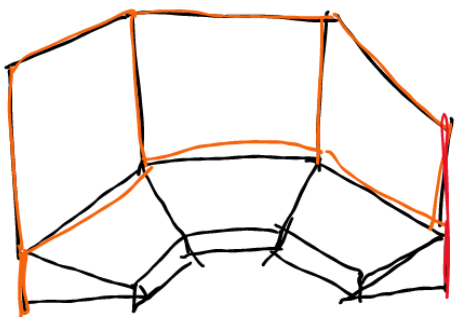

Fig. 11. Pre-Construction Design Recommendation by Carrie Tam

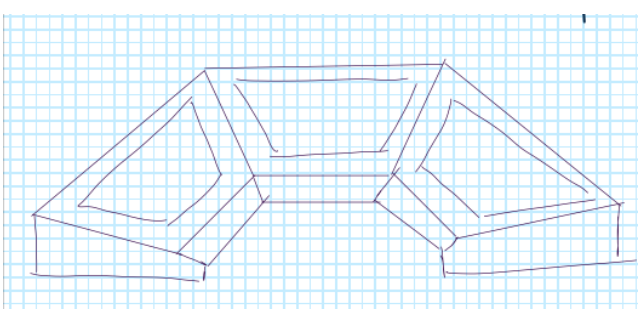

Fig. 12. Pre-Construction Design Brainstorming Sketch by Zeynep Ay

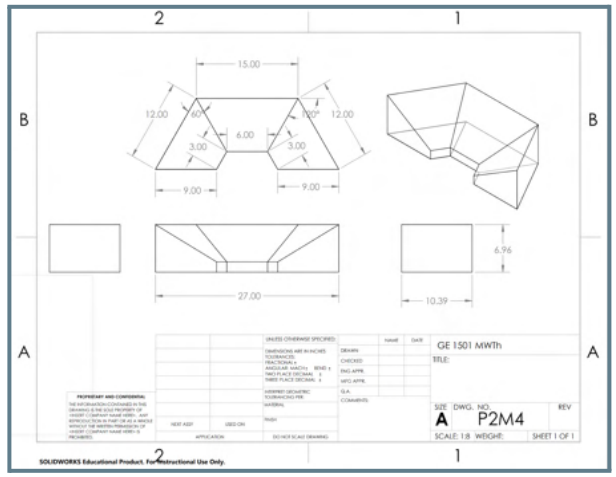

Fig. 13. Pre-Construction SolidWORKs Model

Construction

Our milestone required us to have 60% of the physical exhibit constructed (Fig. 18). This was done by making most of the base of the exhibit and some of the interactive pieces, alongside some decorative pieces. The interactive pieces included the wind energy wheel (Figs. 14-15) and the solar energy button.

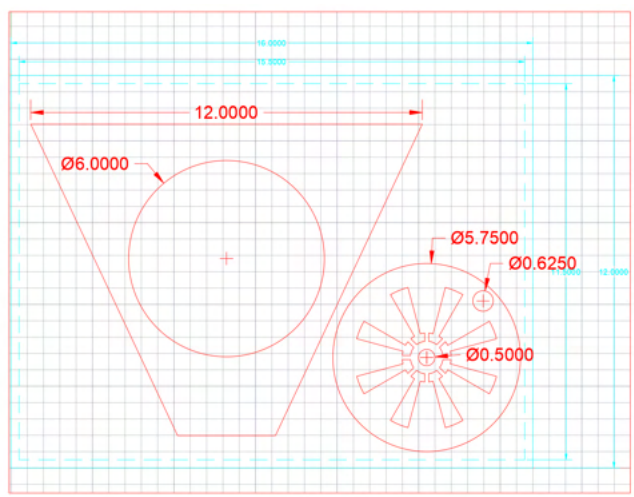

Fig. 14. Wind Component AutoCAD Sketch

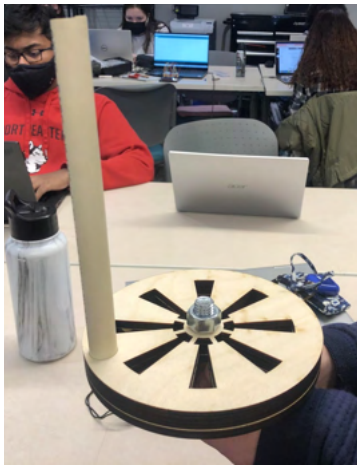

Fig. 15. Wind Energy Wheel

For this milestone, each team member had to 3-D print a piece that would be useful to the exhibit. These prints were done through the First Year Engineering Center (FYELIC) at Northeastern University. My personal 3-D printed piece was the solar energy button (Figs. 16-17), which was later reprinted with a different design, size, and color to better fit the exhibit. Katie's 3-D printed piece was the knob for the wind energy portion of the exhibit, Nick 3-D printed the magnet holder for the nuclear portion of the exhibit, and Lauren 3-D printed a LCD screen border.

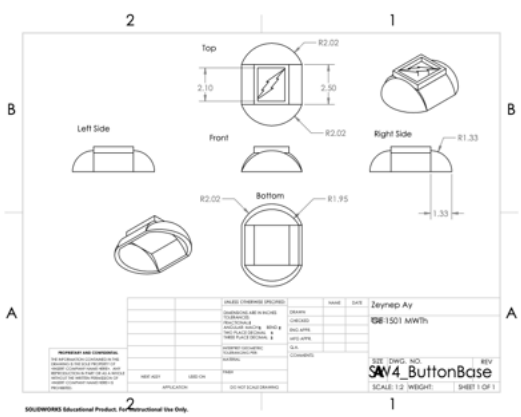

Fig. 16. Solar Energy Button SolidWORKS

Fig. 17. Solar Energy Button

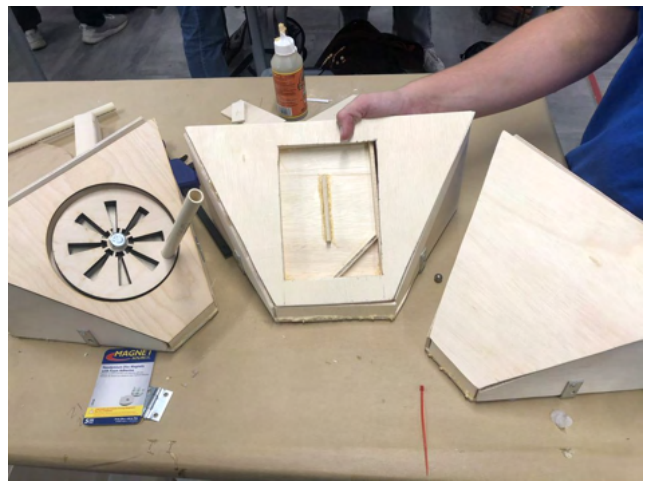

Fig. 18. 60% of Construction

Coding

I was heavily involved with the coding portion of the exhibit. First, our team met and discussed what exactly we wanted the user experience to be in the exhibit, and we all agreed that the overall experience should be game based, with still a heavy educational aspect. We decided that it

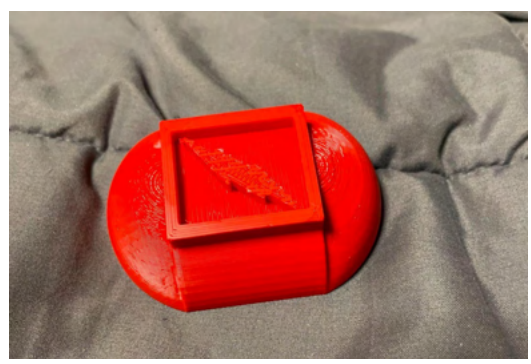

would be best to have the user first interact with the nuclear portion of the exhibit (Fig. 20), then the wind portion of the exhibit, and then the solar portion of the exhibit (Fig. 19). As the user runs through each section, the amount of energy produced would be displayed. Since the

amount of energy produced with nuclear would be substantially higher than the amount of energy produced by the wind and solar portions of the exhibit, this would convey to the user that nuclear is far more efficient while also destigmatizing the notion towards nuclear energy. The first original code was first written in Arduino.

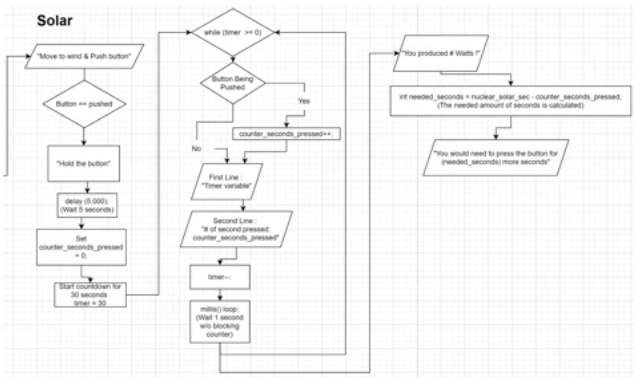

Fig. 19. Solar Energy Flowchart

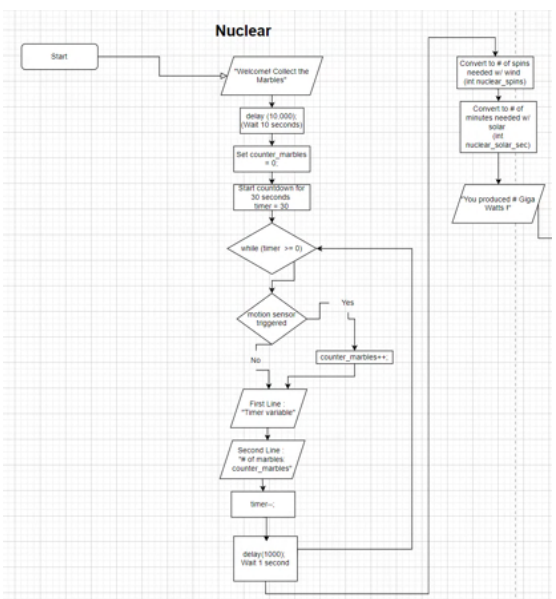

Fig. 20. Nuclear Energy Flowchart

Hardware

The hardware portion of the exhibit follows the wire diagram (Fig. 21) and includes a hall effect sensor (a sensor that detects magnets), an ultrasonic distance sensor, an LCD screen, and a pushbutton.

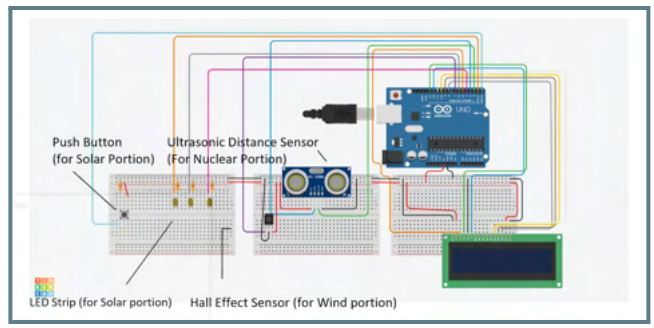

Fig. 21. Wire Diagram

The hardware was tested with the code and was found to be working as intended. The proof of concept was then recorded and published onto YouTube at https://www.youtube.com/watch?v=g2WSbcnKPYo .

Classmates Feedback

After presenting our new design, 60% complete physical body and proof of concept to our classmates, the consensus was positive, however there were some notable critiques. Once again, a classmate encouraged us to implement a theme. Another notable comment was from our professor, who felt as though our game lacked a goal. We kept this comment heavily in mind for the next milestone.

Further Evaluation of Solution

For Milestone 5, our team had to complete the museum exhibit to be 90% complete (Fig. 24). This included re-analyzing the design, soldering the hardware, and

adapting the code. Milestone 6 included finalizing the GUI, finishing aesthetics, and creating the posterboard.

Re-Analyzing Design

Before continuing to work on the exhibit to 90% completion, our team met with our mentor, Carrie Tam, to discuss what we should adapt. Based on the feedback received from our classmates and professor, as well as advice from our mentor, we decided to make it so all components could be interacted with simultaneously with the goal of creating enough energy to power the city of Boston, Massachusetts. This was done by lighting up familiar landmarks in the Boston area with LED strips once the children had reached a certain energy threshold. The easiest threshold to achieve was Northeastern University, then Fenway, followed by Northend , Cambridge, and finally Boston. Since the fastest way to light up all the way to Boston is to use the nuclear energy portion of the exhibit, the hope is that the users will identify nuclear energy as being the most efficient energy source.

Coding

The original Arduino code was rewritten into Matlab to perform the same functionality, but this time with the program constantly running rather than it running synchronously. Eventually, it was further edited into a Game User Interface (GUI) with MatLab App Designer. This first GUI was my contribution to the group (Fig. 23). This made us discard the LCD screen from our design.

Fig. 22. GUI Draft #1

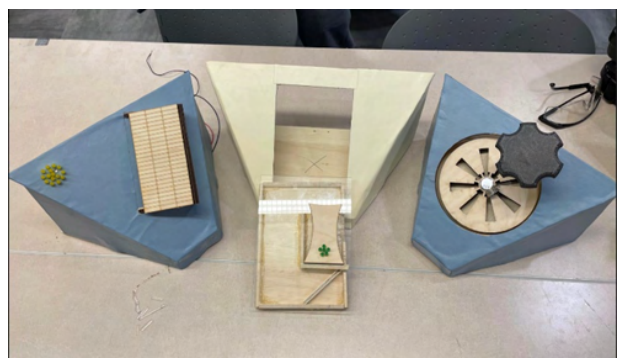

Fig. 23. Wood Prototype of Exhibit with Color

Hardware

For Milestones 5 and 6, the hardware was soldered so that each individual piece could have more range to where it was being placed. The LED strips were also soldered to be able to do the same thing. There were major complications with the metal marbles in the nuclear portion of the exhibit however, as the distance sensor was intended to count the marbles as they fell. After much speculation, we realized that the signal sent out by the distance sensor was being interrupted due to the circular shape of the metal marble. This made it necessary for us to implement a lever system to count the marbles (Fig. 24).

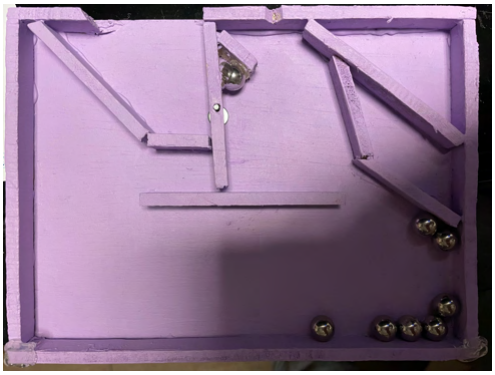

Fig. 24. Nuclear Energy Lever system

Aesthetics

The last element my team and I focused on was the aesthetics of our museum exhibit. This was done by completing the painting, laser cutting the acrylic pieces of the different locations (Fig. 25), and completing the posterboard (Figs. 26-27).

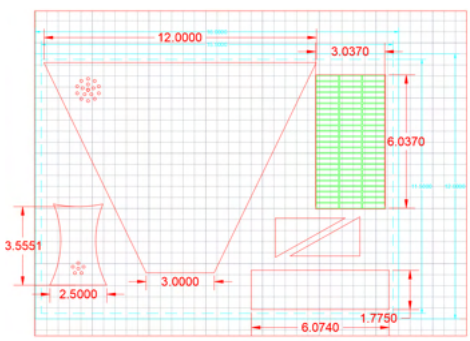

Fig. 25 Solar and Nuclear Components AutoCAD Sketch.

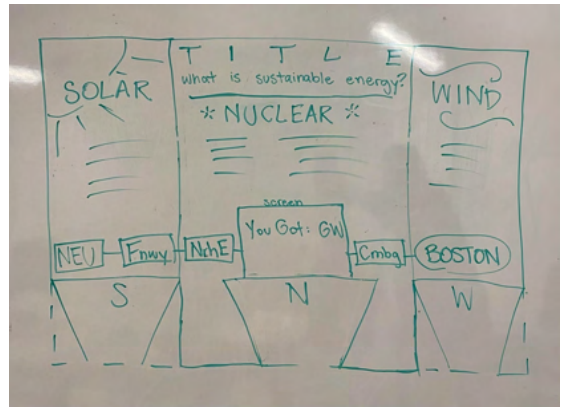

Fig. 26. First Planned Trifold Design by Katie Tschoepe

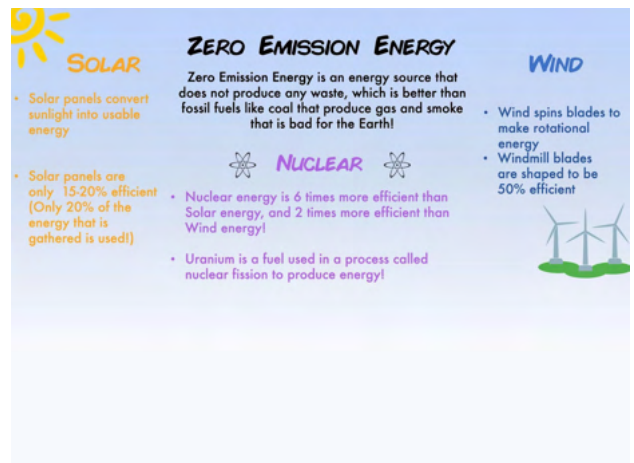

Fig. 27. Final Trifold Design

Once this was all finalized, we presented our exhibit first to the students at our university, then at the museum of science!

Individual Contributions

To summarize my contributions, I have broken down the work I have done as it relates to each milestone. Some of the more informative portions of my work are further explained in each step of the Engineering Design Process.

Milestone #1

For Milestone 1, my job was to do the research on popular and upcoming Museum Exhibit Themes that related to the category of sustainability. This was so our team could have some inspiration for what made a good Museum Exhibit Theme, and would invoke some ideas during the next Milestone where we did some idea generation.

Milestone #2

For Milestone 2, my job was to research into a specific subject Which is a part of our idea generation process. My personal idea and which ones and Stormwater management in the city. I had read some articles that were sponsored by Districts in the state of Massachusetts which encouraged the Massachusetts government to manage our stormwater more efficiently. I had also noticed in my research 4 miles down number one that Stormwater management was a fairly popular museum exhibit topic, but was not a topic that was highly popular, for example recycling.

Milestone #3

My contributions to milestone 30 included as well as finalizing the last sketch for our prototype. This was done as a team in FYELIC.

Milestone #4

for milestone 4, I was assigned to be the project manager. This was an especially heavy milestone as our group had to complete 60% of the construction alongside most of the hardware and code. I encouraged my group to start working on the milestone as soon as possible due to the limited time we had to complete the milestone. Lauren Katie and Nick worked on the construction while I worked on a fair amount of the hardware and the code. The code was originally written in Arduino following an synchronous format, which was later changed. The wire diagram, code, and the proof of concept video were all my contributions to the milestone. Additionally, our team had completely reformatted our exhibit, which made my presentation to the class fairly complex and difficult.

Milestone #5

For milestone 5, my contributions included adapting the code, aiding with construction, and working on the hardware. My teammates and I had decided it would be a good idea to make the code so that rather than the code running synchronously, the code would run all 3 portions of the exhibit at the same time. We also decided we wanted some on-screen displays, so I decided to rewrite the Arduino code into MatLab. The process of converting the code and reformatting the actual structure of the code was a long journey, but eventually I got the code to function in MatLab. Once this was done, a Red Vest at FYELIC recommended we use MatLab App designer to give the whole thing a more game-like design. MatLab app designer was not something I was familiar with, so I did some research on how to use it, and created our basic GUI design. Once this was all complete, I helped with some aspects of the construction for the exhibit, aided slightly in soldering, and tested the hardware with the code, adjusting the code as necessary.

Milestone #6

For Milestone 6, my contributions included finalizing the poster board, printing the poster board, cutting out decorative pieces, implementing our new theme onto our exhibit and the GUI, and assisting in assembly.

Nicholas Gorycki

1.4 Introduction

Problem Statement

Currently, in the United States, renewable energy takes on many forms and is a major part of our infrastructure. Nuclear energy is one of the most overlooked forms of renewable energy, and the education system does not typically teach students, especially at younger levels, it's effectiveness and importance. This is a result of the large stigma that is associated with it along with the political controversy it causes in the United States. Nuclear energy in the past has failed catastrophically (most famously: Chernobyl), but despite having improved upon safety over the 35 years since, the industry is still lacking government support in the United States. It has the potential to be one of the safest and most effective energy sources in our infrastructure. The neglect that this area of renewable energy receives is the driving motivation behind our exhibit. The goal of this exhibit is to provide the user with an experience that effectively provides the aforementioned information.

The primary function of the exhibit in its final form will be to educate the user on the importance and efficiency of nuclear energy through a comparison to two other sources. Further educational goals include teaching the energy density comparisons and destigmatizing the general idea of nuclear energy in the user's mind. These goals will be achieved through an inclusive, accessible, transportable, and interactive design.

While achieving the goals, the exhibit must satisfy a variety of constraints. First, when fully set up, the exhibit sits on a 36" wide by 28" deep tabletop, and it must be safe during both setup and transit. The design must include educational text concisely yet thoroughly explaining the concept, and it must automatically reset so as not to confuse the users. The total cost of the exhibit should be less than $100 when finally produced and, when in transit, must fit within the provided box. Finally, the exhibit must incorporate at least one laser-cut piece and one 3D-Printed component.

Stakeholders

The stakeholders for this design include the client, the users, and other secondary beneficiaries. First, the client, the Boston Museum of Science was the major stakeholder, as they requested the design of this exhibit and provided all of the constraints that were followed. The museum is requesting an enjoyable user experience that they are comfortable with exposing to the public.

Next, the users are stakeholders in this design as they are interacting with the exhibit. This group consists of the parents and children who attend the Museum of Science along with the College of Engineering professors and students who attend the exposition. Since they will be interacting with the exhibit, they will value the educational and interactive components above all else. Also, since the exhibit is about an important topic in the current energy community, it will provoke every user to think at a deeper level.

Finally, some other stakeholders include our professor, Kathryn Schulte-Grahame, and Northeastern University, specifically the College of Engineering. Our exhibit is representative of our professor, who mentored us and educated us throughout the process, and Northeastern's engineering program, as our work appears under the university's name.

Scope

This project spanned throughout the entire engineering design process starting at the formulation of a problem statement and ending with the evaluation of an implemented solution. Our report will focus heavily on the implementation and evaluation of our exhibit since a majority of this project's time was spent within these steps of the process. All of the components of our final exhibit were first prototyped and designed in either hand sketches, AutoCad sketches, or SolidWorks mock-ups. These designs, along with the financial information will all be made available in this report.

1.5 Background

History of the Problem

The stigma around nuclear energy stems from multiple events in the industry's history, the most notable of which being Chernobyl's reactor breakdown. The fear that stemmed from the disaster is still lingering in the public's mind when nuclear energy is discussed. Certain countries have already succeeded in implementing the energy into their grids, but the fear and stigma surrounding nuclear energy's past combined with the density of jobs and money currently depending on the fossil fuel industry are slowing the development of nuclear energy in the United States.

Research

For my research in P2-M2, I focused heavily on two topics, industry guidelines and potential exhibit topics.

Industry Guidelines

While the other members of my group performed research in the existing market and the best practices and tools for success, I was able to research the industry guidelines. To clarify, I gathered resources with standards for how to craft museum exhibits that we later referred to when designing our exhibit. The most used resource was the Guide to Exhibit Development [4] This source were useful references when the group needed to decide upon dimensions or formatting for the exhibit.

Potential exhibit topics

In order to decide upon an exhibit topic, each member in the group split off and performed research specifically on a topic of interest in order to propose topic ideas. Personally, I researched nuclear energy and related topics. The most valuable source that I uncovered was a paper on uranium seawater extraction [27]. The paper was an explanation of how seawater extraction could most likely be the most sustainable method of uranium collection. The immense quantity of uranium that is currently present in the sea would make the use of nuclear energy practically renewable. From this research, I proposed the topic to my group in a game from which the user would simulate the extraction of uranium from the sea.

Ethics

Our exhibit takes a stand on multiple ethical dilemmas, the first being the use of non-renewable energy sources. This is a pertinent issue in the scientific community because if certain practices do not change, the consequences will be immense, causing harm to the earth in a multitude of ways. We attempt to address this concern in our exhibit by educating the younger population on the importance of renewable energy. If we were to simply switch to the better sources of energy in regard to our planet's health, the fossil fuels and other non-renewable resources would be eliminated immediately. There are too many political and economic barriers for this switch to happen at the moment, as the current electrical grid lies too heavily for the sources to switch instantaneously. This leaves the best course of action to be a slow change to renewable sources, which is the idea we want to plant in the future generation's minds.

We cannot sit comfortably with our current electrical grid, instead we have to actively move towards the better options for the global community.

1.6 METHODOLOGY

When working on this project, we approached the goal with the five-step engineering process in mind. Due to this, I have broken this methodology section into the 5 steps of the cycle with an additional contract section preceding the process.

TEAM CONTRACT

The first task that our group completed as a team was the contract. This essentially acted as a way to familiarize ourselves with working on a new team and gave us a task that would clarify how our work would be laid out in later milestones. This activity strengthened our bond as a team and set us up for later success in the project by making use a more cohesive group. Some of the goals we laid out for ourselves as a team included:

I. Complete every assignment early, to the best of our capabilities.
II. Use our time efficiently in group meetings.
III. Learn how to collaborate with others effectively in order to be better team members in future scenarios.
IV. Learn how to use engineering principles creatively and successfully.

After creating these goals, we were able to consistently reflect on our work as we progressed through the project and moderate our own work in accordance with a set of standards.

In addition to these team goals, we also set our own personal goals to add another layer of standards that we were all attempting to meet. Personally, I stated that my goals were to become more open to peer's ideas and mix them with my own while holding myself and others accountable. I achieved both of these goals over the course of this project, as we were able to converse as a team over every decision to decide on the best course of action. In certain scenarios we completed decision analyses of worked through ideation techniques, all of which allowed our ideas to mix and come up with the best possible solution. Along with this, throughout all the milestones I was able to hold everyone's work accountable and up to team standards.

DEFINING THE PROBLEM

The first step of the engineering design process was completed as the first milestone in our group. Here we researched a multitude of topics, mainly focusing on the existing market, industry guidelines, potential exhibit topics, and best practices for tools and success. Through this research, we were able to pick out the defining characteristics of successful exhibits and how they functioned.

My research (on industry guidelines) produced sources for exhibit guidelines and standards that we were able to reference throughout the project. When designing our exhibit, we checked with the guides and standards that I discovered to make sure that the exhibit would be developed to be accessible for every user.

Following our initial research, our team crafted a problem statement to clarify our goals for the project. Our first draft originally stated:

“We will design an inclusive, accessible, and interactive museum exhibit that teaches middle and high school-age students that sustainable efforts in daily life can have a tremendous worldwide impact.”

We presented this problem statement at the first town hall, and received feedback that essentially stated that we needed to clarify a great deal of the details included in our project including the constraints, stakeholders, and functions. To do this we needed to further flesh out our idea and generate more specific ideas

In order to do this, I completed research on uranium seawater extraction in the second milestone. This later became our motivation to form the exhibit around the efficiency and energy density of nuclear energy. If needed, this research is elaborated upon in the background section.

With this new research and deeper thought about the specifications of our project, we were able to create a more detailed problem statement:

“We aim to create a traveling museum exhibit that teaches students ages 10-18 the global impact of sustainable efforts. This is important as some kids cannot travel to museum exhibits, and all should understand the impact of sustainability. Users need an inclusive, accessible, transportable, and interactive design. Our solution is to create an exhibit that teaches children about nuclear energy as a renewable energy source while destigmatizing its use. We also aim to teach children the difference in energy between a Gigawatt, Megawatt, and Kilowatt. The exhibit, when set up, must sit in a 36" wide by 28" deep tabletop, and it must be safe during both setup and transit. The design must include educational text concisely yet thoroughly explaining the concept, and it must automatically reset. The total cost of the exhibit should be less than $100 when finally produced and, when in transit, must fit within the provided box.”

Generating Solutions

In order to generate solutions for this project, the team partook in two ideation techniques, brainstorming and taking on a fresh perspective. Preceding this, the group split off and completed personal research on topics that interested them and generated ideas on how to implement the topics into a game-styled exhibit. Upon completion of this research, the team met up and worked the ideas out further with brainstorming and mixed aspects of each other’s ideas. Once the process began to slow down, we took a step back as a team and observed our current ideas at the time through the lens of a child. This allowed us to make more specific modifications to the ideas that would appeal to the children with ease. My personal change that came from the fresh perspective was the incorporation of a magnet that would be used to indirectly move marbles throughout the exhibit. This later was incorporated into our final nuclear portion of the exhibit. Please view the initial

exhibit ideas that were produced in this milestone below (Figs. 3-6).

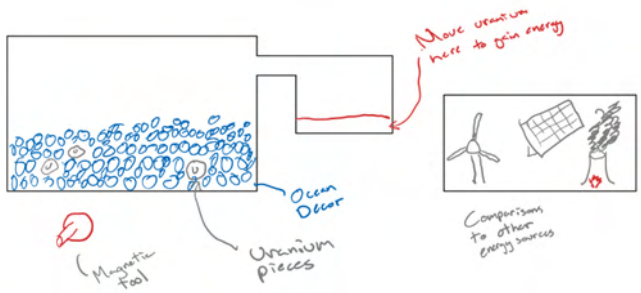

Fig. 4. Uranium Seawater Extraction Exhibit Sketch

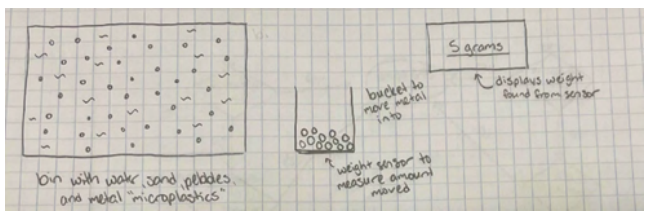

Fig. 3. Microplastic Extraction Exhibit Sketch

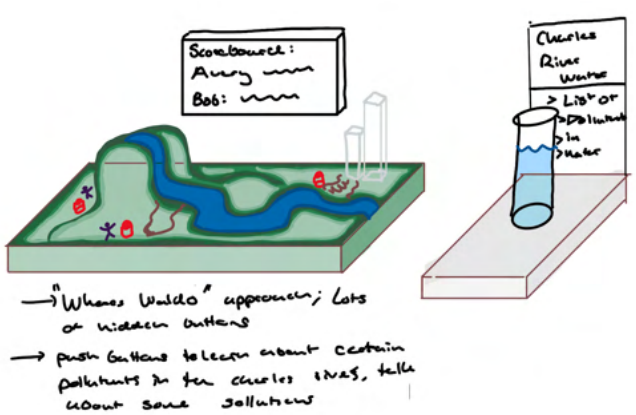

Fig. 6. Stormwater Management Exhibit Sketch

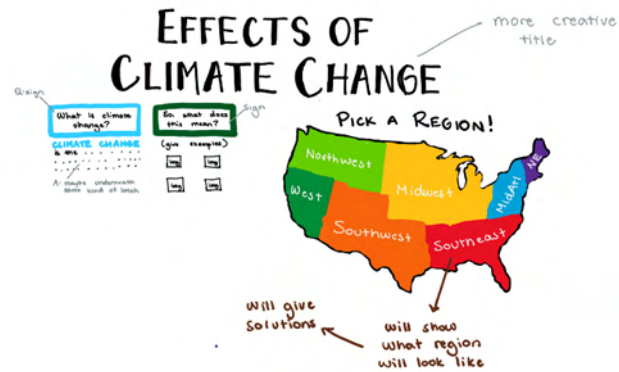

Fig. 5. Climate Change Exhibit Sketch

Decision-Making

For the second part of milestone 2 of this project, we used a Kepner Tregoe decision analysis in order to decide upon one exhibit. The first attributes we determined as necessities for the exhibit were: transportable, accessible, gender-inclusive, and Game based. From these standards, we eliminated the stormwater exhibit due to its lack of transportability and the regional climate change exhibit due to it not being game based. We then proceeded to analyze the remaining two exhibits with regard to the wants that we determined to be: educational, comprehensive, interactive, easily reset, child-proof, applicability, minimalism, and multi-sensory. Through our ratings, we determined that the nuclear sea-water exhibit would be the best choice for moving forward. Please view Appendix B for the completed chart.

Implementing the Solution

From milestone 4 and on, we began the construction of the actual exhibit. First, however, we constructed a cardboard prototype for milestone 3. I have broken this section up into the work that was completed in milestones 3, 4, and 5

Milestone 3

To begin the implementation of our solution, in milestone 3, we created the first iteration of our exhibit through a cardboard prototype. Some advice that we received at milestone 2 led us to make our original idea resettable in the cardboard prototype. In order to complete this task, we gathered cardboard in the dormitory trash rooms, and created a model based on the drawing pictured below (Fig. 10).

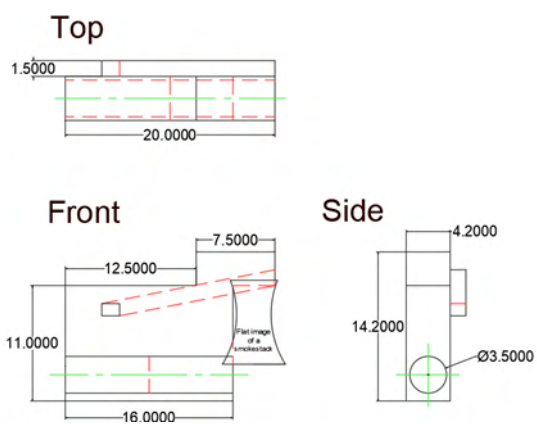

Fig. 10. Nuclear Exhibit AutoCAD Sketch

This prototype incorporated a tumbler at the bottom of the tank that was intended to mix the uranium into the "seawater" after each use. In addition, to make the reset as random as possible, we modeled a pin system with toothpicks where the marbles would fall back into the tank. In addition to the nuclear portion, we also modeled a wheel that would emulate a windmill. This component was created to provide a comparison that the user could use to better understand the energy density of Uranium. The final product that we presented at the end of this milestone can be seen pictured below (Fig. 8).

Fig. 8. Cardboard Prototype

Milestone 4

After presenting the cardboard prototype, we received a large amount of feedback, most of which told us that the prototype was confusing and cluttered. In order to produce the best possible product, we scrapped almost the entire design, and took the basic premise of moving uranium with a magnet and spinning a windmill into a complete redesign. Along with our peer mentor we decided to create a 3 sectioned exhibit that would incorporate nuclear energy modeled in the center and solar and wind energy modeled

on each side as comparisons. The model of the box shape can be seen pictured below (Fig. 13).

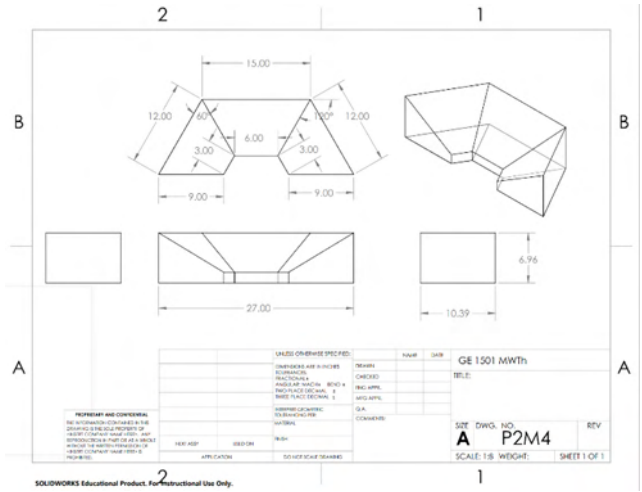

Fig. 13. New Exhibit SOLIDWORKS Orthogonal Sketch

With this new design, we began the construction of the three boxes that made up the exhibit. Using the laser cutter in FYELIC and ¼ in plywood, we cut and formed the pieces necessary, bonding them with hinges and wood glue. The pieces that were laser cut in this step included the wheel for the wind exhibit and the face for the wind and solar components that needed precise circular cut outs along with a solar panel model and a smokestack for the nuclear component. The AutoCAD sketches can be seen in appendix C and the construction that was completed (Fig. 18.)

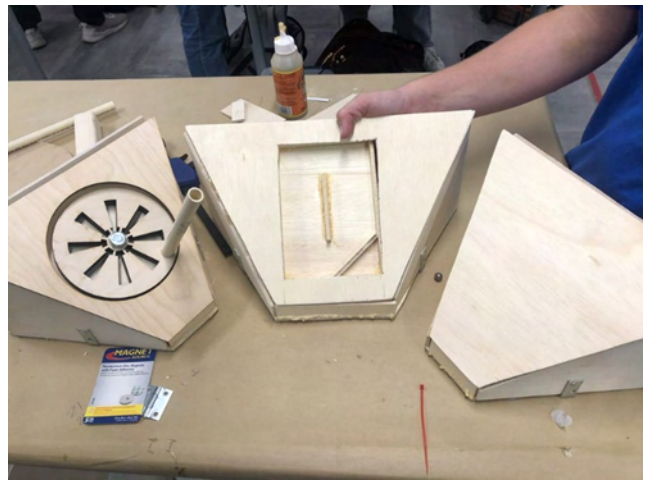

Fig. 18. First Wood Prototype of Exhibit

The goal of this design was to provide three “mini-games” that the user would move through and upon completion of all three portions, they would receive results displaying how much energy they were able to produce with each source. The nuclear exhibit was planned to be played by moving marbles into the model smokestack, the wind was planned to be played by spinning the laser cut wheel, and the solar was planned to be played by simply holding a button down.

Milestone 5

Following the presentation of this redesign exhibit at the end of milestone 4, we were able to receive more input from the class. The first and most important feedback was that it did not seem like the user would feel as though they completed a goal with the current structure. Another point of concern was that the solar portion would be too boring for a user. Even though it wasn’t a main component, it still had to possess some entertainment factor if it were to be

implemented. We kept this feedback in mind as we worked to complete 90% of our exhibit. Most of the work done in this step was separated between construction and coding/wiring, so I will split the following information into those categories.

Construction

To reach the 90% goal, we worked to complete almost all of the exhibits' physical components. To create a handle for the wind portion, a knob was 3D-printed that would fit over a ball-bearing. This would allow it to mount to the PVC pipe, but freely rotate as the PVC moved with the laser cut wheel. Another 3D-printed component was the handle for the nuclear portion that would have magnets mounted inside of it. These SolidWorks drawings can be seen in appendix C. In addition to the 3D printing, we coated the wood boxes with a paper layer in order to make it more appealing visually and cover the sharp edges of the wood. With some more assembling, the exhibit assumed the final form for this milestone (Fig. 23).

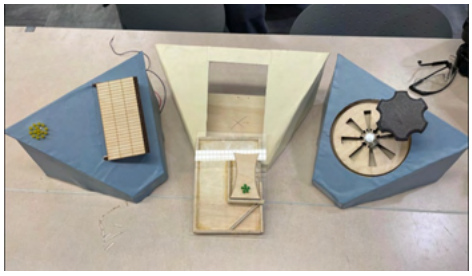

Fig. 23. Wood Prototype of Exhibit with Color

Wiring/Coding

In response to the feedback that was received in the 4th milestone, changes were made to our original plan for how the game would be played. The new idea was to allow the user to freely choose which of the sources of energy that they would like to use. We also decided to make the solar portion response based to make it more interactive. The code was altered to randomly turn the light on and off. With this, the function would subliminally tell the user that solar energy cannot be captured constantly throughout the day. The changes made in milestone 5 resulted in the code reading all three portions of the exhibit simultaneously so that the user would have to learn which energy was the most efficient through trial and error and not have information spoonfed to them.

Evaluating the Solution

In order to evaluate our solution, being our final exhibit, we surveyed each user who interacted with the exhibit at both expositions. From this survey, we learned that 87.5% of users could identify nuclear energy as the most efficient of the three after playing the game. Also, the exhibit received an average rating of 9.125/10 on a scale of enjoyment. After the first exposition, some concerns were raised with the clarity of the instructions, which assisted in preparation for the second exposition at the Museum of Science. We were able to fix this issue with minor changes to the GUI and present our best possible product at the second exposition. The evaluation of our solution provided us with tangible evidence that we used to reflect upon our overall performance.

Individual Contributions

For organization, I have broken this section up to describe my contributions to the project for milestones 1-4.

Milestone 1

In milestone one, I was responsible for performing research on the topics of industry guidelines and potential exhibit topics. As previously stated, my research on nuclear seawater extraction developed into the inspiration for our exhibit, and the research on industry guidelines became a useful resource in constructing our exhibit.

Milestone 2

In milestone two, I assumed the responsibilities of the project manager, where I organized the group's meetings and clarified who needed to do what work at what times. I personally designed the nuclear seawater extraction exhibit (Fig 6). Once the individual designs were completed, I scheduled the meeting with Carrie and I worked with Katie to design the KDTA chart (Fig 10).

Milestone 3

For milestone three, I was responsible for making the AutoCAD sketch of my nuclear seawater extraction prototype (Fig. 11.)After creating this sketch, I worked with the cardboard that my groupmates gathered to create a physical model of the exhibit.

Milestone 4

For milestone four, I was responsible for creating the model of our new exhibit in solidworks. (Fig 13). After creating the model, I biked to Home Depot in order to acquire the necessary materials for construction of the redesigned exhibit. After retrieving the necessary materials I completed the construction of the trapezoidal boxes with assistance from Lauren. After construction was complete I worked with Zeynep to develop a proof of concept in Arduino. Later this was converted to MatLab.

Kathleen Tschoepe

1.7 Introduction

Problem Statement

We aim to create a traveling museum exhibit that teaches students ages 10-18 the global impact of sustainable engineering. The traveling component of this exhibit is important as many children cannot travel to museum exhibits, and all should understand the impact of sustainability. The client and users need an inclusive, accessible, transportable, and interactive design in order to maximize the education aspect of this exhibit. Our solution is to design, create, and implement a museum exhibit that teaches children about nuclear energy as a sustainable and renewable energy source while destigmatizing its use. Additionally, we aim to teach children the difference in energy between gigawatts, megawatts, and kilowatts through comparisons between nuclear energy, wind energy, and solar energy. The exhibit, when fully set up, must sit in a 36" wide by 28" deep tabletop, and it must be safe during both setup and transit. The design must include educational text concisely yet thoroughly explaining the concept, and it must automatically reset so as not to confuse the users. The total cost of the exhibit should be less than $100 when finally produced and, when in transit, must fit within the provided box.

Stakeholders

Our primary stakeholder involved within this project was, foremostly, our client, the Boston Museum of Science. Our client asked our team to design this exhibit; therefore, they are depending upon our successful design to inform visitors about the importance of sustainability in engineering. Other primary stakeholders include the children using the exhibit and their parents, the paying visitors at the museum who desire to obtain extracurricular knowledge. Possible secondary beneficiaries include Professor Kathryn Schulte-Grahame, Northeastern University College of Engineering, and Northeastern University as an institution. Our team's professor mentored us throughout this process; the College of Engineering provided the necessary tools to create the project; Northeastern University is the name underneath which all our work appears. We determined these stakeholders through research and idea generation.

Pertinent Topics in Engineering

Sustainability, regarding our relationship as a society with our environment, is defined as the capacity for human civilization and Earth's biosphere to coexist and thrive. Sustainability often is described with its three pillars of impact: economic, social, and environmental. In engineering scenarios involving sustainability, one must consider these three pillars when designing, creating, and ultimately implementing solutions to benefit all

stakeholders on Earth, which include human civilization and the biosphere.

Considering this topic of Sustainability in Engineering, we chose to investigate nuclear energy as an efficient and long-term sustainable energy source. Nuclear energy, while largely stigmatized by the media, can be an environmentally-friendly source of energy that can fulfill our nation's daily energy budget of terawatts. Using uranium extracted from the ocean and many of its microplastics, we can produce nuclear energy while also cleaning and filtering our water.

Nuclear energy is much more efficient than both wind and solar energy, commonly used renewable energy sources [4]. Nuclear energy is six times more efficient than solar energy, and it is slightly more than twice more efficient than wind energy. Solar energy is typically measured in kilowatts, wind in megawatts, and nuclear in gigawatts, which additionally conveys its much larger efficiency. Demonstrating the energy efficiency component of nuclear energy as well as information about its renewability and sustainability would be essential in order to destigmatize its use both to our stakeholders and to the public.

Scope

This report will cover our entire design process for this report: research, idea generation, design, stages of creation, implementation, and evaluation. All design components of this project will be featured in the form of hand-drawn sketches, AutoCad drawings, or SOLIDWORKS models. Additionally, financial spending and distribution of funds will be discussed.

1.8 Background

Research

In order to adequately define the problem and assignment presented by the Boston Museum of Science, we researched four essential topics: the existing market, industry guidelines, potential topics, and my personal research contribution, best practices and tools for success.

Existing Market

Regarding the existing museum exhibit market, museums today are moving towards being accessible and engaging for everyone. For handicapped individuals, some museums have apps where one can plan a route before they visit, which includes elevators, areas with different lighting, or audio guides to make their experience as enjoyable as possible [3]. Museums assist other groups, like blind visitors, by creating 3D-printed models of exhibits and providing small guided tours so they can experience the museum [13]. There is also an increased focus in museums for exhibits to engage girls in STEM or children interested in learning something new [6].

Industry Guidelines

In the current industry, interactive museum exhibits have become a standard, and as a result, many scientific institutions have created guidelines for effective exhibit creation, considering all aspects of design [2]. Outlining the most important aspects of accessibility and effectiveness, these guidelines provide detailed insight into the best design practices, ranging from text formatting to exhibit dimensions [4].

Potential Exhibit Topics

We researched potential exhibit topics that could qualify for our theme of sustainability in engineering. In a time where sustainability is constantly adapting and changing, there are a variety of practices and systems that are slowly on the rise and being pushed to be implemented in everyday life. One practice is the implementation of stormwater management systems. Through these systems, the toxic chemicals that end up in public drains due to stormwater can be filtered out [1]. Another practice is upcycling plastic bottles into “eco-bricks” to reduce plastic pollution [15]. Lastly, a newer form of sustainable energy is the waste-to-energy system, which transforms combustible waste into energy [22].

Best Practices and Tools for Success

We researched both successful and ineffective museum exhibits so that we would have a better understanding of how we can succeed with this project. Modern science museum exhibits are becoming project and game-based, which have been more successful in teaching children new skills. In project-based learning, students solve real-world problems to reinforce the idea that they can solve and address larger issues with a diverse group of experiences and ideas [7]. New focus is drawn towards signs that ask children questions throughout the exhibit to strengthen the development of their scientific reasoning [11]. A successful museum exhibit promoting sustainability reinforces the audience’s problem-solving skills by allowing them to address issues in the field.

Ethics

The ethical problem our project addresses is the use of nonrenewable energy sources that pollute and permanently damage the environment. This issue is significant because, if not resolved, we will face immeasurable consequences in the future, deplete all known energy sources, and lack breathable air. Our project teaches the user about renewable energy sources and their efficiency to encourage the use of these energy sources in solving this ethical problem. Some complications within the use of these energy sources, however, is budget, space, and job availability. Switching from our current methods of producing energy to more renewable sources will eliminate many jobs that current workers depend on, many of which likely may not have the qualifications to work with these new energy sources. Regarding budget and space, nuclear energy, while the most efficient, is also the most expensive to produce and maintain. One must consider all these complications in comparison with the effects of renewable energy to make important tradeoff decisions that lead to a more sustainable society.

Universal and EDGE Design

Universal design in engineering is defined as the "design and composition of an environment so that it can be accessed, understood, and used to the greatest extent possible by all people regardless of their age, size, ability or disability" [25]. Similarly, EDGE design is a design created to include concepts that appeal to all genders, races, and sexual orientations [5]. For our exhibit, we needed to be mindful of the age and height of the children, conscious of unconscious gender bias in our design, and focused on providing the best educational experience for all potential visitors in the given age range. Specifically, we researched the average height of ten-year-old children, 4'2"-4'11", and designed the main focuses of our exhibit to reach that eye level. We angled our exhibit components so that they could see them, and so that children in wheelchairs could easily access them. We included representation of all genders in our exhibit to encourage all children to engage, and we included various race representations so as not to exclude any children as well. Universal design was of the utmost importance throughout our design process for this project.

1.9 Methodology

Team Contract

At the beginning of our work together as a team, we created a contract to define our standards for respect, commitment, transparency, communication, and justice. This contract was essential to strengthen our relationship as a team, so we could work efficiently, strongly, and effectively. Additionally, we defined our team goals as the following, all of which highlight our standards for the elements above:

I. Complete every assignment early, to the best of our capabilities.
II. Use our time efficiently in group meetings.
III. Learn how to collaborate with others effectively in order to be better team members in future scenarios.
IV. Learn how to use engineering principles creatively and (hopefully) successfully.

These goals helped us work with something to achieve as a team, and looking back upon them, we feel confident that we accomplished them.

In addition to team goals, we each set personal goals. My goals were to become more vocal with my ideas and opinions and to learn to lead where needed. I achieved the first goal by contributing to a supportive and casual team environment in which I felt more comfortable. In that environment, I was able to share all my ideas, unafraid of my peers' judgment, consequently improving my creativity and confidence. Additionally, I became a stronger leader through this project. As a team manager, I ensured that my team members completed their work to our team standards, organized our work, and presented it properly. I never became overly stubborn, and I never put too much pressure on my fellow teammates, for I did not want them to do so when they were team managers. When I was not a manager, I led by example by doing work that I recognized needed to be done, whether I had signed up for it or not. This project strengthened my communication, management, confidence, and leadership skills, helping me become a better engineer in the process.

Define the Problem

In order to adequately define the problem and assignment presented by the Boston Museum of Science, we researched four essential topics: the existing market, industry guidelines, potential topics, and my personal research contribution, best practices and tools for success. Through this research in milestone one, we identified past successes for museum exhibits in order to understand how we could do so ourselves, while also recognizing what we should avoid doing in failure. We identified the project's functions as its ability to educate children about nuclear energy as a renewable energy source, its interactiveness, and its portability. We discussed our objectives and goals for the project and determined that we wanted the children to learn about energy density in addition to nuclear energy as a whole, and we wanted to be ultimately proud of our creation. We discussed the constraints of our project: it must fit within 36" wide by 28" deep tabletop and inside the box while in transit, and it must cost less than $100.

Lastly, we identified possible stakeholders for the problem as the Boston Museum of Science, its paying visitors, Professor Kathryn Schulte-Grahame, Northeastern University College of Engineering, and Northeastern University as an institution. After completing this research, we wrote our first problem statement:

"We will design an inclusive, accessible, and interactive museum exhibit that teaches middle and high school-age students that sustainable efforts in daily life can have a tremendous worldwide impact."

After receiving feedback from the first town hall meeting, however, we adjusted our problem statement to include all the tools for success, functions, objectives, constraints, and stakeholders found from our research and developed our final problem statement:

"We aim to create a traveling museum exhibit that teaches students ages 10-18 the global impact of sustainable efforts. This is important as some kids cannot travel to museum exhibits, and all should understand the impact of sustainability. Users need an inclusive, accessible, transportable, and interactive design. Our solution is to create an exhibit that teaches children about nuclear energy as a renewable energy source while destigmatizing its use. We also aim to teach children the difference in energy between a Gigawatt, Megawatt, and Kilowatt. The exhibit, when set up, must sit in a 36" wide by 28" deep tabletop, and it must be safe during both setup and transit. The design must include educational text concisely yet thoroughly explaining the concept, and it must automatically reset. The total cost of the exhibit should be less than $100 when finally produced and, when in transit, must fit within the provided box."

Generate Solutions

In milestone two, we all conducted more individual research on topics within sustainability that interested us, including microplastic filtration, renewable nuclear energy, climate change, and stormwater management. Then, we met as a group to generate ideas for solutions to our problem. The idea generation techniques that we chose to use were brainstorming and obtaining a fresh perspective. Brainstorming allowed us to place any and all ideas we had in the open without judgment, while by obtaining a fresh perspective and thinking through the minds of children, we were able to develop more creative ideas. One perception block that we experienced as a team was unnecessarily limiting the problem, saying that we cannot use certain subjects for a museum exhibit, some of which ended up influencing our final solution. Nevertheless, we all drew sketches of potential museum designs to consider during this project (Figs. 3-6).

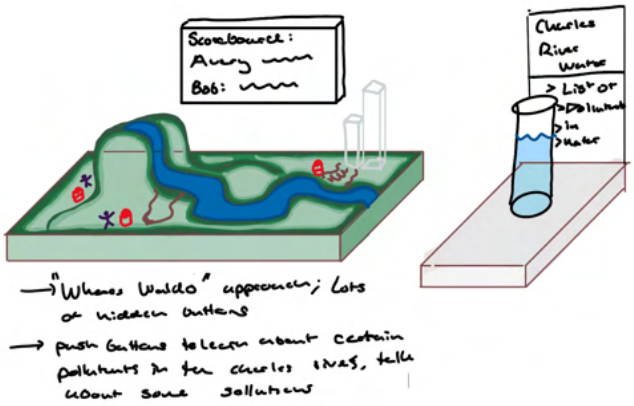

Fig. 6. Stormwater Management Exhibit Sketch

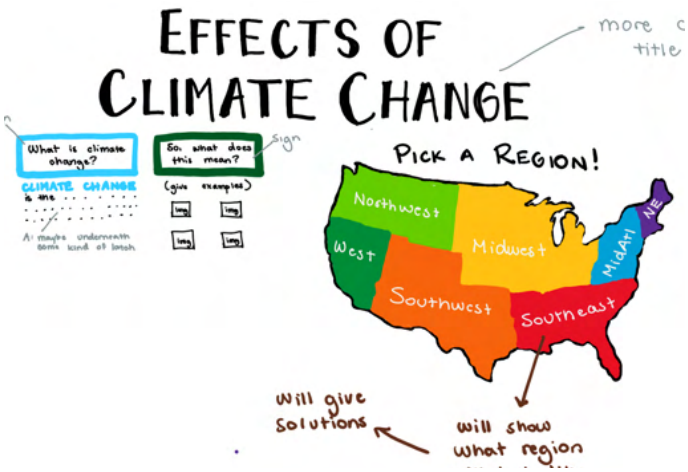

Fig. 5. Climate Change Exhibit Sketch

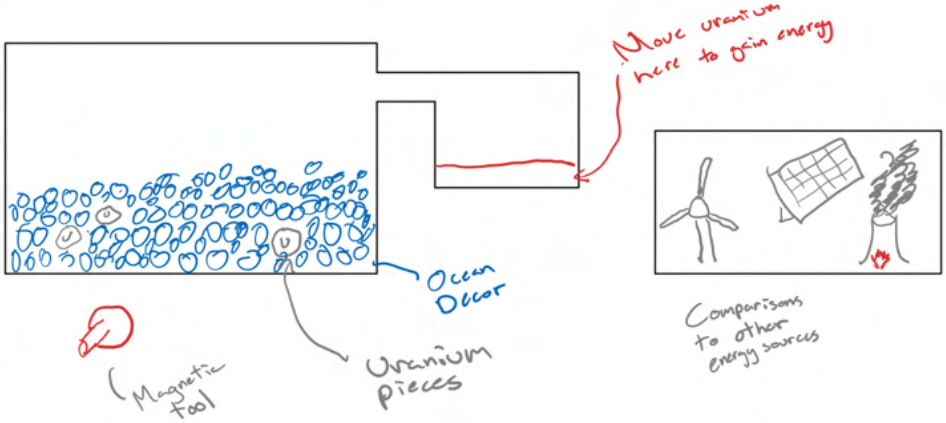

Fig. 4. Nuclear Seawater Extraction Exhibit Sketch

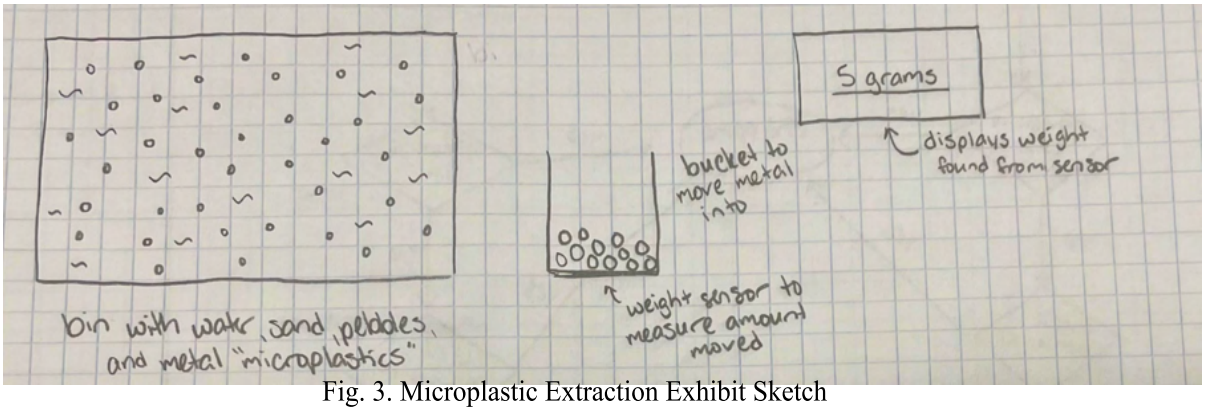

Fig. 3. Microplastic Extraction Exhibit Sketch

Decide the Course of Action

After sketching our final design options, we needed to decide which idea we would move forward with. In order to do so, we performed a decision matrix (Appendix B) to transform a qualitative decision into a more quantitative one. In our decision matrix, we determined four needs for the exhibit: portable, accessible, gender-inclusive, and game-based. After discussion, we eliminated the climate change exhibit on the basis of its non-game-based foundation, and we eliminated the stormwater exhibit because we believed that its water elements would make it difficult or impossible to transport. Next, we determined eight wants and corresponding weights for each one: educational, comprehensible, interactiveness, easily reset, kid-proof, applicability, minimalism, and multi-sensory. Ranking each remaining exhibit under these categories on a scale of one to ten, we eventually determined to move forward with the nuclear exhibit over the microplastic exhibit because it scored over one hundred points higher than the microplastic exhibit. This point difference was largely due to the nuclear exhibit being more interactive, easier to reset, more kid-proof, and more multi-sensory. After deciding on our course of action, we met with our mentor to obtain her feedback and approval. She liked the idea of our exhibit yet requested that we make the information simpler so that children could more easily understand it. We determined that our exhibit would have one main container of gravel and magnetic marbles with a piece of acrylic in front of it. Children would use a magnet to pick up marbles from the gravel and drag the marbles through a short maze and into a tower that would light up. After the marble was dropped into the tower, it would roll along a ramp at the back of the exhibit and fall through a hole in the center, back into the gravel pit.

Implement the Solution

Milestone Three

In milestone three, we created a cardboard prototype of our first museum design. We obtained cardboard from large recycling bins in our residence buildings' trash rooms and packaging tape from FYELIC to complete this task. Before we started, we used feedback from our second town hall meeting to design our exhibit. We were advised to design the exhibit so that it automatically reset, so we decided to incorporate a tumbler within the container of the gravel and marbles that could be spun to mix them up. Additionally, we added a pin board across the back of the container underneath the hole of the ramp so that the marble could fall more randomly in the bin. After rethinking our exhibit, we sketched our design on AutoCad to ensure that we had appropriate dimensions to fulfill the dimensional constraints of the project (Fig. 10).

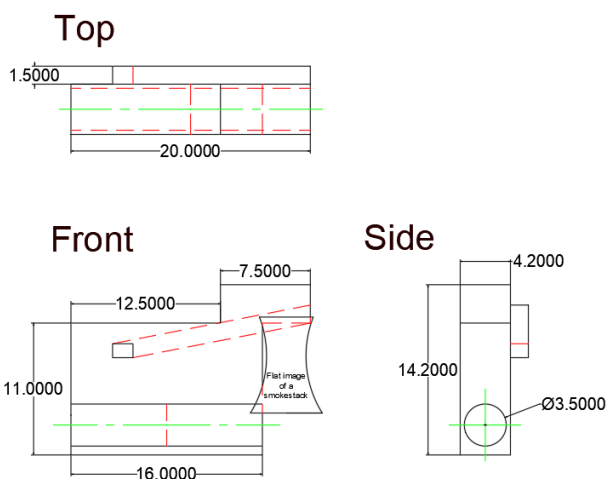

Fig. 10. Nuclear Exhibit AutoCAD Sketch

In addition to the AutoCad sketch, we decided to create a windmill simulation that would stand alongside the main nuclear exhibit, with which children could spin a wheel to produce power. This side exhibit would serve as a comparison to emphasize the efficiency of nuclear energy. Using the AutoCad sketch, we cut cardboard according to our dimensions and taped them together where needed. We created the wheel by cutting out two rings and multiple small rectangles of equal height that We placed between the two rings, acting as the wheel's outer rim. We punched a hole in the top of the wheel, placed it in a small box, and placed a pencil in the hole in the wheel to act as a handle to spin it (Fig. 8).

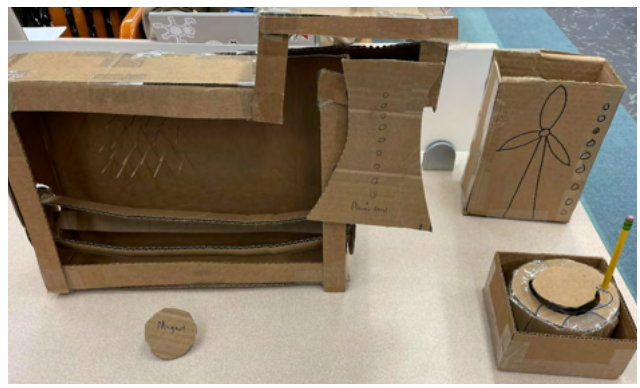

Fig. 8. Cardboard Prototype

Milestone Four

After presenting this prototype in our third town hall meeting, we received an immense amount of feedback that led us to redesign most of our exhibit in milestone four. As our classmates pointed out to us, our original museum exhibit design as proposed in milestone three did not effectively communicate to children one clear and concise message due to the two entirely separate components. We determined that if a room of college students found our exhibit confusing, then ten year olds must as well. As a result, we decided, along with our mentor, to update our design to include three forms of renewable energy: nuclear energy, solar energy, and wind energy. The goal of this new design would be to directly compare the energy created

through nuclear power to solar and wind energy. The original nuclear energy exhibit fundamentally stayed the same, but the sea-extraction component was no longer included and the box was scaled down. The solar energy component was also added into the exhibit, and would be played by pushing a button to mimic producing solar energy. When the button is pushed, LEDs light up. The wind energy display would stay the same as the previous design. The exhibit is also now displayed on an angle to allow easier access, and it would sit within the angles of the standing tri-fold poster. We altered the main focus of our exhibit from defining nuclear as a renewable energy source to conveying nuclear energy as the most efficient renewable energy source. After redesigning our idea, we created a design of the three components in SOLIDWORKS (Fig. 28) with more detailed drawings containing dimensions in AutoCAD (Figs. 14, 25).

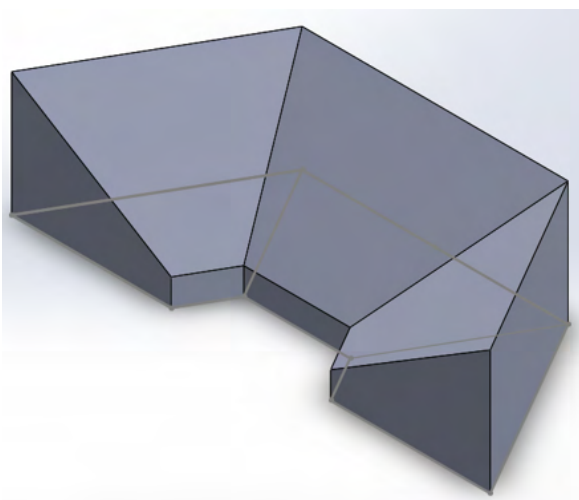

Fig. 28. New Exhibit Design SOLIDWORKS Model

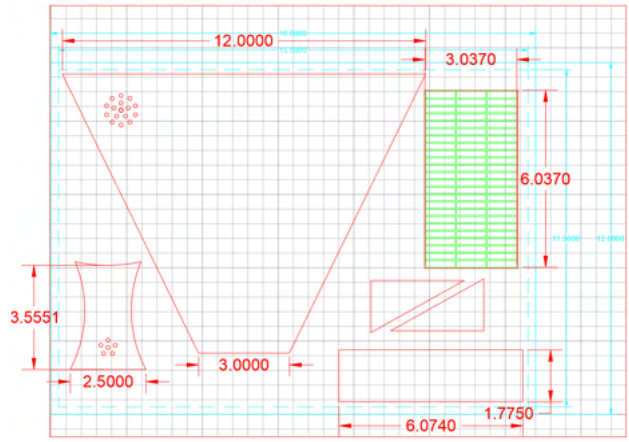

Fig. 25. Nuclear and Solar Components AutoCAD Sketch

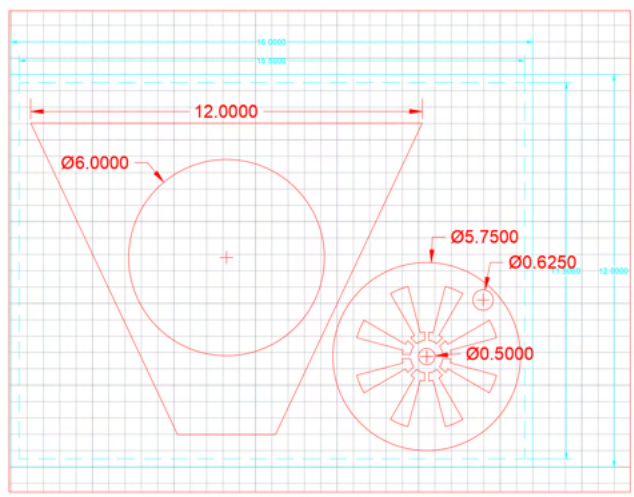

Fig. 14. Wind Component AutoCAD Sketch

Using these plans, we laser cut the new wheel, a solar panel, and the nuclear tower on the front of the acrylic box. Next, we sawed wood to create the boxes for the components, and we connected these wood pieces together with wood glue or hinges where appropriate. Lastly, we added final touches, including marbles and a PVC pipe handle for the wind component. The final wood prototype for this design without the solar panel can be seen (Fig. 18).

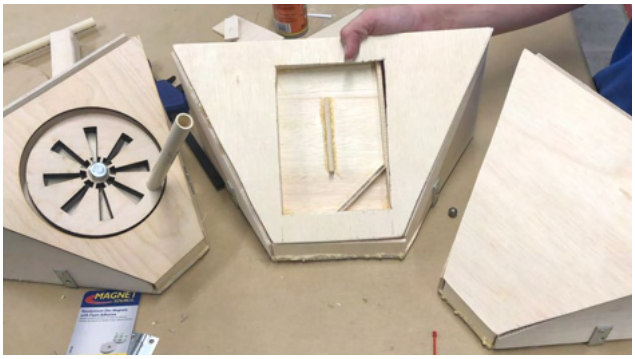

Fig. 18. First Wood Prototype of Exhibit

Milestone Five

At the end of this milestone, we would need for our project to be 90% done. We defined the remaining 10% as the aesthetics and remaining unforeseen necessary edits. Following our fourth town hall meeting, however, we decided to make a few changes. As our classmates pointed out to us, after playing our exhibit, it did not feel like they achieved something. As a result, we decided to update the way our exhibit is played so that the user can play whichever "minigame" they want to produce as much power as they can in an allotted time. At the end of that time, the user will see how much energy was created through each of the power sources (nuclear, wind, and solar), and they would want to play again to increase the amount of power they produced. We also made slight adjustments to the solar portion of the exhibit, so the student can only produce power from solar panels when the sun is lit, and they press a button. This exhibit reflects how solar power can only be produced when the sun is out and makes the game more interesting as they won't be holding a button for 20 seconds. We also made slight adjustments to the nuclear exhibit, so there is now a limit to how much nuclear energy that can be produced. Before, the marbles would immediately fall down the ramp to be picked up again; now they will remain in the nuclear tower until the end of the timer, so the user feels as if they are collecting all the marbles and will still be persuaded to use the other two exhibits. Finally, we will be implementing a map onto our trifold that will light up as the user produces energy through the game. The map consists of various locations throughout Boston that the user needs to light up, with the ultimate goal of being able to light up all Boston with the power they produce (Fig. 29).

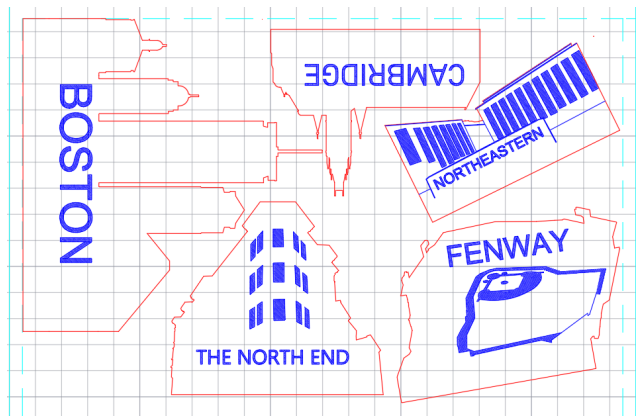

Fig. 29. LED Acrylic Pieces AutoCAD Sketch

After making these slight changes, we began reconstructing. First, we took the back pieces off our exhibit components, since the trifold acts as their backing, enabling the wires to run more freely between them. Next, we redesigned the box for the nuclear minigame so that the marbles collect on a ledge hidden from the user, and the ledge can be pulled out to reset the game. For the wind minigame, we cut down the PVC pipe handle and attached the 3D-printed knob so that the game is easier to use (Fig. 30).

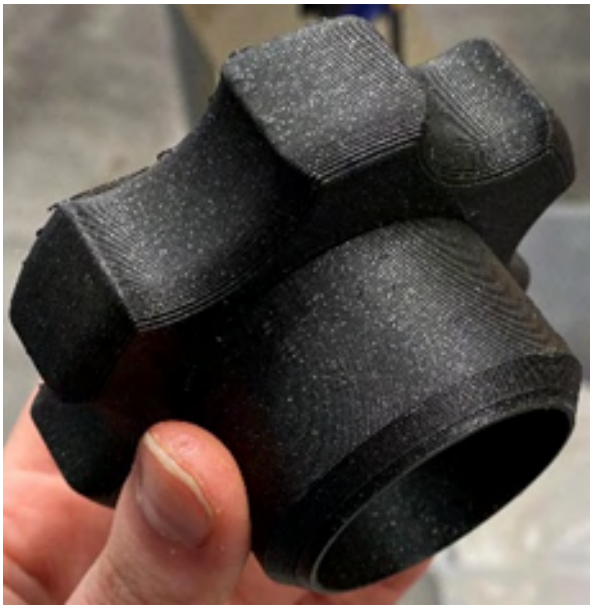

Fig. 30. 3D-Printed Wind Component Handle

Next, we focused on the hardware and coding components by soldering wires and attaching them to breadboards inside each of the exhibits. Lastly, we pasted cardstock on our boxes with Mod Podge, so they no longer had sharp edges, completing our final design (Fig. 23).

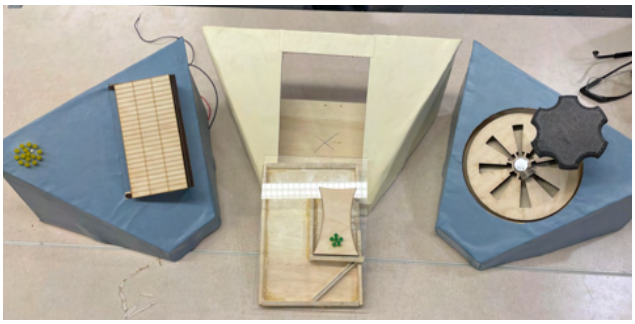

Fig. 23. Wood Prototype of Exhibit with Color

Final Design

After presenting our design from milestone four in a gallery walk during class, we decided to make some final changes. Primarily, we implemented a theme of Tim and Moby from BrainPop, since we used information from BrainPop to define the types of energy sources on our tri-fold. Additionally, we made the colors of our exhibit much more vibrant so that it was more attractive and aesthetically pleasing.

For the construction of our final design, I laser cut the acrylic pieces of the Boston locations to be used on the trifold, in addition to the wood slits they would rest inside of that contained LED strips. Next, we repainted the exhibit boxes to be yellow for solar, purple for nuclear, and light blue for wind, and we painted the nuclear tower, wind wheel, and PVC pipe silver. We printed the information for our trifold and pasted images of Tim and Moby both on our trifold and on the boxes of the exhibit. We attached the laser cut pieces in their wooden boxes to the trifold, and we adjusted the code as needed for the program to work, and we soldered new wires where necessary. Lastly, we altered our feedback survey to ask the following questions:

- Were you able to engage with all sections of the exhibit?
- On a scale of 1-10, how much did you enjoy the exhibit?
- Which of the three sections was your favorite?
- Rank these power sources (Nuclear, Solar, Wind) from least to most efficient.
- Do you have any feedback on how to improve this exhibit?

To finally implement our design, we showcased it at two expositions: one in Curry Student Center on Friday, December 3rd, 2021, and the final one at the Boston Museum of Science on Saturday, December 4th, 2021 (Fig.

31). We observed and obtained excellent feedback at both of these expositions.

Fig. 31. Final Exhibit at the Museum of Science

Evaluate the Solution

According to our feedback survey, all users confirmed that they engaged with all components of the exhibit, and, on average, rated the exhibit as a 9.125/10. 72% of visitors claimed the nuclear component as their favorite, and 87.5% of visitors correctly concluded that nuclear energy was the most efficient out of the three simulated energy sources. Following the first presentation of our exhibit, our most helpful feedback was to provide more detailed instructions for each game, to weigh down the wind exhibit more, and to have sound effects throughout the game. We responded to all of this feedback and improved our exhibit before presenting it at the Boston Museum of Science. These two data results reflect two of the main goals of our exhibit: to be interactive and to be educational. Therefore, we believe that our developed solution addressed the problem presented by the client.

Individual Contributions

In milestone one, I served as the project manager for our team. As project manager, I was responsible for organizing my team's status memo, creating a table that showed the hours spent on this portion of the project, and presenting our progress in the Town Hall meeting as of milestone one in the form of a PowerPoint. As project manager for this milestone, I found that one of my strengths is organization. I did an excellent job making sure that everyone sent their work to me so that I could put it together in a way that makes sense to a viewer. Another strength that came out was my blunt honesty, which I believe to be a strength in scenarios like this portion of the project, for I was able to tell people complete their responsibilities instead of nicely accepting their work as my own. While I think I led my team well, one of my weaknesses is my lack of confidence both in my leadership abilities and in my presentation skills. I generally rise above my inner self-critic, but I believe I need to be more comfortable in these circumstances.

In milestone two, I researched climate change and designed the climate change exhibit**.** Additionally, I created the design matrix with Nick since we were the most proficient in Microsoft Excel.

In milestone three, we mostly worked as a team, but I made the entire cardboard wheel by myself (Fig. 9). In addition, I did most of the more complex taping.

Fig. 9. Cardboard Wheel Prototype

For milestone four, I did not have a designated task, but I glued wood pieces together, sanded edges, and measured as needed.

For milestone five, I was most responsible for purchasing the cardstock to cover the boxes, covering the boxes using mod podge, and 3D-printing the black knob for the wind component of our exhibit (Fig. 32).

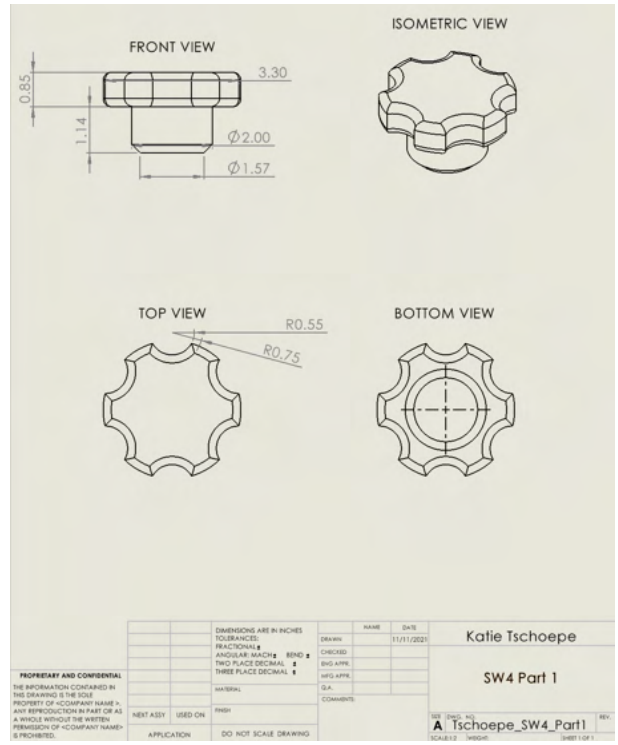

Fig. 32. Wind Component Handle SOLIDWORKS Sketch

Finally, for milestone six, I laser cut the new acrylic and wood pieces (Fig. 33), reimagined components of the nuclear exhibit, attached the acrylic pieces to the trifold, wrote text on the trifold, and pasted images of Tim and Moby throughout our exhibit. While at the museum, I was responsible for taking photos and videos.

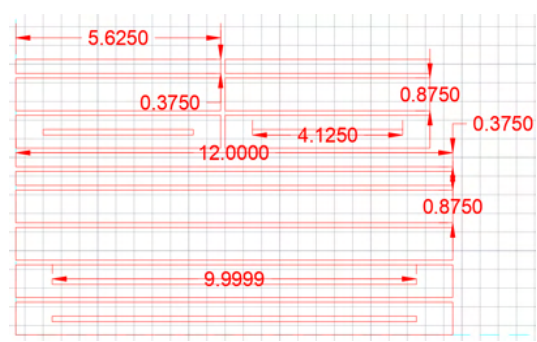

Fig. 33. LED Strip and Acrylic Holder AutoCAD Sketch

Lauren Ward

1.10 Introduction

Problem Statement

Renewable energy sources are becoming a necessity as we learn more of the dangers of nonrenewable energy sources such as coal and fossil fuels. Although many are aware of renewable energy sources, they are not often implemented due to low efficiency of power sources such as solar and wind. One solution is nuclear energy, however, it is not often implemented because of the stigmatization surrounding its use. We aim to create a traveling museum exhibit that teaches students ages 10-18 the differences in efficiencies between renewable energy sources. Users need an inclusive, accessible, transportable, and interactive design. Our solution is to create an exhibit that teaches children about nuclear energy as a renewable energy source while destigmatizing its use. We also aim to teach children the difference in energy efficiencies by comparing solar, nuclear, and wind power. The exhibit, when set up, must sit on a 36" wide by 28" deep tabletop, and it must be safe during both setup and transit. The design must include educational text concisely yet thoroughly explaining the concept, and it must automatically reset. The total cost of the exhibit should be less than $100 when finally produced and, when in transit, must fit within the provided box. and it must be safe during both setup and transit. The design must include educational
text concisely yet thoroughly explaining the concept, and it must automatically reset. The total cost of the exhibit should be less than $100 when finally produced and, when in transit, must fit within the provided box.

Stakeholders

The primary stakeholders of this project was our client, the Boston Museum of Science. As a group, we were tasked by the client to make a museum exhibit that will engage as well as educate the users on a topic of sustainability. The user(s) include the children as well as their parents that visit the Museum of Science. Along with our primary beneficiaries, there are also many possible secondary beneficiaries as well. Some of the possible secondary beneficiaries include our professor, Kathryn Schulte-Grahame, as she mentored us throughout the process and taught us the necessary skills to develop this project. Another possible secondary beneficiary is Northeastern University as they provided us with many of the necessary materials to complete this project and all of our work would appear under their name.

Pertinent Topics in Engineering

As we continue to progress in engineering, sustainability has become an essential topic within the design process. Sustainability focuses on the impacts of technology on people, the planet, and includes the profit gained through a project. When designing and implementing solutions within engineering, all three of these factors must be considered to be able to protect the environment as well as those who inhabit it.

To portray this message of sustainability in engineering, we decided to conduct research into nuclear energy as an efficient and renewable energy source. As compared to

other renewable energy sources, nuclear energy is one of the most efficient, being about 6 times more efficient than solar and 2 times more efficient than wind energy. However, due to stigmatization, nuclear power is not often used even though it is one of the safest forms of renewable energy with proper regulations in place. Nuclear power is also capable of producing gigawatts of energy which is a necessity in larger countries such as the United States which uses terawatts of energy daily. By demonstrating how much more efficient nuclear energy is compared to other sources in our museum exhibit, we hope to destigmatize the use of nuclear energy to the public.

Scope

This report will discuss the design process to reach our final design including research, idea generation, decision making, implementation, and evaluation. All the design components will also be featured in this report including hand drawn sketches, AutoCAD drawings, and SOLIDWORKS models. Also mentioned will be our financial spendings as well as how we distributed our time and money throughout this project.

1.11 Background

Research

To be able to properly define a problem statement, we began by conducting research into what makes a good exhibit. To do so we each researched important factors to be considered when designing a museum exhibit with my personal contributions being research into the existing market.

Existing Market:

Museums today are moving towards being accessible and engaging to everyone. There are many practices that are being put into place to assist those who are handicapped or visually impaired to make their experience as enjoyable as possible. For those who are handicapped, some museums have an app where one can plan a route before they arrive which includes elevators, areas with different lighting, audio guides, and more. Other implemented ideas are to create 3D printed models of exhibits for those who are blind and also provide small guided tours so they can experience the museum in their own way. There is also a focus in some museums for exhibits to be more engaging for girls in STEM or children interested in learning something new.

Industry Guidelines:

In the current industry, interactive museum exhibits have become a standard, and as a result many scientific institutions have created guidelines for effective exhibit creation, considering all aspects of design. Outlining the most important aspects of accessibility and effectiveness, these guidelines provide in-depth insight into the best practices in design ranging from text formatting to exhibit dimensions.

Best Practices for Success:

Modern science museum exhibits are becoming project and game-based, which have been more successful in teaching children new skills. In project-based learning, students solve real-world problems, reinforcing the idea that they can solve and address larger issues with a diverse group of experiences and ideas. In children's science exhibits, new focus is drawn towards signs that ask children questions throughout the exhibit to strengthen the development of their scientific reasoning. A successful museum exhibit promoting sustainability will reinforce the audience's problem-solving skills by allowing them to address real-world issues in the field.

Potential Exhibit Topics:

In a time where sustainability is constantly adapting and changing, there are a variety of practices and systems that are slowly on the rise and being pushed to be implemented in everyday life. One practice is the implementation of stormwater management systems. Through these systems, the toxic chemicals that end up in public drains due to stormwater can be filtered out. Another practice is upcycling plastic bottles into "eco-bricks" to reduce plastic pollution. And lastly, a newer form of sustainable energy is the waste-to-energy system, which takes (combustible) waste and turns it into energy through heating up the waste and using its steam to create energy.

1.12 Methodology

Team Contract

To begin this project, we met together to develop a team contract that would uphold our values of respect, responsibility, and solutions for any possible future conflict. This allowed us the opportunity to learn how to communicate with one another before the project started and set a standard to uphold throughout the project. We also mentioned the goals we wanted to achieve as a team which included:

I. Complete every assignment early, to the best of our capabilities.
II. Use our time efficiently in group meetings.
III. Learn how to collaborate with others effectively in order to be better team members in future scenarios.
IV. Learn how to use engineering principles creatively and (hopefully) successfully.

With these goals in mind, we were able to develop a project knowing we were all on the same page and we could feel confident moving into further milestones.

As well as our team goals, we each set personal goals for ourselves. My goals going into this project were to not procrastinate my work to the last minute and to be sure to contribute my ideas to group discussions. I achieved my first goal, and stuck to the unofficial deadlines we made as a group instead of waiting to the last minute to complete assignments. This was definitely a difficult habit to break at first, however, I learned to truly balance my time between the different assigned projects in this class as well as my work for other classes. I also achieved my second goal as always voiced my ideas to the group. I sometimes find it hard to speak up when I am with a new group of people, however, the more I voiced my opinions the more I became comfortable with my group and was fully comfortable sharing my ideas.

Defining the Problem

To be able to properly define a problem statement, we began by conducting research into what makes a good exhibit. To do so we each researched important factors to be considered when designing a museum exhibit with my personal contributions being research into the existing market. With this research from milestone one, we were able to define what makes a great museum exhibit as well as what we should avoid to ensure our exhibit is inclusive and accessible. We also came to a consensus as a team that our goal would be to create an exhibit that would educate children about accessibility through our game-based design. With this in mind, we created our first problem statement:

"We will design an inclusive, accessible, and interactive museum exhibit that teaches middle and high school-age students that sustainable efforts in daily life can have a tremendous worldwide impact."

After receiving feedback from our peers after milestone one, we were made aware that our problem statement was not specific enough. We needed to create a specific problem statement that we specifically could solve. With

this in mind, we were able to create a new problem statement which addresses our goals much more clearly:

"We aim to create a traveling museum exhibit that teaches students ages 10-18 the global impact of sustainable efforts. This is important as some kids cannot travel to museum exhibits, and all should understand the impact of sustainability. Users need an inclusive, accessible, transportable, and interactive design. Our solution is to create an exhibit that teaches children about nuclear energy as a renewable energy source while destigmatizing its use. We also aim to teach children the difference in energy between a Gigawatt, Megawatt, and Kilowatt. The exhibit, when set up, must sit in a 36" wide by 28" deep tabletop, and it must be safe during both setup and transit. The design must include educational text concisely yet thoroughly explaining the concept, and it must automatically reset. The total cost of the exhibit should be less than $100 when finally produced and, when in transit, must fit within the provided box."

Alternate Solutions

When beginning milestone two, we each conducted individual research into different sustainability topics. The topics which were researched included: nuclear seawater extraction (Fig. 4), microplastics (Fig. 3), stormwater management (Fig. 6), and climate change (Fig. 5). I personally did research into microplastics and the new methods that are being introduced to removing them from our oceans. One of those solutions was magnets that were found to be about 85% to 92% effective in removing microplastics from water [10]. The idea of magnets reminded me of many of the exhibits that were featured at the Boston Museum of Science when we visited as a class. Because of this, I decided to create an exhibit where the user would be extracting "microplastics" from water and placing them on a weight sensor. Once their time runs out, they would see how many microplastics they had collected and learn more about the microplastics in our ocean. Other sketches of our individual designs can be seen from Figures 3-6.

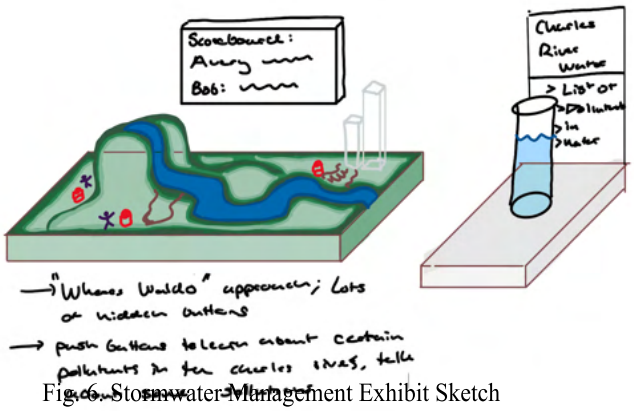

Fig. 6. Stormwater Management Exhibit Sketch

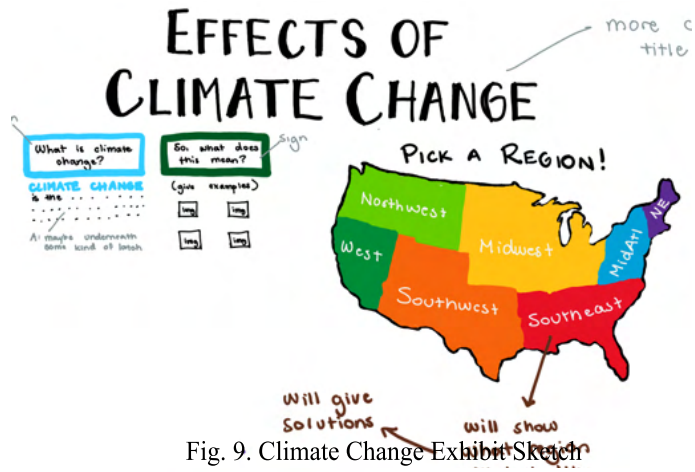

Fig. 9. Climate Change Exhibit Sketch

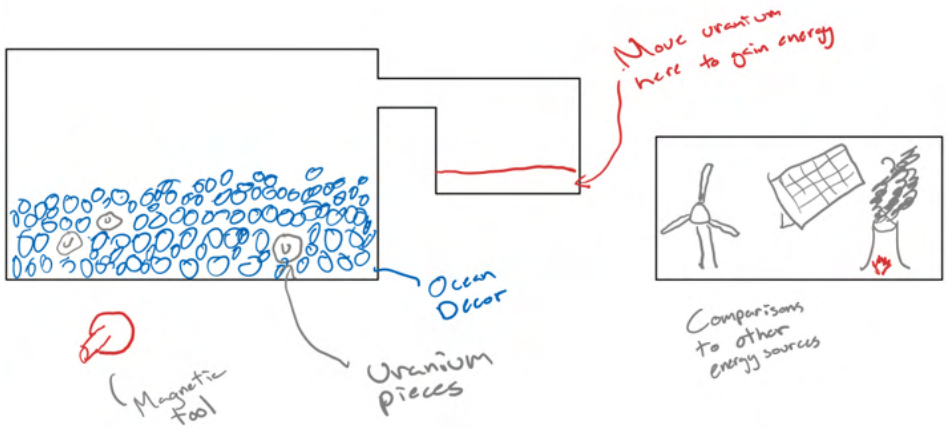

Fig. 4. Nuclear Seawater Extraction Exhibit Sketch

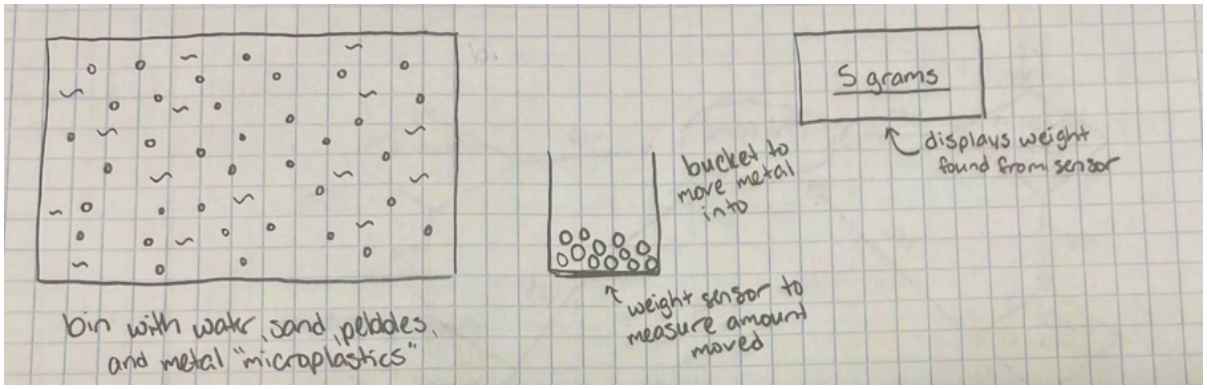

Fig. 3. Microplastic Extraction Exhibit Sketch

Decision Making

After sketching each of our individual exhibit designs, we used a Kepner-Tregoe Analysis Chart to decide which idea we would move forward with. First we had to decide what we found were the necessary qualities to have for our exhibit. We found these qualities to be: transportable, accessible, gender-inclusive, and game-based design. Based on these necessities, we could eliminate the ideas illustrated in figure 8 and 9 as the stormwater management exhibit was not transportable and the climate change exhibit was not game-based. Then we discussed as a team what qualities we wanted to have in our exhibit and ranked them on a scale of 1-10 on importance. These qualities as well as their given values can be found on Appendix B. After deciding these values and assigning a number to each of these qualities, we found the nuclear seawater extraction exhibit to be the best solution to the wants and needs of our stakeholders. This was mainly due to the fact that the nuclear seawater extraction exhibit was more interactive and had a more clear goal for the children to achieve through the exhibit. In this exhibit, the user would use a magnet handle to move marbles (which represent uranium rods) into a nuclear smoke stack to produce power. Once the marble was deposited into the nuclear tower the marble would roll back while LEDs would light up and after a certain amount of time, their score of how much power they produced would appear on an LCD screen.

Implementation of Design

Milestone Three:

In this milestone, we were tasked to create a cardboard prototype of our design. Before construction of our prototype, we met as a team to discuss the feedback from the previous town hall meeting. We learned it was essential for our exhibit to automatically reset and we worked to create a solution. Our solution was to create a ramp behind our exhibit where the marbles would flow into a fall down a series of pegs back into the play area so it would be randomly distributed. We also included a tumbler feature which would rotate the marbles as well as the plastic rocks in the exhibit. Another important element we decided on was to make it two player optional. To do so, we included another section which represented wind energy through spinning a wheel. This would show a direct comparison to a type of renewable energy that children most likely have been exposed to previously and would understand. Before we began construction, we first designed an AutoCAD sketch of our exhibit which we would use the dimensions of when creating our cardboard prototype (Fig. 10).

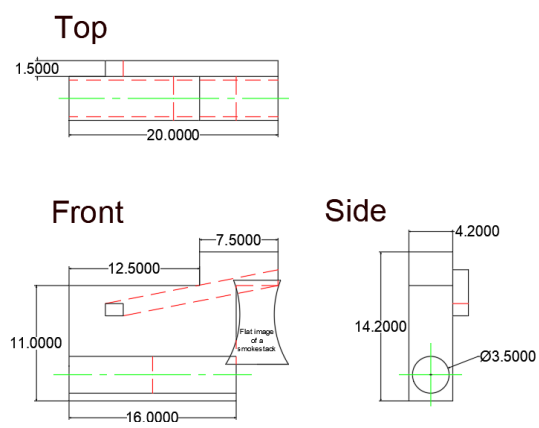

Figure 10: Nuclear Exhibit AutoCAD Sketch

With this new solution in mind, I was able to gather enough cardboard from the recycling bins in my dorm and I brought them to FYELIC where we would construct our

prototype. We used the dimensions from the AutoCAD sketch and built our box accordingly. To construct the wheel of the prototype, we cut out two circle pieces and many small rectangles that would go around the edges to connect the two circles together. We also cut out a small hole in the circle where we inserted a pencil that worked similar to a handle that could be used to spin the wheel (Fig. 8).

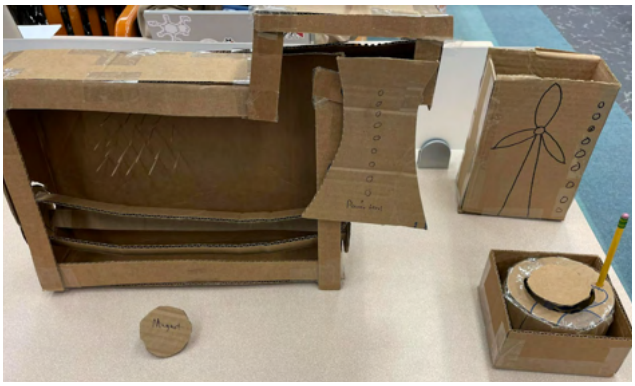

Fig. 8. Cardboard Prototype

Milestone Four:

After presenting this prototype to our peers we received a lot of important feedback, most notably our exhibit was very complicated. This was the opposite of what we wanted our exhibit to be as we wanted to portray a clear and concise message. Also if college students were confused with our exhibit, how could we expect our target audience of 10 year olds to understand our message. This was the main topic of conversation when we met with our mentor, Carrie, the next day. Together, we consolidated our exhibit from one very complex idea into three simple sections. In this new design, there would be three sections which each represented a renewable energy source: nuclear, solar, and wind. The goal of this exhibit would be for the user to discover which energy was the most efficient through three minigames that would lay flush to our poster board (Fig. 11).

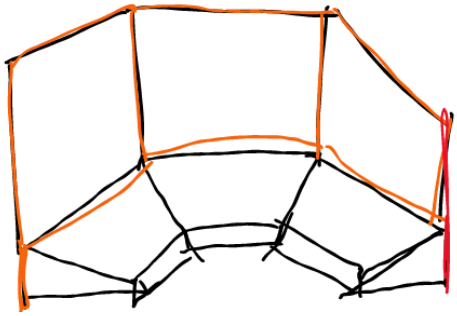

Fig. 11. Pre-Construction Design Recommendation by Carrie Tam

With this new sketch, we were able to construct our design in SOLIDWORKS. We would use the dimensions in this 3D model (Fig. 13) for the dimensions of the boxes we would use in constructing our exhibit.

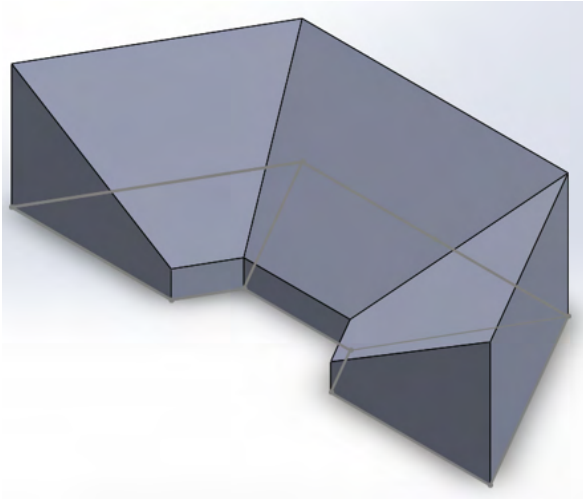

Fig. 13. New Exhibit Design SOLIDWORKS Model

With these new dimensions, I was also able to make AutoCAD sketches of the elements we would laser-print. These included items such as a solar panel, the wheel for

the wind exhibit, as well as the nuclear tower for the nuclear exhibit (Figures 25,14).

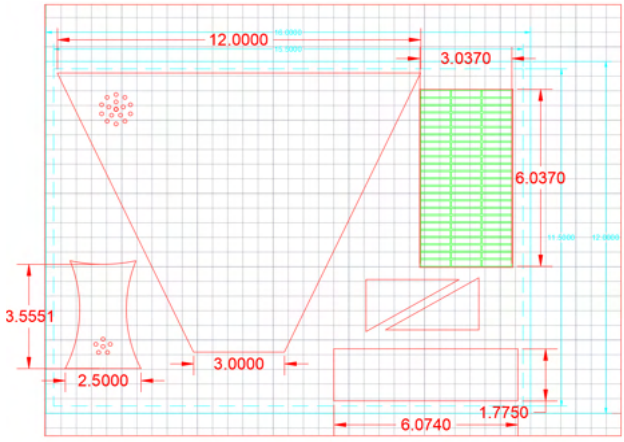

Fig. 25. Solar Component AutoCAD Sketch

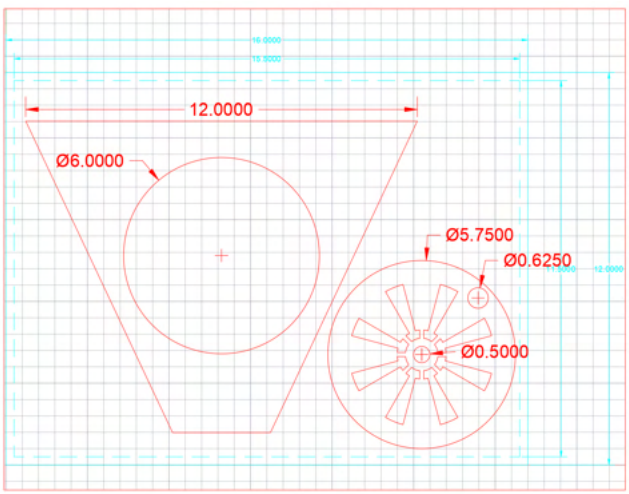

Fig. 14. Wind Component AutoCAD Sketch

With our laser cut pieces, we were able to create our final wooden prototype of our exhibit. We used hinges to attach the sides of the boxes together and wood glue for the front and top of the boxes. Along with the construction of the boxes, we added a PVC pipe that would be our handle, a large nut and bolt in the center of the wheel, and marbles into the nuclear section of our exhibit. This final wood prototype can be seen in (Fig. 18).

Fig. 18. First Wood Prototype of Exhibit

Milestone Five:

In this milestone, we were tasked with completing 90% of our museum exhibit by the end of this week. Going into this milestone, we defined this 10% to be the overall aesthetics of our exhibit as well as any unforeseen problems. After our previous town hall meeting, we received important input which was that the user would not feel as though they are achieving a goal with our exhibit. As a result, we met with our mentor, Carrie, and we discussed different ways to have the user complete a goal. The resulting solution was to create a map leading to Boston which the user would light up through the power they collect with our three exhibits. This map will be

featured on our poster board as illustrated in (Fig. 26).

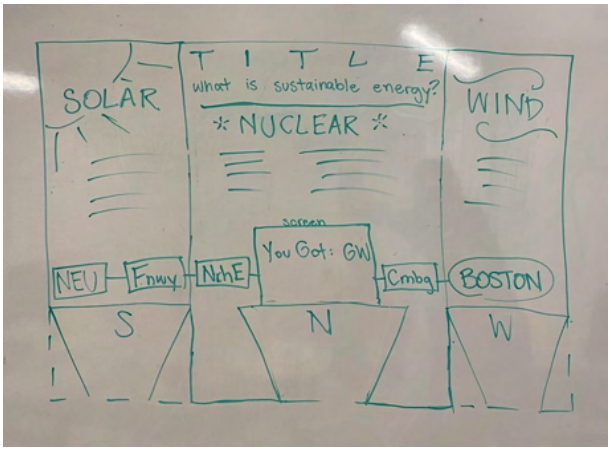

Fig. 26 First Planned Trifold Design by Katie Tschoepe

Another slight adjustment we made to our design was to the solar section of our exhibit. Previously, the user would have to press and hold a button to produce power, but we changed the LEDs inside the sun to turn on and off randomly and when they were lit up and the button was pushed, the user would produce solar power.

With these ideas in mind, we set into the construction and development of our exhibit. Firstly, we removed the back wall of each of our boxes as they would now be flush to the trifold. Also the wires would be able to flow easier between all three sections if the back was completely open. We also included a small lever below the nuclear tower in the nuclear section which could be lifted by the user to reset the exhibit. We then were able to cut down the PVC pipe on the wheel of the wind exhibit and attached our 3D printed handle with a ball bearing inside to it (Fig. 30).

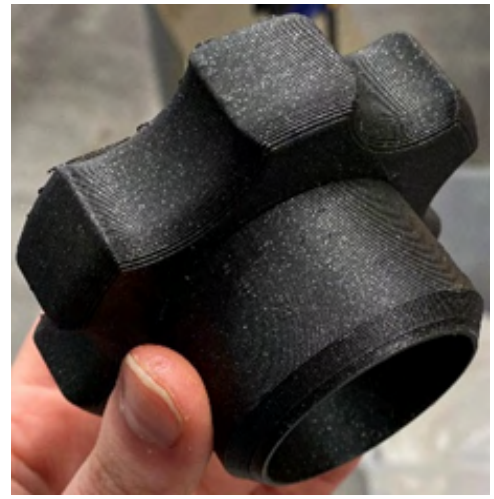

Fig. 30. 3D-Printed Wind Component Handle

Next, we began the soldering and wiring process. For easier use, we placed a breadboard within each of the three sections that would each have a power and ground going into each of them (Fig. 34).

Fig. 34. Wiring of Wind Exhibit

This allowed for less confusion as the wiring of each section was completely separate from each other and we could focus on one at a time.

Lastly, we used Mod Podge to paste cardstock paper onto our exhibit. This cleaned up any sharp edges of our exhibit and also made it look more cohesive as it was no longer completely wooden (Fig. 23).

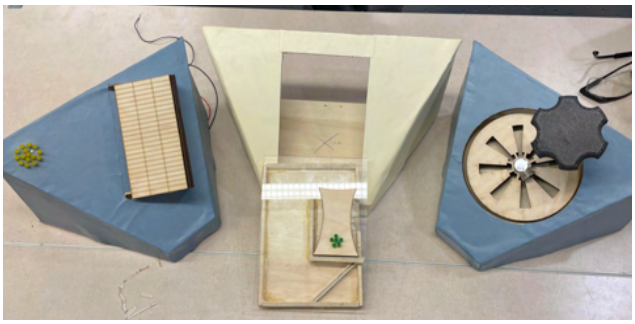

Fig. 23. Wood Prototype of Exhibit with Color

Final Design

In the final design of our exhibit, we found it was necessary to add a theme to our exhibit as it would make our exhibit more welcoming and friendly to children. We decided to implement the theme of Tim and Moby from BrainPop into our exhibit. We used some of the information from their videos to be displayed on our poster as they use kid friendly language, so we thought BrainPop would be a fitting theme for our exhibit. We also decided on a color scheme so our poster and exhibit would look cohesive. We defined solar by the color yellow, nuclear by purple, and wind energy by blue. This remained consistent throughout the final aesthetics of our exhibit including our GUI.

Finally, I repainted our exhibits to match our color scheme and to make them a brighter color. We then laser-printed all of the locations in Boston onto acrylic as well as wooden holders for the locations. Inside each wooden holder was a small strip LED that would light up the acrylic from the base. We then printed our poster onto a large sheet of paper and then used Mod Podge to paste it onto our poster board. This is the final design which was featured in the Curry Student Center on Friday, December 3rd and in the Boston Museum of Science on Saturday, December 4th, 2021 (Fig. 31).

Fig. 31. Final Exhibit at the Museum of Science

Evaluation of Design

To receive a proper evaluation of the effectiveness of our museum exhibit, we created a feedback survey which would ask the user the following questions:

- Were you able to engage with all sections of the exhibit?

- On a scale of 1-10, how much did you enjoy the exhibit?
- Which of the three sections was your favorite?
- Rank these power sources (Nuclear, Solar, Wind) from least to most efficient.
- Do you have any feedback on how to improve this exhibit?

According to this feedback survey, all users were able to engage with all sections of our museum exhibit. Some other important stats from this survey include: an average enjoyment rating of 9.125/10, 72% of users found the nuclear to be the most fun section, and 87.5% of visitors correctly stated that nuclear energy is the most efficient of the three sources. After our first exposition at the Curry Student Center, we received very useful feedback that our directions weren't clear enough to the user. Because of this feedback, we were able to adjust the GUI for our next display at the Boston Museum of Science to tell the user instructions before they played our exhibit. However, most of the feedback received was very positive and reflected our main goals of our exhibit being interactive and educational.

Individual Contributions

Milestone One:

In milestone one, I researched the existing market of museum exhibits. This research later assisted in ensuring our museum exhibit was accessible to all visitors. I also contributed my ideas into possible topics to create our exhibit off of.

Milestone Two:

In milestone two, I conducted more specific research into microplastics and a possible museum exhibit design. Although we did not go forward with my design (Fig. 3), my idea of using magnets remained throughout the project and into the final design of our museum exhibit.

Milestone Three:

In milestone three, I served as the project manager for the upcoming milestone. I was responsible for creating a plan of action of when we would meet and what we would accomplish in each of those meetings. This was vital as we needed to improve upon our design from the previous milestone and create a complete cardboard prototype within a short timeline. I was also responsible for organizing our team's status memo, design notebook, creating an hours table, and preparing a short PowerPoint which would be presented at our next town hall meeting. As a leader, I did a great job in keeping everyone organized and communicating what needed to be done by when. I created a fair timeline and was honest with my teammates about the work that needed to be done. One of my downfalls as a leader, however, was not looking into the small details. In this milestone, I was responsible for the submission of our work and I submitted the wrong link instead of our design notebook. I take full responsibility for my mistake, but it taught me a valuable lesson that I made sure to never repeat.

Milestone Four:

In milestone four, I was responsible for many of the AutoCAD elements as well as the construction of our exhibit. Nick and I constructed the outside of the three boxes. I personally made the box that would go within the

nuclear section and I cut a hole in the center of the nuclear exhibit where the inside box would lay flush to. I also created all of the wooden laser-printed components on AutoCAD. I designed the top of both the solar and wind exhibits, the wheel in the wind exhibit, the nuclear tower, and the solar panel (Figs. 25, 14).

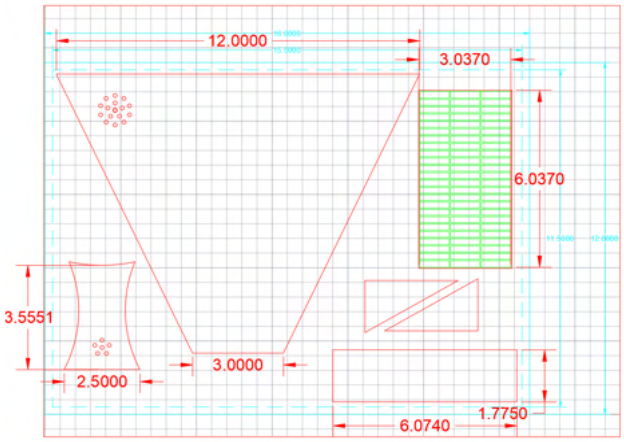

Fig. 25. Solar Component AutoCAD Sketch

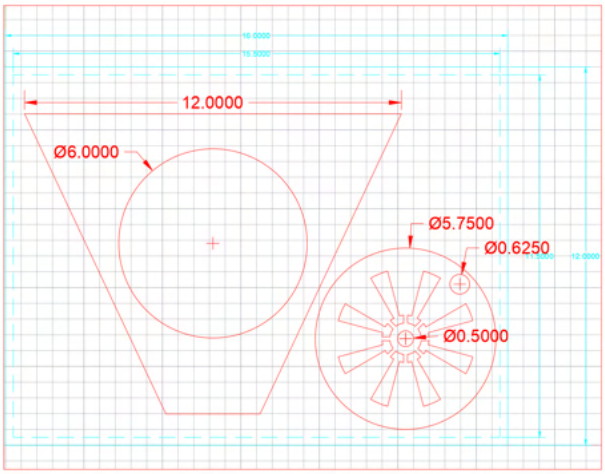

Fig. 14. Wind Component AutoCAD Sketch

To build the wheel for our wind exhibit, I printed the wheel three times and used wood glue to attach them together. I then inserted a PVC pipe that would act as the handle for the wheel as well as a nut and bolt into the center of the wheel to ensure smooth rotations (Fig. 15).

Fig. 15. Wind Energy Wheel

Milestone Five:

In milestone five, most of my time continued into the construction and design of the exhibit. Much of this time was spent creating solutions to the issues we were facing with the nuclear exhibit as the motion sensor could not read the marbles and I tried to create a working lever to reset this portion. I also assisted with the wiring components of the exhibit and ensured the flow of power was organized through all three sections of the exhibit. At the end of this milestone, Katie and I were also responsible for writing the status memo for the week and updating our design notebook.

Milestone six:

In milestone six, I remained with my construction responsibilities and ensured all of the mechanics and hardware were cooperative. After assistance from KSG, I found the solution to the nuclear exhibit and created a seesaw that would be flipped once the marble passes

through the channel. This would activate the motion sensor on the side of the box. I also worked with Katie and Zeynep to finalize the design of our poster and I set in place a color scheme that would be used throughout the aesthetics of our project. After this, I was responsible for all of the painted aspects of our project. I painted the outside of every box, the holders for the locations in Boston, and the following aspects of each section:

- Wind: wheel and PVC pipe
- Nuclear: inside of box, nuclear tower, and small box which covers inside ramp
- Solar: solar panel (Fig. 35) and sun (Fig. 36)

Fig. 35. Painted Solar Panel on Solar Energy Exhibit Component

Fig. 36. Painted Sun with LEDs

1.13 FINAL DESIGN

In our museum exhibit design, we have children create power through wind, solar, and nuclear energy to be able to light up all of Boston. To do so, we made three separate boxes that each represent a renewable energy source. For the solar section, while the LEDs in the sun are lit up, the user can press and hold a button to collect solar energy. This educates the user on the actual functionality of solar energy and how solar panels can only capture energy when the sun is shining. For the nuclear section, the user moves marbles, which represent uranium rods, into a nuclear tower to generate power. This emulates the use of uranium in these factories and displays a simplified process that the user can easily grasp and understand. For the wind section, the user is able to spin a wheel with a windmill design, which emulates the rotational energy that wind turbines create as air moves past. All of these sections cooperated to provide an overall lesson on how effective these methods of generating energy are when compared to each other. As the user generated energy, the locations on the board would light up, providing the user with a goal, and driving the user to analyze the performances of the different methods as they try again to reach a higher goal.

NUCLEAR ENERGY

The nuclear energy exhibit is a trapezoidal box that fits into a 15” by 9” rectangle. Inside, yet flush to the top of the box, was a 6” by 8” rectangular box with a piece of clear plastic acrylic attached to its top. On top of the acrylic, is a laser-printed nuclear tower with dimensions of 3.5551” by 2.5” with 6 LEDs (Fig. 25) that light up when the user moves a marble into the tower. The LEDs were soldered onto the backside of the nuclear tower using copper tape. Below the tower, is a 2.5” by 2” box to cover a ramp built to allow the marbles to roll back for the user to magnetize again. Inside this rectangular box are 9 marbles for the user to magnetize as well as small rectangular wood pieces that create a path to the top of the nuclear tower. Once the marble is released, it rolls through a simple seesaw structure (Fig. 24), which activates a motion sensor on the side of the box.

Fig. 24. Nuclear Marble Box Lever

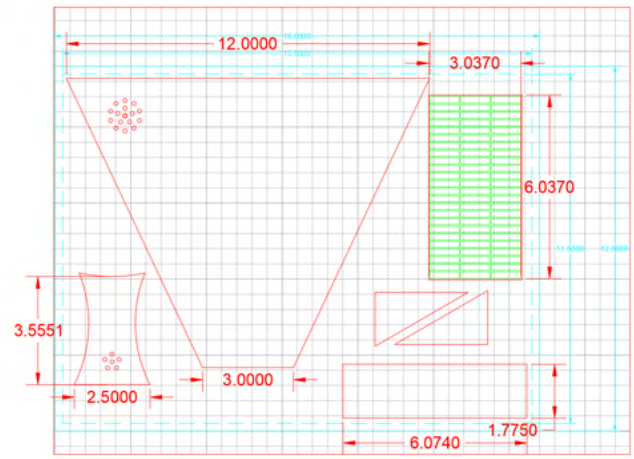

Fig. 25. Nuclear and Solar Components AutoCAD Sketch

Wind Energy

The wind energy exhibit is a trapezoidal box that contains a ¾" thick wheel with a 6" diameter (Fig. 14). The wheel has spokes and a center, and it was laser cut from wood purchased at the Northeastern University bookstore. The wheel was connected with a nut and a bolt to a wood base housed within the box, angled at 45° to be parallel to the outer surface of the box. There was a hole in the outer edge of the wheel through which a PVC pipe was placed to spin it.

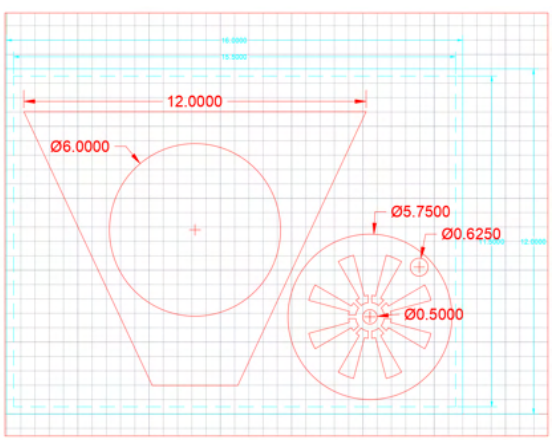

Fig. 14. Wind Component AutoCAD Sketch

To make spinning the wheel easier, we 3D-printed a black knob (Fig. 30), attached a ball bearing, and connected it to the top of the PVC pipe.

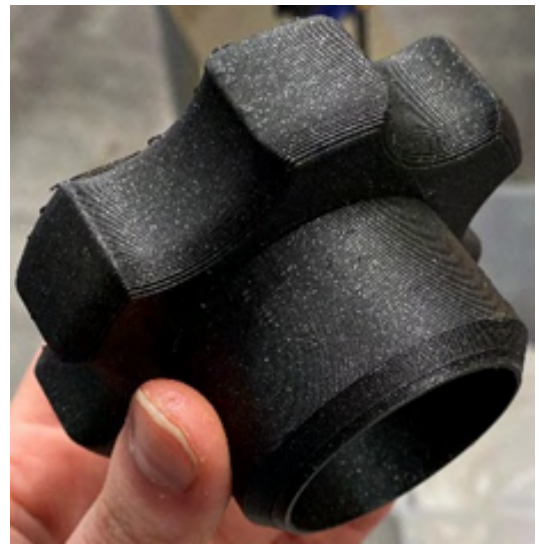

Fig. 30. 3D-Printed Wind Component Handle

In order to count the number of times the users spun the wheel, we placed eight small magnets on the circumference of the wheel and a Hall Effect sensor within the box so that every time the wheel was spun, the sensor detected the magnets approaching it. Finally, we painted the box light blue, the wheel and PVC pipe silver, and glued a printed image of Moby skydiving on the side of the box that faces the viewer (Fig. 37).

Fig. 37. Final Wind Component

Solar Energy

The solar energy exhibit is a trapezoidal box that would fit inside of a 5” by 9” rectangle. The exhibit consisted of a button that was created with a 3D printer (Fig. 16) along with 5 LEDs in a sun formation and a laser cut solar panel model (Fig. 25). These three components sat on the top of the box that was angled at 45 degrees. The button was a 3D printed piece that was placed over a sparkfun button and filled with pieces of a kitchen sponge that created an elasticity between the button cover and the box (Fig. 3). The LEDs were soldered together using copper tape on the inside of the box and then coded to randomly light up and turn off. While both the light was on and the button was pressed, the code would register the user gaining solar energy. Our final solar exhibit component can be viewed below (Fig. 38).

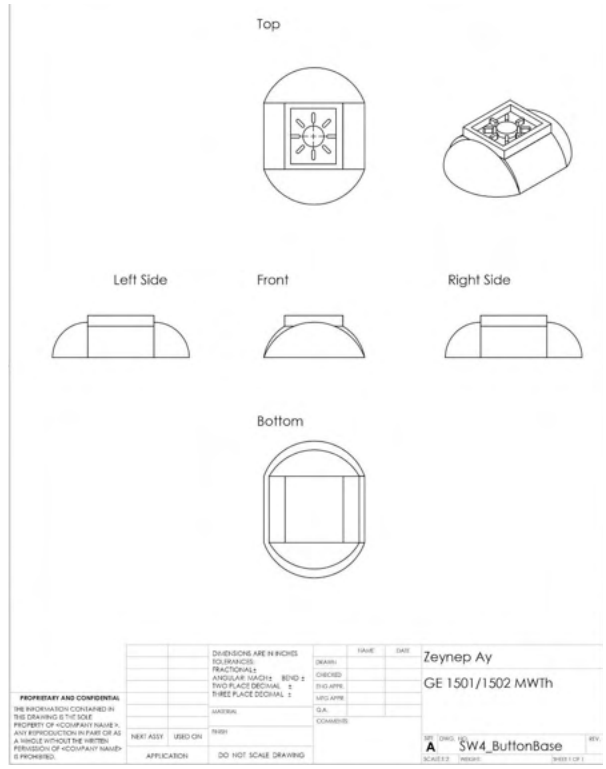

Fig. 16. SOLIDWORKS Button Sketch

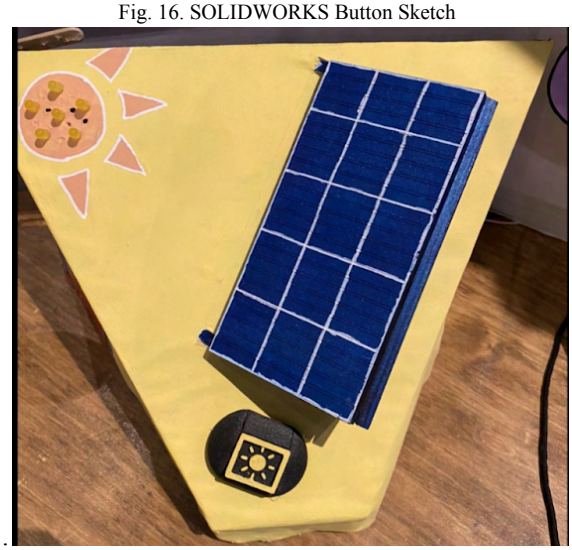

Fig. 38. Final Solar Component

Code and GUI

The first visual cue that the GUI provides is a screen with a start button. This can be viewed in the GUI section of Appendix E Once it is pressed the user receives a few instructions that are as follows:

1) You have 1 minute to make as much power as possible. Can you power all of Boston?
2) The buildings on the board will light up as you make energy!
3) For wind, use the handle to spin the turbine and generate power!
4) For Nuclear, use the green handle to move the uranium marbles into the factory to power it!
5) For Solar, press and hold the button while the sun is shining to capture energy!

Then the user is prompted with a countdown before the game begins. In this time, all of the necessary initializations will occur including the distance sensor and the RedBoard itself. After the countdown finishes, the code enters a for loop that runs for a minute using the calculated time that was necessary to run through the code once. The first act inside this loop is reading the distance from the ultrasonic sensor. The code then uses this value to determine if a marble has been detected, and that in the last run through the loop, a marble was not detected. This ensures that one marble does not cause the code to count two marbles collected. If these conditions are satisfied, the code adds a marble to the counter and sets a counter for the nuclear tower light that turns it on and keeps it on for 6 cycles (1.2 seconds). It then reads in the distance again to be referenced in the next run through. The code then moves on to reading the hall sensor in a similar fashion. If a magnet is detected, and was not detected in the last run through, then the counter for spins is raised. Next, the solar exhibit has a random number between 2 and 7 for how many seconds the sunlight stays on or off. There is a counter that switches between on and off every time the miniature timer runs out. This timer is reset with the random number and proceeds to count down with a line that depreciates it every run through. The code then checks if the button is pushed, and if both the button is pushed and the sunlight is on, then the counter for seconds is increased by 0.2. The last thing the code does inside this loop is update the timer visual on the GUI and display the current energy values on the meters present on the GUI. It also checks the thresholds for the LED strips and lights up the locations on the board respective to their energy thresholds. Everytime one is lit up, a Moby beep sound is played as well. This visual can be seen in the GUI section of Appendix E. After the timer runs out, this loop is terminated and a new visual shows up on the GUI. The code calculates and displays the percentages that each source provided to the total energy along with the total energy. The final GUI screen (seen in GUI section of appendix E) prompts the user to think about their results and stays on for 15 seconds before returning to the start screen. From there, this process repeats when the start button is pushed.

Wiring

The wiring for this project required 2 groups of 5 LEDs, a button, a motion sensor, a hall sensor, and 5 LED strips to be wired. To make all three exhibits work off of one redboard, we placed one breadboard in each of the three exhibits. This allowed required electronic components to stay wired in transportation. The three components were

connected with wires that ran from the two side breadboards to either the center breadboard or the SparkFun RedBoard itself.

For the groups of LEDs, copper tape was utilized to create two singular points for all of the positive and ground pins to conjoin without interfering with each other (Fig. 39.)

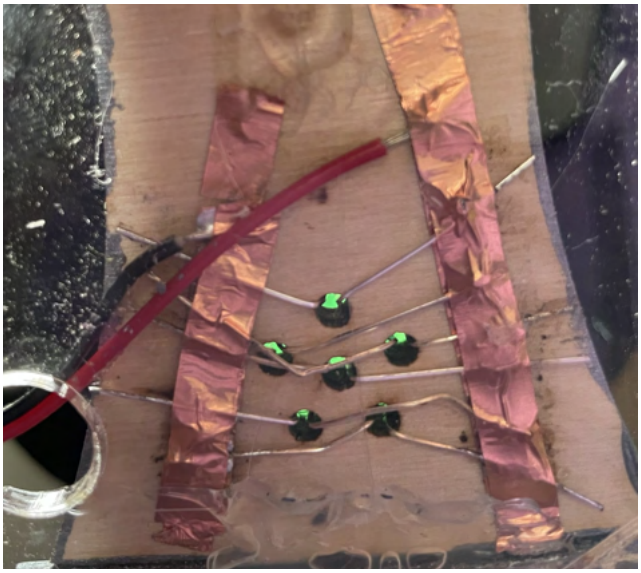

Fig. 39. LED Solder Work

For the button, wires were soldered for power, ground, and the sensor pin to a sparkfun button with a resistor in series. From there the button was placed beneath the 3D-printed component. The backside of the button can be viewed below in figure 40.

Fig. 40. Button Solder Work

For the motion sensor, four male-to-female wires were connected to the four pins. The outer two pins on the sensor were power and ground and the inner two pins were trig and echo. The outer pins ran to the breadboard, while the inner pins were connected to the RedBoard. This allowed the code to read in distance values.

For the hall sensor, three of the same male-to-female wires were used to connect the sensor to the breadboard placed inside of the wind component. Two of the wires ran to power and gourd while the third ran to a sensor pin on the RedBoar when fully wired.

For the five LED strips that were used to backlight the acrylic, two wires were soldered to the positive and negative. The positive ran to an output pin on the RedBoard while the ground ran to any available ground on the breadboards.

The wire diagram for all of these components working together can be seen in Appendix F.

Poster

We divided our tri-fold poster into three sections to highlight each component of our exhibit: on the left, solar; the middle, nuclear; the right, wind. Each section had a

corresponding title and two bullet points defining the type of energy and explaining how efficient it is as a

percentage. At the top of the middle section, we had the title of our exhibit, Zero Emission Energy, and defined it. We included images of a sun, an electron cloud, and a windmill to correspond with each section.

Fig. 31. Final Exhibit at the Museum of Science

Additionally, we placed images of Annie, Tim, and Moby to convey the theme of our exhibit. Lastly, at the bottom of the tri-fold, above the exhibit boxes. We had five laser cut acrylic pieces stuck in small, rectangular wood boxes containing LED strips that lit up as the user produced power using the exhibit games. The acrylic pieces, from left to right, consisted of Northeastern University, Fenway Park, a building in the North End, Harvard University's Annenberg Hall in Cambridge, and the Boston skyline. The full exhibit, including the tri-fold poster can be seen above (Fig. 31).

1.14 Results

Performance

During our exhibit presentations, the marbles within the nuclear exhibit performed as expected, with one incredibly magnetic marble, while the rest worked when the former marble got stuck. The LEDs on the nuclear tower lit up when the marble was dropped by the user. For the solar component, the LEDs turned on and off randomly, and the button read when the button was pressed and the light was lit. When the users spun the wheel on the wind component, it calculated all of the spins correctly; however, we needed to hold down the base of the box, despite having as much sand inside of it as possible to weigh it down. The laser-cut acrylic pieces worked as planned: they lit up throughout the user's game as they produced power using the exhibit. Our programming and wiring worked as well, calculating how many marbles were dropped, how long the button was pressed, how many rotations were completed, and calculating inputted data as gigawatts of energy. When fully set up, our exhibit consisted of the tri-fold, the wind energy component, the nuclear energy component, and the solar energy component (Fig. 28). The wind and solar components had the following measurements:

Trapezoidal Base: 12" x 9" x 9" x 3"

Trapezoidal Cap: 12" x 10.53" x 10.53" x 3"

Height: 6.96" (back); 1.5" (front)

The nuclear component had the following measurements:

Trapezoidal Base: 15" x 9" x 9" x 6"

Trapezoidal Cap: 15" x 10.53" x 10.53" x 6"

Height: 6.96" (back); 1.5" (front)

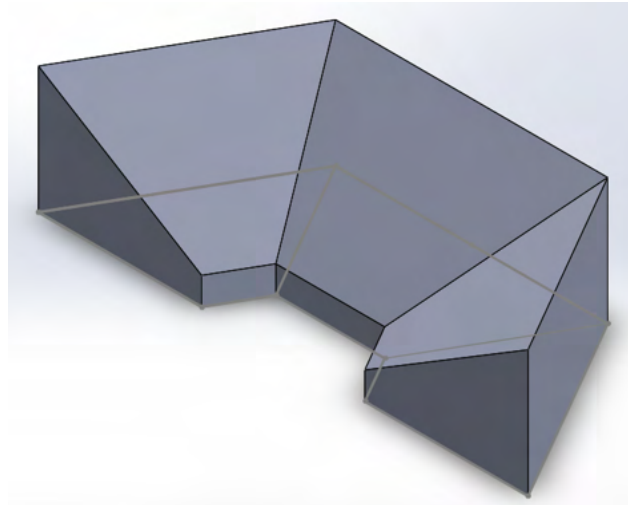

Fig. 28. New Exhibit Design SOLIDWORKS Model

Feedback

In our feedback survey given to the visitors following their interaction with our exhibit, we asked:

- Were you able to engage with all sections of the exhibit?
- On a scale of 1-10, how much did you enjoy the exhibit?
- Which of the three sections was your favorite?
- Rank these power sources (Nuclear, Solar, Wind) from least to most efficient.
- Do you have any feedback on how to improve this exhibit?

According to this feedback survey, all users confirmed that they engaged with all components of the exhibit, and, on average, rated the exhibit as a 9.125/10. 72% of visitors claimed the nuclear component as their favorite, and 87.5% of visitors correctly concluded that nuclear energy was the most efficient out of the three simulated energy sources. Following the first presentation of our exhibit on Friday, December 3rd, 2021, our most helpful feedback

was to provide more detailed instructions for each game, to weigh down the wind exhibit more, and to have sound effects throughout the game. We responded to all of this feedback and improved our exhibit before presenting it at the Boston Museum of Science on Saturday, December 4th, 2021.

Comparisons

As compared to other groups, our exhibit had many hands-on activities. Many other groups included buttons with predetermined possible solutions to their problem, serving as more of a trivia or Q&A exhibit. Our exhibit allowed the user to decide how they would like to spend their limited time. By including a time limit in our exhibit, the user wanted to play again to try and beat their score or see how much they can power with only one type of energy. Our design also included many different light features to reward the user while they are playing with the exhibit. Many groups included sound elements to keep the user's interest, while we included sound in addition to many LED elements. For instance, if the user created enough power, a location in Boston would light up to show their progress.

You are providing information for the reader and no analysis. You are setting up for your discussion where you can then argue or defend the output of your engineering design cycle using this information. For now, let the reader come to their own conclusions without referencing any design constraints or requirements. This section is not for you to state that your prototype meets the design requirements but to rather put forth all data and let the reader make that determination. You need to just let the evidence speak for itself for now. When you get to the discussion section, then you use it to start making your case.

Zeynep Ay

1.15 Discussion/Analysis

Results

Before presenting our exhibit to our primary client, the Museum of Science, Boston, our team first presented our exhibit to the Northeastern University Student Body and Faculty. This was presented on a 36” by 28” table in the Curry Student Center. Our team had a few judges come around and critique our exhibit with comments. We also had a set-up google form for people based on these comments as well as my own observations. The exhibit received a 9.125/10 rating on overall enjoyability and led to 87.5% of users correctly identifying nuclear energy as the most efficient zero emission energy source. I will lay out the strengths and weaknesses, as well as the overall success of our design based on the user feedback and personal interpretations.

Strengths

We had many comments from users who said that the overall quality and user experience of the exhibit was definitely the highlight of the exhibit itself. One commenter noted that the fabricated elements were very clean and easy to interpret. One other commenter mentioned that the engagement with the exhibits also enhanced the overall experience with the exhibit. This was done with the interactive elements, and solidified our efforts to make the exhibit more game-based. Another strength of our exhibit was the success rate in which it communicated our overall goal, which was for people to understand that nuclear energy is the most efficient and therefore destigmatizing the perception of nuclear energy in general.

Weaknesses

Personally, I felt as though we could have done more to point out to the users that nuclear energy is the most efficient form of energy. Although 87.5% is more than satisfactory, it is still a lower number than I personally anticipated. Another commentator felt as though it was a bit difficult to understand how to play the exhibit, even after implementing instructions into our GUI. There were also some instances where the wind energy portion of the wheel would shake, and in one instance break when being spun with brute force, which could have been avoided if the wind energy design had been adapted accordingly from the beginning.

Overall Review

In general, our team fulfilled almost all aspects of the assignment, including staying under budget with a total final budget of $90.80, transporting the exhibit without any major complications, and fitting the exhibit without fault onto the intended table.

1.16 Conclusion

In conclusion I would say based on the critiques, user data, and overall feedback from our professor, our exhibit satisfied our clients needs adequately and taught children the importance of sustainability, specifically the importance of implementing more nuclear energy into our energy production.

Results

As stated earlier, The exhibit received a 9.125/10 rating on overall enjoyability and led to 87.5% of users correctly identifying nuclear energy as the most efficient zero emission energy source.

Challenges

One of the major challenges our group and I faced was the issue with the motion sensor not sensing the marbles as they passed. At first, we thought it may have had to do with the code, but after further inspection we realized that the real issue was the shape of the marble itself. The way that the motion sensor works is that it sends out a trig signal, and receives the echo of that original signal back once it hits an object, and the time it takes for that echo signal to be returned is then used to find the distance traveled. Since the marble is circular, our team concluded that the signal was bouncing in a random direction due to the shape of the marble itself. After this, we agreed that a lever system that triggered the distance sensor would be the best option, but considered some backup planes, such as using the hall effect sensors to be triggered by the magnets contained in the Nuclear handle, and possibly borrowing some PIR sensors from another group.

Eventually, we were able to get the lever system to work with the rest of the exhibit:

Fig. 24. Nuclear Energy Lever system

Another issue our team had to deal with was the timing of

the code. There seemed to be multiple instances where the actual timing of the code would be elongated for longer than anticipated. This was eventually tracked down to be due to the initializations of the code.

Concluding Remarks

In general, I would say that our exhibit was a success. Seeing the children interacting with the exhibit, and replaying the games was one of the highlights of this entire process. It was also interesting to see some fellow advocates for nuclear energy asking questions and informing us further on the topics we had taken the time to research, which was very inspirational. Some parents were even learning about nuclear energy for the first time, which was also very interesting to see. Overall, the exhibit was a fun and educational activity for the children of the museum and gave us a lot of joy to present. In conclusion, I would

like to thank our clients, the Museum of Science, Boston,
and our Professor for giving us the opportunity.

1.17 Recommendations

Although I would say our museum exhibit was a success, there were many things in which I wish we had done differently. Some of these setbacks could have been avoided if our group did not have some intellectual blocks.

Intellectual Blocks

At the beginning of this process, there were certain subjects our group was not 100% familiar with. This was due to the fact that some of the necessary skills for this exhibit were things we were learning as we worked on the exhibit. For example, none of us knew how to use MatLab app designer before this project. After watching a few videos on how to use it, however, we were able to adapt the code into the GUI. The GUI itself took a lot of figuring out, and if we had been familiar with it beforehand there may have been less time wasted in this department.

Regrets & what I would do different

In all honesty I am pretty satisfied with the amount of time and effort I put into this project, however if there is one thing I wish I had done from the beginning is I would have voiced my opinion/feelings to my teammates more often. In terms of design, I regret that we did not implement the GUI and the light-up acrylics sooner into our design, since these two elements took up a large amount of our time in Milestone 5 and 6. I also wish we had logged some more photos of the actual construction of the exhibit.

Recommendations

For future Cornerstone students, my biggest recommendation would definitely be to identify what each teammate is good at, and split work according to each individual's strengths. During milestone 4, my team implemented this very well. As someone who leans more towards the coding and hardware elements as opposed to the design and construction elements, it was nice to have it so each person was working on what they were good at. I also felt as though during Milestone 4 is when our team really felt like a team. Another recommendation is to teach each member of your group with respect, and realize that not every group member is perfect and has their flaws. Also, understand what each teammate's challenges may be; do they have a disability that may make it difficult for them to get to meetings on time? What are their cultural backgrounds? Are they an international student? How does their background influence how they act? etc etc. This is something I wish my teammates and I spoke about more openly at the beginning of the project. Another recommendation is to not be afraid of confrontation. As someone who dreads confrontation myself, learning how to deal with awkward moments was a key take-away from this entire process.

1.18 Lessons Learned

For the purposes of evaluating the lessons learned during this process, I will express my personal contributions, the reflections of my learning, the reflections of my team's work, and our resources.

Contributions

Milestone #5

For milestone 5, our team had to complete 90% of our exhibit. My personal contribution to this was converting the original Arduino code into MatLab, learning how to use Matlab App Designer, rewriting the code into MatLab App designer, and then testing all of it with the assembled hardware. Although the solar portion of the exhibit was working, the wind energy portion could be more accurate (this was solved by acquiring a more effective hall effect sensor and more magnets), and the nuclear energy portion was not working due to the aforementioned issues. I was very proud that I was able to create the GUI and adapt to the MatLab. For this milestone, each team member also had to 3-D print a component that would be used in the Museum exhibit. Mine was the Button for the solar portion. The purpose was that as the sun in the corner of the exhibit would light up, the user would have to push down the button, hence creating "solar energy" Originally, I printed the following design:

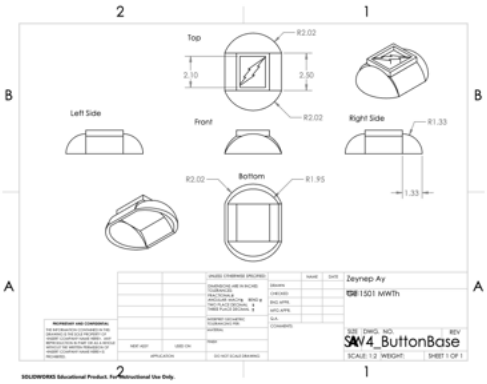

However, this was eventually adjusted to the following design:

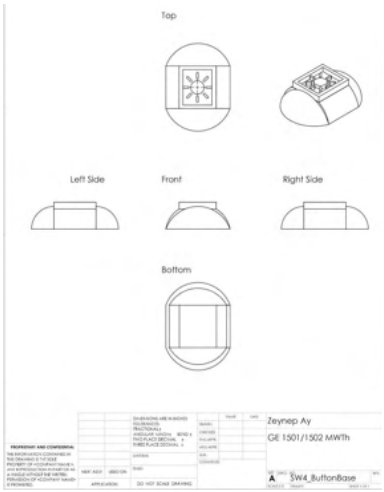

Milestone #6

Over Thanksgiving break, I worked with the PIR sensors and hall effect sensors to test if this could be an alternative to the lever system we eventually implemented. I also helped working on adapting the GUI, and helped with soldering and construction a minimal amount.

Resources

Our group had an overall budget of $100, which we met by only spending $90.80. I personally bought various electrical components from Amazon Prime, and this was my personal contribution in terms of buying the resources.

Fig. 16. Solar Energy Button SolidWORKS Draft #1

Fig. 16. Solar Energy Button SolidWORKS Draft #2

I also offered up my SparkFun kit for us all to use, and bought some of the pieces of wood for construction.

Reflections on Learning

This project has helped me refine my coding abilities, my time management skills, my soldering abilities, and my abilities to communicate with others. Coming out of a time where I had very limited interaction with other individuals Due to the pandemic, it was definitely interesting to be in a project that required me to communicate with other individuals on a regular basis. I felt as though I learned the value of communication above all other things. As someone who

Reflections on Working in a Team

I felt as though the overall team dynamic was overall positive, but had some drawbacks. This definitely taught me how to deal with difficult individuals, communicate my feelings, and know when to talk to someone for advice on how to handle a misunderstanding efficiently. I feel as though more could have been done to communicate on my part and make clear what I was doing at all times.

As a team, we were pretty organized on multiple different fronts, this I am proud of. We set up a google drive on day 1, and organized everything appropriately from there on out. In terms of keeping some of the more physical components we were a bit more disorganized, but still were able to be maintained.

Nicholas Gorycki

1.19 Discussion

The final design for our exhibit, presented at two expositions, fit comfortably on the 36' by 28' table, fit inside of the provided transport container, and was safely transported in said container [pictured below]. The final spending was $90.80, which was under budget, and the final design implemented multiple laser-cut and 3D-printed components. Therefore, it was successful in meeting all of the original constraints stated in our problem statement.

As for the functionality of our exhibit, we surveyed users immediately after playing with it in order to assess its educational abilities. According to the survey, users, on average, rated their experience at our exhibit as a 9.125/10. This is a sufficient enough rating to conclude that our exhibit was successful in entertaining the user. Also, 87.5% of users determined that nuclear energy was the most efficient out of their three options. This is sufficient evidence to conclude that our exhibit was successful in educating the user.

Strengths

Overall, our exhibit was a successful product. All of the components successfully worked together as intended, and results showed that the exhibit was both entertaining and educational with a very high success rate. In addition, there were multiple users who, when interacting with the exhibit, stood out to me. For example, a father struck up a conversation with me as his son interacted with the exhibit. He questioned a few of the numbers that were present in the exhibit with regards to efficiency and power, which led to me explaining the calculations behind the actual energy values and how they related to actual uranium measurements, actual solar panels, and actual wind turbines. As we continued to talk about the three energy sources, he stated that he never investigated nuclear energy much, and thought the future lied in solar becoming more efficient. I believe he walked away from our exhibit with a newfound curiosity in nuclear energy. This man, along with almost every other user, proved the success of the exhibit to me personally, as it provoked discussion in a multitude of conversations. Our exhibit's ability to provoke thought in both children and adults is representative of its power.

Weaknesses

The exhibit did possess a few weaknesses in its final state. First, a few users, in the survey, mentioned that the intended use for the exhibit was mildly unclear. This could have been avoided with an alteration to the design, which I will elaborate further upon in the recommendation section. Another weakness would be the lack of resiliency. Despite weight to hold it down, and a sticky mat to prevent sliding, the wind exhibit still required a spot fix during the second exposition. The sensor was dislodged during rough use. It was an easy fix, but still showed that the final design was not perfect. However, these flaws were nowhere near enough to determine the exhibit to be a failure overall.

1.20 Conclusion

Upon completion, our product satisfied the Museum of Science's request for an educational exhibit addressing the topic of sustainability. It educated the users while keeping them engaged, adequately represented all the stakeholders, and was created within the constraints. As previously stated, the exhibit received a 9.125/10 rating on how enjoyable it was and led to 87.5% of users correctly identifying nuclear energy as the most efficient sustainable source that they had available.

Challenges

In the design process, one major challenge that we faced as a team was the redesign that followed milestone 3. After creating the cardboard prototype, the feedback we received essentially called for a complete redesign. To attain a sleeker design that was also easier to comprehend, we scrapped the design from milestone 3 and restarted with a new layout. We designed, constructed, and presented the three trapezoidal boxes that are seen in our final design (pictured in appendix G titled "Finished Wood Prototype of Three-Component Exhibit") over the course of 4 days. This was one of the most trying milestones of our project, and the pressure that we felt resulted in the creation of an ideal ground layer for the rest of the project to build upon.

Another major challenge was getting the nuclear portion of the exhibit to function as intended. The first attempt at implementing the distance sensor to count the marbles the player would collect was a failure. After some investigation it became apparent the sensor was incapable of detecting small objects with a curve due to the nature of its function. The waves that the sensor sent out would not consistently return, as the curved surface would not allow them to bounce straight back. Another problem was that the sensor read too slowly to detect the marbles as they rolled passed. In order to solve this major issue, we worked to implement a lever system that would activate the distance sensor as the marble passed through it (Fig. 24.). Due to the confined space and 45-degree angle that the nuclear exhibit lied at, the lever required more precision than expected. Once it was working, however, it was extremely accurate. This challenge was one that caused discouragement across the board as the team worked through it, but upon success was one of the most satisfying moments of the project.

Fig. 24. Nuclear Energy Lever system

One minor challenge to note was getting the LEDs on the

solar exhibit to flash randomly. Originally, the code was running on a while loop, but when switched to a for loop, I was able to implement the lines of code pictured below (Fig. 41).

```
if solartimer<1 % this timer counts down e
    random_num = randi(5) + 2; % randomly
    solartimer = random_num;
    if mod(solarcounter, 2) == 1 % if the
        writeDigitalPin(a,led_pin,false);
        light = 0;
    end
    if mod(solarcounter, 2) == 0 % if the
        writeDigitalPin(a,led_pin,true);
        light = 1;
    end
    solarcounter = solarcounter+1; %everyt
end
solartimer=solartimer-.2; %subtracts a fif
```

Fig. 41. Solar Randomized Sun LED Code

Remarks

As the team progressed this project, unexpected setbacks occurred almost constantly, but the perseverance to make our ideas a reality was what allowed this project to come to fruition. Once the exhibit caused the first child to look at me and ask “Can I go again?” after getting all but one location to light up, the exhibit felt like a success. He turned back and used only the nuclear and wind energy, proving that my work both captivated and educated the child, and would go on to do the same to many more.

1.21 Recommendations

Reflecting on the final design of our exhibit, a few recommendations come to mind. I have broken this section up to distinguish between them.

Clarity of Instructions

One recommendation, that would apply to any exhibit development, would be to create the exhibit to be practically self-explanatory. Due to the feedback that the first exposition provided, we altered our GUI to include instructions that were easily digestible. An exhibit should not have cluttered writing and too much information needed before a user can interact with it. This will discourage potential users and result in a lack of interest. Simplification is the best way to attract users.

Research on Potential Components

One other recommendation I have is to completely understand the function of a component before attempting to implement it. In this project, we attempted to use the distance sensor that was provided in the SparkFun kit with a minimal understanding. This resulted in confusion and issues that would have been avoided with some preemptive testing and research.

Further development

If this product were to move along to become a fully developed museum exhibit, The first potential source of improvement would lie in the GUI. Even after the hotfixes performed following the first exposition, the GUI would require improvement in a few main aspects. First, the information presented using the GUI could have been more minimalistic. The text was still cluttered from a child's point of view, and the exhibit required some vocal support from the group as the users were interacting. along with some GUI improvements, the electronics would benefit from some redesigns. The distance sensor was triggered about 80% of the time from the marbles hitting the lever. With some extra time and work, this consistency could be improved to make the exhibit more professional. These improvements would address all of the weak points of the exhibit.

1.22 Lessons Learned

Individual Contributions

For organization, I have broken this section up to describe my contributions to the project for milestones 5-7.

Milestone 5

During Milestone five, I worked to complete as much of the wiring and soldering as possible while also working to construct the intricate components of the nuclear exhibit. While the exhibit components evolved a great deal, they were still not fully functional at the end of this milestone. In addition, I was responsible for creating the magnetic handle to be used in the nuclear portion of the exhibit. The SolidWorks drawing for this component can be seen in figure 42.

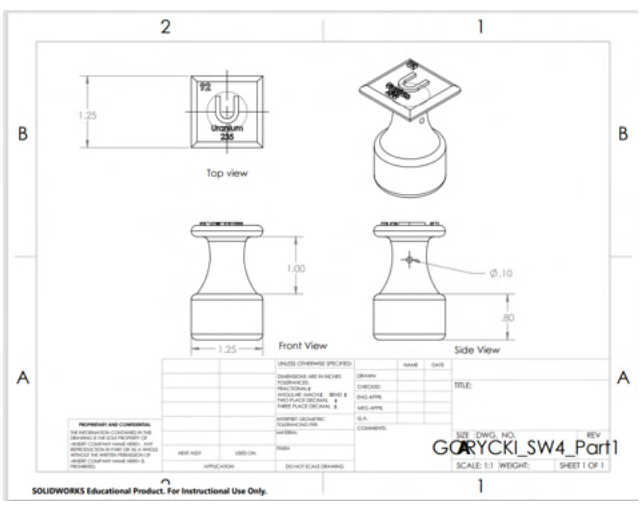

Fig. 42. Nuclear Exhibit Magnetic Marble Extraction Piece

After fabricating this component, I worked to complete as much of the GUI as possible as well. At the end of this milestone, I created a fully functional model of the three main components with code and wiring that functioned.

Milestone 6

To finish up the project, over thanksgiving break, I worked to elaborate upon the nuclear exhibit while attempting to fabricate a lever system that worked with the distance sensor. While that was unsuccessful at first, I was still able to perform some major revisions to the code that allowed it to function at its best quality. Upon my return to campus, I was able to fabricate the final model of the lever with the assistance of my team members. Once that was completed, I performed all of the final soldering on the LED strips and LEDs inside of the nuclear and solar components. I then performed all of the final edits to the code and GUI in preparation for the first exposition.

Resources

The budget of $100 dollars was met, as the group only spent $90.80 to get the exhibit up and running for the expositions. My personal contributions to this budget involved 3 separate trips to home depot where I acquired the wood used for construction, the magnets used in both the wind and nuclear exhibits, the PVC pipe used in the wind exhibit, and the hinges that were used to construct the boxes.

Reflections on Learning

From this project, I was able to test my coding, soldering, and wiring capabilities at a level that I have never performed at previously. I had minimal coding experience entering this class, but quickly picked up the slightly more

intricate details of the work as I progressed through the semester. This was one of my largest areas of improvement next to soldering. Before attending Northeastern, I used a soldering iron once, and with that knowledge I was able to solder every component in this exhibit. It took a bit of acclimation at first, but my abilities quickly improved. I am definitely proud of the improvements that I have made upon these two skills.

In terms of less quantifiable skills, I drastically improved upon my problem solving capabilities as I progressed through this project. Each issue tested my ability to generate solutions, a skill that I have developed greatly. All of the lessons I have learned from this project have been valuable to my future career, as a diversity in my abilities will always be helpful.

Reflections on Working in a Team

Through this project, I was able to learn through failure on multiple occasions. This is not necessarily a concept that I ever struggled with, however I have not had much practice with working through failure. The most challenging portion of this project was working to get the nuclear component to work with the distance sensor. After many failed attempts over the beginning of milestone six, I wiped my slate clean and started from scratch. Instead of the use of any springs or rubber bands, the team made a seesaw shape and it almost perfectly functioned. This moment was the biggest sign of the exhibit coming together. Immediately following this, everyone in the team was clearly more motivated, and solving this one problem ended up picking up the team morale greatly. From this event, I was able to see the effect that overcoming failure had on an atmosphere.

This project was definitely the most team oriented project I have worked on throughout my entire career. I spent almost every day with my teammates towards the end of this project, something I did not expect at all. I was able to become a better teammate through experience with a new set of people. As I have worked through my education, I have only been exposed to a few groups, especially because I graduated from an all-boys highschool. Working with women for the first time in four years on a group project was a huge change in dynamic. I did not necessarily have any problems, but it was a new scenario that required some acclimation.

I would say that I am a versatile and honest leader, as I worked around my group members strengths and filled in the areas that needed the most assistance. My biggest asset to the team was my wide range of abilities, as I was able to move swiftly between areas of work and solve any problems that may have come up.

Given the opportunity to start over again, I would have befriended my teammates earlier. The comfortable environment that the team slowly acclimated to was one of the best boosts for productivity. As the team became closer, the work became easier.

As I stated in the recommendations section, if more time were available I would redesign the GUI to make the users more comfortable and make the instructions easier to understand. For more information, please reference that section.

Overall, I believe my abilities as a leader and peer have improved through this project as I am now more adaptable to multiple situations. This project tested my flexibility with a team, and I believe I was able to develop that ability to a level i have never reached,

Kathleen Tschoepe

1.23 Discussion

First and foremost, our exhibit met the dimensional 36” x 28” constraint and fulfilled the transit constraint as we were able to fit all our exhibit components in the provided box with room to spare (Fig. 43). Next, we met our $100 budget and spent under the limit (Appendix I).

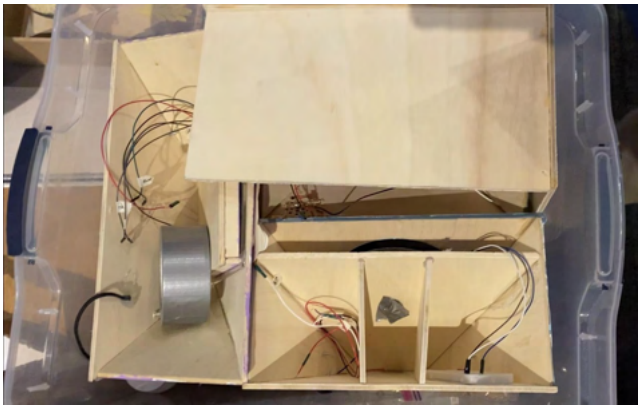

Fig. 43. Museum Exhibit Components inside Transport Container

As far as the educational and interactive component of our exhibit, both of which serve as the functions and objectives of the project within this problem, we can turn to the data collected in our feedback survey. According to our feedback survey given to users following their interaction with our exhibit, the visitors, on average, rated their experience as a 9.125 out of 10, and 87.5% of users determined correctly that nuclear energy is the most efficient. These two data results reflect two of the main goals of our exhibit: to be interactive and to be educational. Therefore, we believe that our developed solution addressed the problem presented by the client.

In qualitative observational assessment, I enjoyed watching the kids play with our exhibit. It was rewarding to see all our work pay off in a way that we knew was making a small impact on them.

1.24 Conclusion

Our solution to the problem presented to us by the Boston Museum of Science adequately taught its children visitors the importance of sustainability in engineering, beautifully displayed the intellectual integrity of its stakeholders, and fulfilled all the constraints presented by the client. Our final museum exhibit design consisted of three components that ultimately conveyed the efficiency of nuclear energy as a renewable energy source in comparison to other renewable energy sources like wind and solar energy. We received excellent feedback that demonstrated to us that our solution was both interactive and educational, the primary function and objective of this project.

The greatest lesson that my team and I learned throughout this project and engineering design process was the importance of failure and the ability to move on and grow from it. After having to almost entirely scrap our original museum design, we felt discouraged that we had spent so much time on it to begin with, yet we were excited to move on with something new that we loved even more. Recalling this project in the future, I will remember what it felt like to fail only to eventually succeed how we dreamed, and I know I will feel incredibly proud and inspired to do so again.

1.25 Recommendations

If I could go back to the beginning of the semester and start everything over again, I would have tried to focus more on the coding aspects, which does not come as naturally to me. While I improved in my coding skills, I wish I could have been more helpful in that aspect during this project. If I had more time with this project, I would have liked to add a scoreboard so that kids could keep coming back to the exhibit and compete against each other. There is not much more I would add to this exhibit though; I believe that any more information or components would make it too overwhelming for children.

As we progressed through our exhibit, we found that we needed to perform slightly more research on the different types of energy so that we could have knowledge about their differences in energy density. This research was unknown to us at the very beginning of this project, so we did not conduct it then. Nevertheless, prior to starting a project that one is aware is very similar to this project, I would recommend doing such research and performing the necessary calculations to convert the energy produced by a uranium marble into that of wind turbines or solar panels.

Lastly, I would recommend performing research on different types of SparkFun motion sensors. We determined almost too late that we needed two different types of motion sensors: the Hall Effect sensor to detect magnets and the distance sensor to detect general motion. While learning to use and program the distance sensor, we were unaware that the sensor cannot detect round objects, as its readings bounce off and around the surface. Therefore, we had to redesign the nuclear exhibit component so that the marble fell on a seesaw that triggered a flat wooden piece to move so that the distance sensor could accurately read. I would definitely recommend investigating some of these parts ahead of time to avoid such problems in future projects.

1.26 Lessons Learned

Contributions

For milestone five, I was most responsible for purchasing the cardstock to cover the boxes, covering the boxes using mod podge, and 3D-printing the black knob for the wind component of our exhibit (Fig. 32)

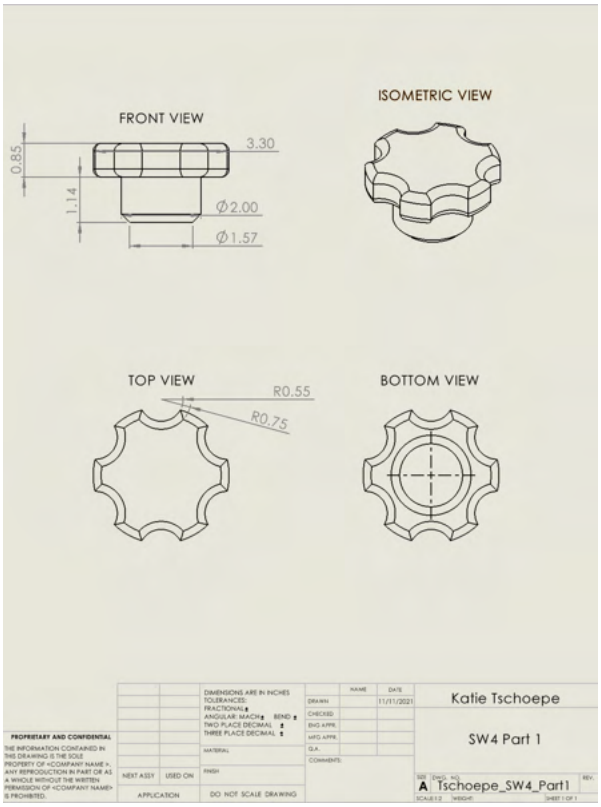

Fig. 32. Wind Component Handle SOLIDWORKS Sketch

Finally, for milestone six, I was responsible for laser cutting the new acrylic (Fig. 29) and wood pieces (Fig. 33), reimagining components of the nuclear exhibit, attaching the acrylic pieces to the trifold, writing some text on the trifold, and pasting images of Tim and Moby throughout our exhibit. While at the museum, I was responsible for taking photos and videos.

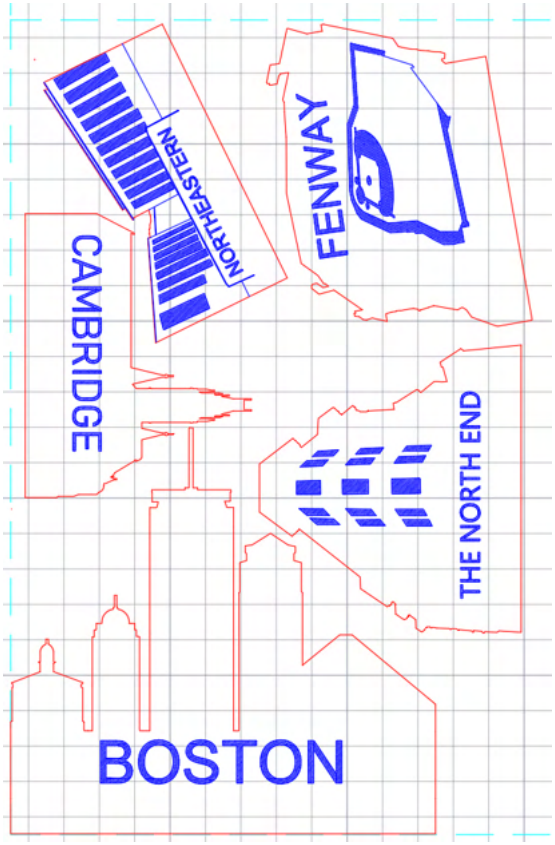

Fig. 29. Acrylic Pieces of Boston Locations

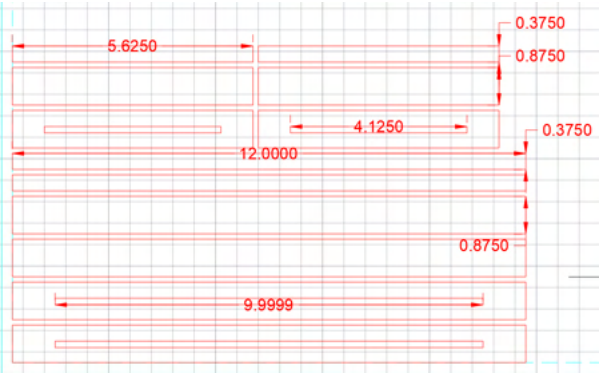

Fig. 33. LED Strip and Acrylic Holder AutoCAD Sketch

Resources

Our group spent less than the $100 provided for our budget, and I purchased acrylic, wood, mod podge, brushes, and paper (Appendix I). Personally, I devoted a total of at least 81.5 hours toward this project. This project helped me understand how much time, effort, and energy goes into creating anything. If I spent that much time on a relatively small project, I now know to some degree what to expect from bigger projects in the future, and I have a greater appreciation and understanding of the management for those projects.

Reflections on Learning

Through this project, I learned the importance of communication while working in a team, patience with individuals who do not think in the same way I do, and resiliency in commitment to my work. While none of these concepts were new to me, as I have had similar experiences with work in dance, this project took those lessons that I learned and applied at dance and put them in an entirely different yet equally important scenario. During this project, I was new to soldering and to using some of the saws and tools in FYELIC, so I had to teach myself or ask my peers for help. After completing this project, I am incredibly proud of the new leadership skills and self-confidence that I have obtained, and I now trust myself, my ideas, and my skills,which will help me in my career moving forward.

Reflections on Working in a Team

This project helped me to improve my communication and leadership while working in a team. My goals for working in my team at the beginning of the semester were to become more vocal with my ideas and opinions and to learn to lead where needed. I achieved the first goal by contributing to a supportive and casual team environment in which I felt more comfortable. In that environment, I was able to share all my ideas, unafraid of my peers' judgment, consequently improving my creativity and confidence. Additionally, I became a stronger leader through this project. As a team manager, I ensured that my team members completed their work to our team standards, organized our work, and presented it properly. I never became overly stubborn, and I never put too much pressure on my fellow teammates, for I did not want them to do so when they were team managers. When I was not a manager, I led by example by doing work that I recognized needed to be done, whether I had signed up for it or not. This project strengthened my communication, management, confidence, and leadership skills, helping me become a better engineer in the process.

Lauren Ward

1.27 Discussion

Our museum exhibit was able to meet all of the physical constraints of this project as well as the objectives we set for ourselves. First off, all of our components fit into the provided bin and when set up, sat on a 36” by 28” table. We also created our exhibit within our budget of $100, using $90.80 of this amount. To see the budget in greater detail, please refer to Appendix I.

In accordance with our problem statement, we created a museum exhibit that was educational and interactive. Both of these ideas were very important to our group as we wanted to educate through game-based learning as we found it to be the most effective way for children to learn. This is shown through a feedback survey that was filled out by users after playing our exhibit. All users were able to interact with the exhibit and the average rating on the user experience was a 9.125 out of 10. Along with this, 87.5% of users voted that the nuclear section of our exhibit was their favorite, which was a crucial component of our design as the user would walk away with a positive experience with nuclear energy and hopefully this will aid in the destigmatization of its use.

Analyzing the qualitative data as well, the users enjoyed the ability to choose which power they would use and they also enjoyed the competitive aspect of trying to beat the clock. With the ability to choose an infinite combination of energy sources, users would continue to play our game again to see how much of Boston they could light up with a specific combination of energy. Also witnessed, was the user wanting to play again to beat their previous energy produced and play against the clock. This brought a competitive spirit to our exhibit and the user would often get others involved so they could work together to power all of Boston. This clearly showed learning from the user as when they would try to improve their score, they would always choose to play the nuclear exhibit as they learned the differences in efficiency. This is also shown in our survey as 87.5% of users answered that nuclear was the most efficient form of energy as compared to wind and solar.

1.28 Conclusion

Our solution to the problem given to us by the Boston Museum of Science was successful as we taught children the topic of sustainability through an inclusive, accessible, transportable, and interactive museum exhibit. Our final design of our museum exhibit included three different sections which each represented a different renewable energy source. The user could produce solar, wind, or nuclear energy through our exhibit and was able to learn how much more efficient nuclear energy is compared to the other two sources. This message was clear to the user as when they would play again, they would focus more on the nuclear exhibit to produce more power. This was great feedback as it showed the user improving their score and learning while they were having fun with our exhibits.This was the proudest moment for me personally as I became accustomed to moving the marbles and testing to see if the motion sensor responded, but when the children saw the LEDs light up for the first time we could see the excitement on their faces. The need to step back from a project and reassess is one of the greatest lessons I have learned through this project. Because our group knew our exhibit so well, there were moments where we had tunnel vision in our design and construction. Some of the most valuable feedback came from our mentor as well as our peers as they could see our exhibit with a pair of fresh eyes and from a perspective we would not have considered. This also allowed us to realize which ideas we needed to get rid of, which we did twice in the earlier milestones. In the future, I will ensure to consistently ask people outside of our group for their opinions. I will also not be afraid to take some time away from a portion of a project to allow myself time to reset and gain a new perspective.

1.29 Recommendations

If I could go back to the beginning of this semester and redo this project, I would want to take the time to build a full cardboard prototype of our final design. It took a couple of milestones to create the final design of our museum exhibit, so we were not able to build a prototype for this design. I think if we had the time to build a full cardboard prototype it would save a lot of confusion down the road and ensure everyone was on the same page and could visualize the final plan for our project. For example, I designed the exteriors of the boxes to fit on 7 sheets of wood that we never ended up using because the dimensions we thought would work were incorrect.

There are also many small fixes I would like to make if we had more time for this project. One of those fixes would be to get slightly more magnetic marbles, but not too magnetic that they would stick together. In our final exhibit, we had it so the user had one very magnetic marble that would continuously loop around, which worked for the exhibit unless the marble got stuck and we had to move the box to get that marble again. I would also want to fix the ramp in the nuclear exhibit so none of the marbles could get stuck. Lastly, I would want to add a rug underneath all three boxes to prevent slipping. All of the sections were weighed down with bags of sand, however, they still moved when the users were playing with the exhibit. This was especially apparent with the wind section where someone in our group usually ended up holding the box while the user would spin the wheel.

One final design element I would have liked to add to our exhibit is a smoother flow as well as a more thought out theme. In our design, we had the monitor tell the user the instructions of the game, but this time was definitely too long and we ended up explaining what to do either way. I would also like to have added a skip button through the instructions for users that already know how to play and want to play again because they would have to wait through all of the instructions again. Lastly, our theme was not very thought out and I think if we had it chosen earlier we could have incorporated it throughout the exhibit and made it more fun for the users playing.

1.30 Lessons Learned

Through this project, I learned that most problems have a simple solution. Most notably, I was struggling for at least a week to create a solution to the issues we were having with our nuclear section of the exhibit. The motion sensor we had could not detect a marble passing through our channel so we needed to create a solution. After many failed attempts, our professor suggested creating a seesaw which was exactly what we needed. We were creating many complex solutions to this problem, but if we had stepped back and looked at it at a basic level, we could have created a solution much easier.

Although I came into this project with experience in AutoCAD, I learned there were so many simple ways to accomplish what I wanted. Previously, I had been limiting myself by only creating sketches with the few functions I was comfortable with, but now I can create more complex designs in less time. Another new skill I possess is an understanding of coding. Throughout high school, I was taught coding multiple times in many different languages and it never stuck. I became very frustrated with coding and assumed it just wasn't for me, however, I now understand how code flows and how functions work which I am especially proud of. The knowledge of both of these topics will benefit me in my career as I am more comfortable and confident in programs that I will most definitely be using in the future.

Reflections on Working in a Team

This project changed my team working skills as we all had to work cohesively and have an understanding of all aspects of the project so it could run smoothly. Previously in group projects, I would split the work up among the group members and we would work independently and reconvene a couple times to check in. However, in this project I was working with my group the majority of the time and worked on my own when I painted or did AutoCAD. I also feel I have an understanding of every aspect of the project even if my time wasn't completely dedicated to it.

I see my biggest asset to my team was my versatility as well as honesty. I have experience in construction, so I was comfortable using power tools as well as the soldering iron. Although I was most comfortable in these areas, I had a good understanding of the hardware and helped out in those areas as well as possible solutions to the issues we were having in the code. I also believe my honesty was a great asset as I wasn't afraid to confront someone if I didn't agree with the direction they were taking the project. I think this helped address possible issues at the source and didn't allow them to pester into later milestones of the project.

Some aspects of teamwork I need to continue to work on is my ability to communicate in between meetings with my group. One challenge we faced was deciding when we would meet with each other to work. Looking back, I don't think it was necessary for every group member to be present for us to meet and work. We did this more towards the end and it worked out much better, but it caused a lot of stress for many of the previous milestones.

I consider my leadership style as very democratic, by allowing everyone's voices to be heard equally and coming

to decisions as a team. However, I am also not afraid to make a concise decision if I find it necessary to be able to move forward. I also think it is important as a leader to understand everyone's strengths and make plans that allow every team member to do something they are confident and comfortable completing. For example, going into this project, I was aware Nick and Zeynep were the more experienced coders of the group and they were made responsible for that portion of the project. I have also learned that it is important as a leader to have a clear plan of action for the week ahead, which became more vital in the final milestones of the project. In future leadership opportunities, I will make sure to be more organized in planning ahead and verify this understanding with everyone throughout the week.

Because of my leadership style, I am also very adaptable to also being managed. I am aware that I am sometimes indecisive and am not afraid to ask my group members to give me a direct answer or direction to work in. Along with this reasoning, if the team is stuck on a certain aspect of the project, I am very willing to sketch and test any possible solution and ensure no stone is left unturned. This was a similar mindset among everyone on the team, so when we faced adversity we were very open with communication to solve an issue. For example, there were some disagreements over the flow of our museum exhibit, specifically whether to allow the user to power any section simultaneously or have a specific order to when each is played. To solve this issue, we drew out a flowchart together of the code and decided as a group that the user would have a set time to play whichever section they would like. Once coming to this decision, we were able to move forward without any grudges and continue with our progress.

Works Cited

[1] A. Liu, Y. Ma, J. M. A. Gunawardena, P. Egodawatta, G. A. Ayoko, and A. Goonetilleke, "Heavy Metals Transport Pathways: The importance of atmospheric pollution contributing to stormwater pollution," Ecotoxicology and Environmental Safety, vol. 164, pp. 696–703, 2018.

[2] American Alliance of Museums, "Standards for Museum Exhibitions and Indicators of Excellence."

[3] "Best practice in making museums more accessible to visually impaired visitors," MuseumNext, 20-Feb-2020. [Online]. Available: https://www.museumnext.com/article/making-museums-accessible-to-visually-impaired-visitors /. [Accessed: 19-Oct-2021].

[4] B. Laurie and J. Powell, "Guide to Exhibit Development," Smithsonian Exhibits, [Online]. Available: exhibits.si.edu

[5] "Certifications," *EDGE Certification*, 20-Oct-2021. [Online]. Available: https://edge-cert.org/certifications/. [Accessed: 08-Dec-2021].

[6] "Designing exhibits to engage girls," Designing Exhibits to Engage Girls | InformalScience.org, 21-May-2019. [Online]. Available: https://www.informalscience.org/news-views/designing-exhibits-engage-girls. [Accessed: 19-Oct-2021].

[7] H. Kwon, R. M. Capraro, and M. M. Capraro, "When I Believe, I Can: Success STEMS from My Perceptions," Canadian Journal of Science, Mathematics and Technology Education, vol. 21, no. 1, pp. 67–85, Feb. 2021.

[8] J. Barcena-Vazquez and K. Caro, "Designing a Video Game to Support Climate Change Awareness in a Museum Exhibition Context," Proceedings of the IX Latin American Conference on Human Computer Interaction, Sep. 2019.

[9] J. Bartolacci, "Accessible museum: Can thoughtful design help improve the experience of viewing art for visitors with disabilities? - architizer journal," Journal, 06-Nov-2017. [Online]. Available:https://architizer.com/blog/inspiration/industry/accessibility-in-museums/. [Accessed:19-Oct-2021].

[10] J. Jacobo, "Irish teen invents method to remove microplastics from ocean, wins $50K Google Science Fair prize," ABC News, 02-Aug-2019. [Online]. Available: https://abcnews.go.com/Technology/irish-teen-invents-method-remove-microplastics-ocean-wins/story?id=64731771. [Accessed: 09-Dec-2021].

[11] J. P. Rowe, E. V. Lobene, B. W. Mott, and J. C. Lester, "Play in the Museum: Design and Development of a Game-Based Learning Exhibit for Informal Science Education," International Journal of Gaming and Computer-Mediated Simulations, vol. 9, no. 3, pp. 96–113, 2017.

[12] K. Flanagan, P. Branchu, L. Boudahmane, E. Caupos, D. Demare, S. Deshayes, P. Dubois, L. Meffray, C. Partibane, M. Saad, and M.-C. Gromaire, "Field performance of two biofiltration systems treating micropollutants from road runoff," Water Research, vol. 145, pp. 562–578, 2018.

[13] L. Andre, T. Durksen, and M. L. Volman, "Museums as avenues of learning for children: A decade of research," Learning Environments Research, 27-Oct-2016. [Online]. Available: https://link.springer.com/article/10.1007/s10984-016-9222-9#Sec16. [Accessed: 19-Oct-2021].

[14]"Layton energy densities - Drexel University." [Online]. Available: https://www.drexel.edu/~/media/Files/greatworks/pdf_sum10/WK8_Layton_EnergyDensities.ashx . [Accessed: 08-Dec-2021].

[15] P. Lalzarliana Paihte, A. C. Lalngaihawma, and G. Saini, "Recycled aggregate filled waste plastic bottles as a replacement of bricks," Materials Today: Proceedings, vol. 15, pp. 663–668, 2019.

[16] National Geographic Society, "Air Pollution," National Geographic Society, 09-Oct-2012. [Online]. Available:

https://www.nationalgeographic.org/encyclopedia/air-pollution/#:~:text=Long%2Dterm%20health%20effects%20from,air%20pollutants%20cause%20birth%20defects. [Accessed: 08-Dec-2021].
[17] "About solar energy," SEIA. [Online]. Available: https://www.seia.org/initiatives/aboutsolar-energy. [Accessed: 07-Dec-2021].
[18] "Best practice in making museums more accessible to visually impaired visitors," MuseumNext, 20-Feb-2020. [Online]. Available: https://www.museumnext.com/article/making-museums-accessible-to-visually-impaired-visitors/. [Accessed: 19-Oct-2021].
[19] "Designing exhibits to engage girls," Designing Exhibits to Engage Girls | InformalScience.org, 21-May-2019. [Online]. Available: https://www.informalscience.org/news-views/designing-exhibits-engage-girls. [Accessed: 19-Oct-2021].
[20] "Nuclear power is the most reliable energy source and it's not even close," Energy.gov. [Online]. Available: https://www.energy.gov/ne/articles/nuclear-power-most-reliable-energy-source-and-its-not-even-close. [Accessed: 07-Dec-2021].
[21] "Universal Design Plan Exhibit Design & Development." [Online]. Available: https://www.mos.org/sites/dev-elvis.mos.org/files/docs/misc/MOS_UD_Plan.pdf. [Accessed: 08-Dec-2021].
[22] "Waste-to-energy," Covanta. [Online]. Available: https://www.covanta.com/what-we-do/waste-to-energy. [Accessed: 19-Oct-2021].
[23] "What is nuclear energy?," Nuclear Energy Institute, 22-Nov-2019. [Online]. Available: https://www.nei.org/fundamentals/what-is-nuclear-energy. [Accessed: 07-Dec-2021].
[24]"What is sustainability?," UCLA Sustainability. [Online]. Available: https://www.sustain.ucla.edu/what-is-sustainability/. [Accessed: 06-Dec-2021].
[25] "What is Universal Design," Centre for Excellence in Universal Design, 2020. [Online]. Available: https://universaldesign.ie/what-is-universal-design/. [Accessed: 08-Dec-2021].
[26]"What is wind power?," WINDExchange. [Online]. Available: https://windexchange.energy.gov/what-is-wind. [Accessed: 07-Dec-2021].
[27] Zhang, H., Zhang, L., Han, X., Kuang, L; Hua, D. (2018). Guanidine and Amidoxime Cofunctionalized Polypropylene Nonwoven Fabric for Potential Uranium Seawater Extraction with Antifouling Property. Industrial and Engineering Chemistry Research

AUTHOR BIOGRAPHIES

Zeynep B. Ay was born in Pasadena, California in 2003. She was born to Turkish and

Greek immigrant parents who came to the U.S. in 1998. She received her highschool diploma in 2020 from Pullman Highschool, and she is currently a candidate for a B.S. degree in Chemical engineering from Northeastern University, Boston, MA in 2025.

Throughout High School, Zeynep participated in many clubs that catered to passions. She was a forward striker on the Varsity Girls Soccer team of her High School, participated with research that had to do with Electrochemical Biofilms at Washington State University under Professor Haluk Beyenal, took many running start courses from Washington State University, was President & Founder of Knitting Club, and was the Vice President of the Computer Science Team.

Ms. Ay is currently a member of the Society of Women's Engineers branch for Northeastern University (SWE) and is a member of Northeastern Universities Sustainable Buildings Club (NUSBO). She hopes to pursue research in the sustainable energy industry.

Nicholas P. Gorycki was born in Bryn Mawr, PA in 2003. He received his high school diploma from La Salle College High School in 2021. He is currently a candidate for a B.S. degree in Electrical Engineering and Physics from Northeastern University in Boston, MA in 2025.

Throughout his highschool career, he found an interest in engineering through his AP Physics C course. In addition to his course work, he began working on automobiles in his free time and he involved himself with the IT department at his highschool. In order to provide the same guidance that he received throughout school, he founded a tutoring company, TeensTutor. Through these activities, he was driven to pursue engineering in a professional manner. He graduated from LSCHS with Distinguished Honors.

Mr. Gorycki is a member of Northeastern's American Society of Mechanical Engineers (ASME) along with the electric racing club. He is also involved with the Archery club and the TaeKwonDo club.

Kathleen A. Tschoepe was born in Plano, TX, in 2003. She received her high school diploma from Ursuline Academy of Dallas in 2021, and she is currently a candidate for a B.S. degree in bioengineering from Northeastern University, Boston, MA in 2025.

In 2020, she worked as a Prosthetic Fabrication intern at Ameristep Prosthetics in Dallas, TX, which sparked her interest in bioengineering. Since that work, she served as the President of Science National Honors Society from 2020-2021, and she has received multiple awards recognizing her accomplishments in calculus, chemistry, biology, and anatomy. She was also a recipient of the National Merit Scholar award in 2021.

Ms. Tschoepe is a member of the Northeastern University Society of Women Engineers, Northeastern University Dance Company, Harvard University Tap Company, and Northeastern University Innovators for Global Health. As a member of the design team for IGH, Ms. Tschoepe fabricated copper ECG electrodes to be used by St. Paul's Hospital in Ethiopia. She plans to conduct research in the fabrication and improved efficiency of medical devices during her time as an undergraduate at Northeastern University.

Lauren L. Ward was born in Edison, NJ, in 2003. She received her high school diploma from Trinity Hall in 2021, and she is currently a candidate for a B.S. degree in mechanical engineering and design from Northeastern University, Boston, MA in 2025.

Throughout her high school career, she completed four year of engineering courses at the honors level. With this dedication to her academic success, she was rewarded as a Cum Laude scholar in her senior year. These STEM classes along with her work in the set design and construction of her school's production company inspired her to pursue a major in mechanical engineering and design.

Ms. Ward is a member of the Northeastern Society of Women Engineers, the Northeastern student chapter of the American Society of Mechanical Engineers (ASME), and the Northeastern Botanical Society. In the future, she hopes to work in the entertainment field in the design and construction of concert sets and musical stages.

APPENDICES

○ APPENDIX A – TEAM CONTRACT

Zeynep Ay, Nick Gorycki, Katie Tschoepe, Lauren Ward
Professor Schulte Grahame
Engineering Cornerstone
15 September 2021

Katie Tschoepe	Nick Gorycki	Lauren Ward	Zeynep Ay
katiet5703@gmail.com	npg701@gmail.com	wardlauren492@gmail.com	zeynepay7@gmail.com
214-901-2533	610-392-9848	908-692-2582	208-596-9863

Respect

What is your definition of work lateness and policy for organized submission?
We define work lateness as not sending your fully complete work to the group leader by the decided deadline. For organized submission we will make sure our work is completed 2-3 days before the deadline, so the person responsible for organizing all of our work is not rushed for time. We will also meet once in those 2-3 days to make sure the presenter understands everyone's work.
What is your definition of meeting punctuality and procedure for a successful meeting?
We define meeting punctuality as being on-time for meetings, with a 10 minute grace period excluding class conflicts that are already known. Our procedure for a successful meeting will be to make goals beforehand that we want to complete in the meeting.
What will be the procedure if someone violates these expectations?
The individual who violates the grace period 2 times is expected to compensate by giving each other member with a coffee of their choice.

Commitment

What hours do you expect people to be available to meet? Answer questions?
We expect each other to be available to meet Monday through Thursday from 10am-9pm when they are not in classes or have previously mentioned conflicts. We also intend to work some Friday mornings as needed. If necessary, we will decide on weekend availability.
What will your expectations for quality be? / How will you measure this value?
Each individual should do their assigned task/work to presentation standards, meaning that they should not be embarrassed to show it to other team members.
What will be the procedure if someone violates these policies?
The individual who violates these policies must redo their task before the next meeting.

Transparency

How will your team make decisions? / What will be the consensus?
We will make decisions with a unanimous decision.
How will you ensure all information is shared and open to all?

We will all post our work to the shared google drive, so all team members will be able to view the group's information without trouble.

What will be the procedure if someone feels excluded?

The individual who feels excluded will bring up the issue to the group, and the group will decide on a solution to make the individual feel more included.

Communication

Identify the method by which you will primarily communicate with each other.

We will utilize an iMessage group chat.

How will you ensure everyone's voice is heard?

We will allow everyone the chance to voice their opinions without judgment. When it appears a discussion has ended, we will ask if anyone has any other input before moving onto the next topic.

What will you do when there is a disagreement?

As a group we will hear both sides of the disagreement and figure out a way to compromise for a solution.

How will you periodically reflect on strengths and issues as a group? (provide a plan)

We will have weekly meetings on Wednesdays in the range of 10:30am-2:00pm.

Justice

How will you define equitable contribution?

Everyone completing the work that was assigned to them from the team and does this work up to the standard we have set. Everyone should have nearly an equal amount of work.

How will your group work to prevent conflict?

Everyone is honest with each other and pitches in their ideas. If a conflict arises due to one team member, one other team member will confront them in order to make it feel like less of an intervention.

What will be the procedure if someone stops contributing?

The first and second time someone stops contributing, we (as a group) will give them a warning, and the third time we will alert the professor

Team Goals

1. Complete every assignment early, to the very best of our capabilities.
2. Use our time efficiently in group meetings.
3. Learn how to collaborate with others effectively in order to be better team members in future scenarios.
4. Learn how to use engineering principles creatively and (hopefully) successfully.

Personal Goals

Katie Tschoepe	Zeynep Ay	Lauren Ward	Nick Gorycki
Become more vocal with my ideas and opinions.	Be on-time to the meetings and also for the assignments	Do not procrastinate my work for the last minute.	Be more open to peers' ideas and mix them with my own
Learn to lead when and where needed.	Keep the team organized/keep the assignments organized.	Be sure to contribute my ideas to group discussions.	Hold myself and others accountable

Team Roles

P1-M1	P1-M2	P1-M3	P1-M4
Katie Tschoepe	Nick Gorycki	Lauren Ward	Zeynep Ay

Team Calendar

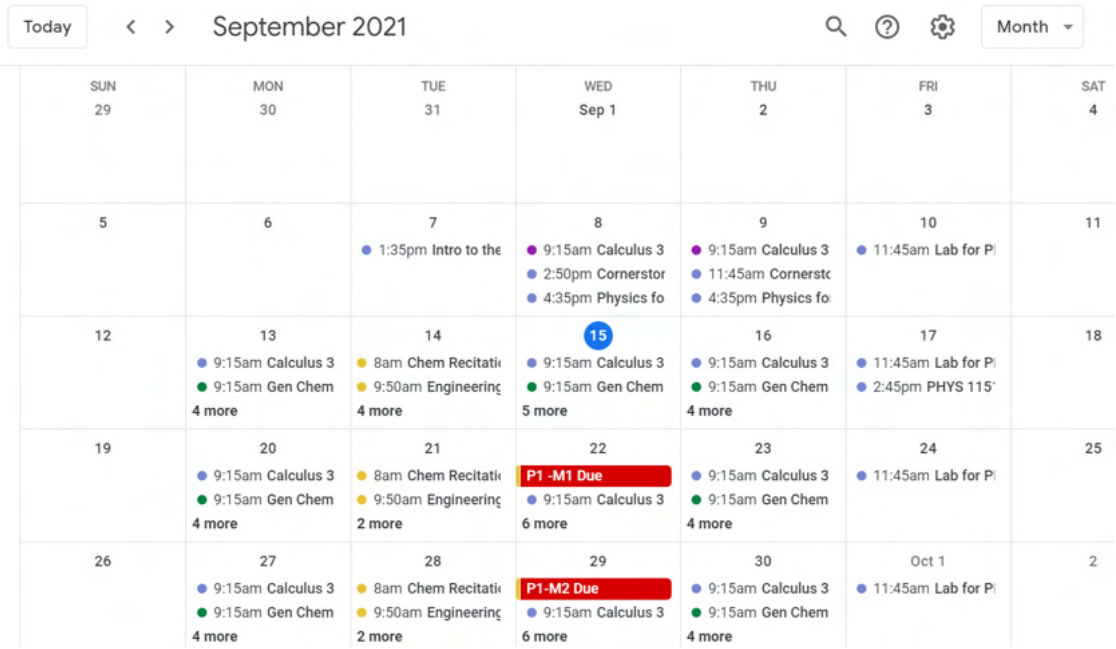

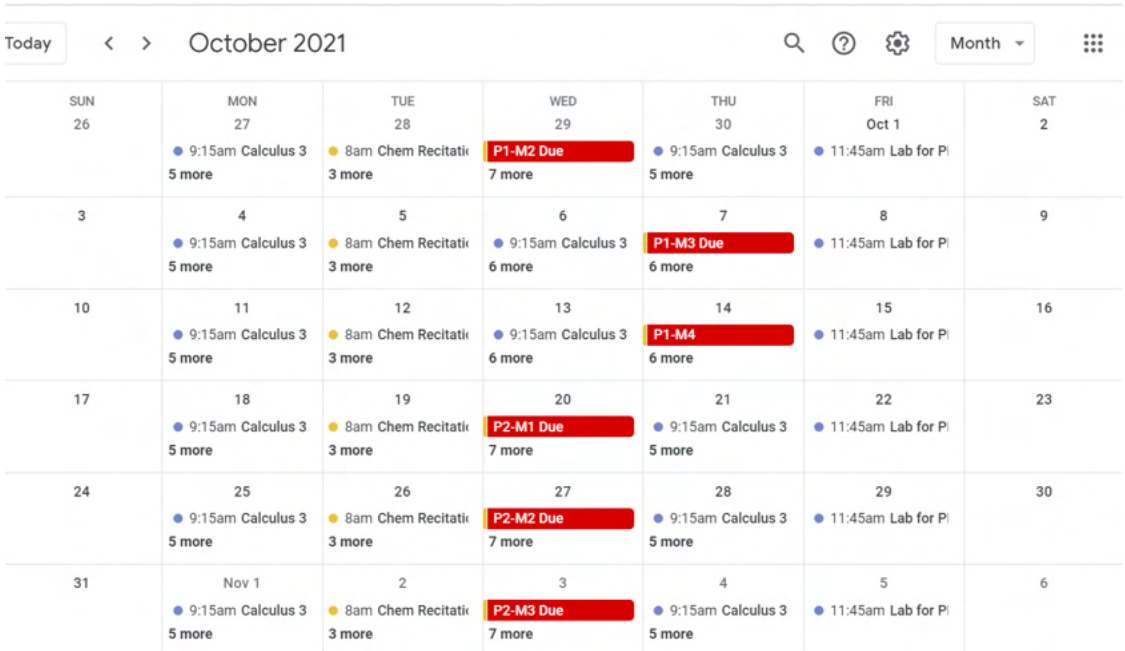

Today November 2021 Month

SUN	MON	TUE	WED	THU	FRI	SAT
31	Nov 1 9:15am Calculus 3 9:15am Gen Chem 4 more	2 8am Chem Recitati 9:50am Engineering 2 more	3 P2-M3 Due 9:15am Calculus 3 6 more	4 9:15am Calculus 3 9:15am Gen Chem 4 more	5 11:45am Lab for P	6
7	8 9:15am Calculus 3 9:15am Gen Chem 4 more	9 8am Chem Recitati 9:50am Engineering 2 more	10 P2-M4 Due 9:15am Calculus 3 6 more	11 9:15am Calculus 3 9:15am Gen Chem 4 more	12 11:45am Lab for P	13
14	15 9:15am Calculus 3 9:15am Gen Chem 4 more	16 8am Chem Recitati 9:50am Engineering 2 more	17 P2-M5 9:15am Calculus 3 6 more	18 9:15am Calculus 3 9:15am Gen Chem 4 more	19 11:45am Lab for P	20
21	22 9:15am Calculus 3 9:15am Gen Chem 4 more	23 8am Chem Recitati 9:50am Engineering 2 more	24 9:15am Calculus 3 9:15am Gen Chem 5 more	25 9:15am Calculus 3 9:15am Gen Chem 4 more	26 11:45am Lab for P	27
28	29 P2-M6a and b: Gallery Walk, and Report Draft P 9:15am Calculus 3 5 more	30 8am Chem Recitati 3 more	Dec 1 9:15am Calculus 3 9:15am Gen Chem 5 more	2 9:15am Calculus 3 9:15am Gen Chem 4 more	3 P2-M7: Present Proje 11:45am Lab for P	4 Project Presentation i

Today December 2021 Month

SUN	MON	TUE	WED	THU	FRI	SAT
28	29 P2-M6a and b: Gallery Walk, and Report Draft P 9:15am Calculus 3 5 more	30 8am Chem Recitati 3 more	Dec 1 9:15am Calculus 3 9:15am Gen Chem 5 more	2 9:15am Calculus 3 9:15am Gen Chem 4 more	3 P2-M7: Present Proje 11:45am Lab for P	4 Project Presentation i
5	6 9:15am Calculus 3 9:15am Gen Chem 4 more	7 8am Chem Recitati 9:50am Engineering 2 more	8 9:15am Calculus 3 9:15am Gen Chem 5 more	9 9:15am Calculus 3 9:15am Gen Chem 4 more	10 P2-M8: Paper Due 11:45am Lab for P	11
12	13 9:15am Calculus 3 9:15am Gen Chem 4 more	14 8am Chem Recitati 9:50am Engineering 2 more	15 9:15am Calculus 3 9:15am Gen Chem 5 more	16 9:15am Calculus 3 9:15am Gen Chem 4 more	17 11:45am Lab for P	18
19	20 9:15am Calculus 3 9:15am Gen Chem 4 more	21 8am Chem Recitati 9:50am Engineering 2 more	22 9:15am Calculus 3 9:15am Gen Chem 5 more	23 9:15am Calculus 3 9:15am Gen Chem 4 more	24 11:45am Lab for P	25
26	27 9:15am Calculus 3 9:15am Gen Chem 4 more	28 8am Chem Recitati 9:50am Engineering 2 more	29 9:15am Calculus 3 9:15am Gen Chem 5 more	30 9:15am Calculus 3 9:15am Gen Chem 4 more	31 11:45am Lab for P	Jan 1

Signatures

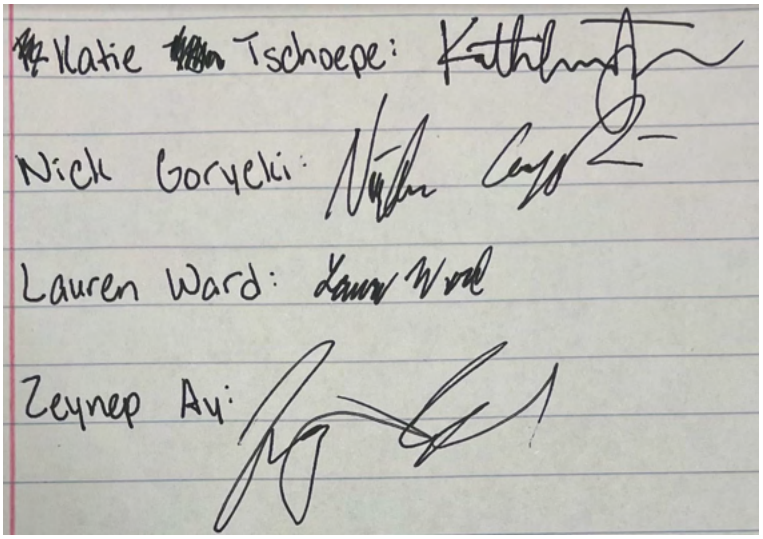

-

-

- **Appendix B - Decision Analysis**

Musts		Nuclear Sea-water		Micro-plastics		Regional Climate Change		Storm-water	
Transportable		Yes		Yes		Yes		No-Go	
Accessible		Yes		Yes		Yes		Yes	
Gender-Inclusive		Yes		Yes		Yes		Yes	
Game-Based		Yes		Yes		No-Go		Yes	
Wants	**Weight**	**Score**	**Weight x Score**	**Score**	**Weight x Score**	**Score**	**Weight x Score**	**Score**	**Weight x Score**
Educational	10	10	100	10	100	N/A	N/A	N/A	N/A
Comprehensible	10	8	80	9	90	N/A	N/A	N/A	N/A
Interactiveness	9	10	90	8	72	N/A	N/A	N/A	N/A
Easily reset	5	6	30	3	15	N/A	N/A	N/A	N/A
Kid-proof	8	10	80	3	24	N/A	N/A	N/A	N/A
Applicability	7	8	56	8	56	N/A	N/A	N/A	N/A
Minimalism	6	8	48	8	48	N/A	N/A	N/A	N/A
Multi Sensory	6	8	48	5	30	N/A	N/A	N/A	N/A
		Total Score:	532	**Total Score:**	435	**Total Score:**	N/A	**Total Score:**	N/A

Final Decision: Nuclear Sea-water idea resulted in the highest score, thus will be the idea we primarily explore in the following weeks.

Our decision matrix (picture above) displays our work completed in Milestone 2 of this project. The musts we defined for our exhibit as a group were that it had to be Transportable, Accessible, Gender-Inclusive, and Game-Based. These standards resulted in the regional climate change and stormwater exhibits being eliminated. From there, we evaluated the remaining two exhibits with reference to the weighted wants. These stated that we wanted the exhibit to be educational, comprehensible, interactive, easily reset, kid-proof, applicable, minimalistic, and multi sensory.

- **Appendix C - Final AutoCAD/Solidworks Drawings**

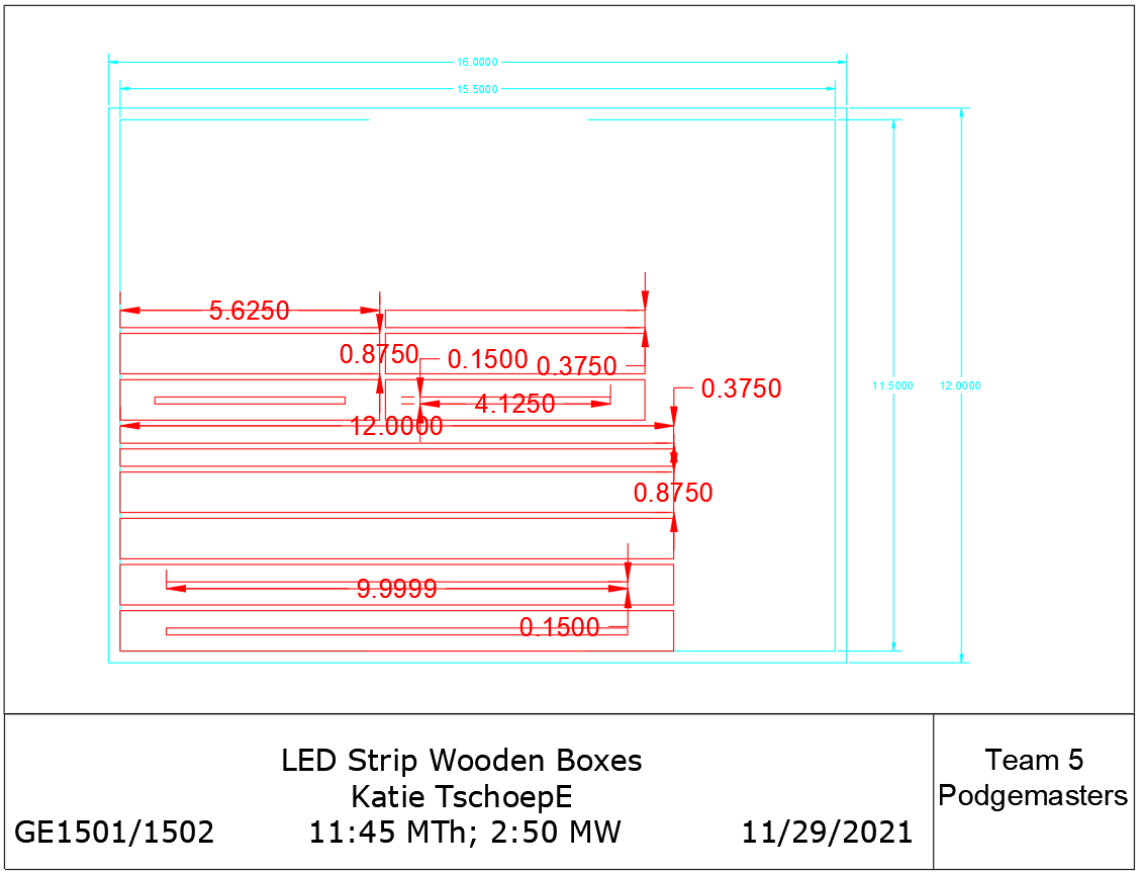

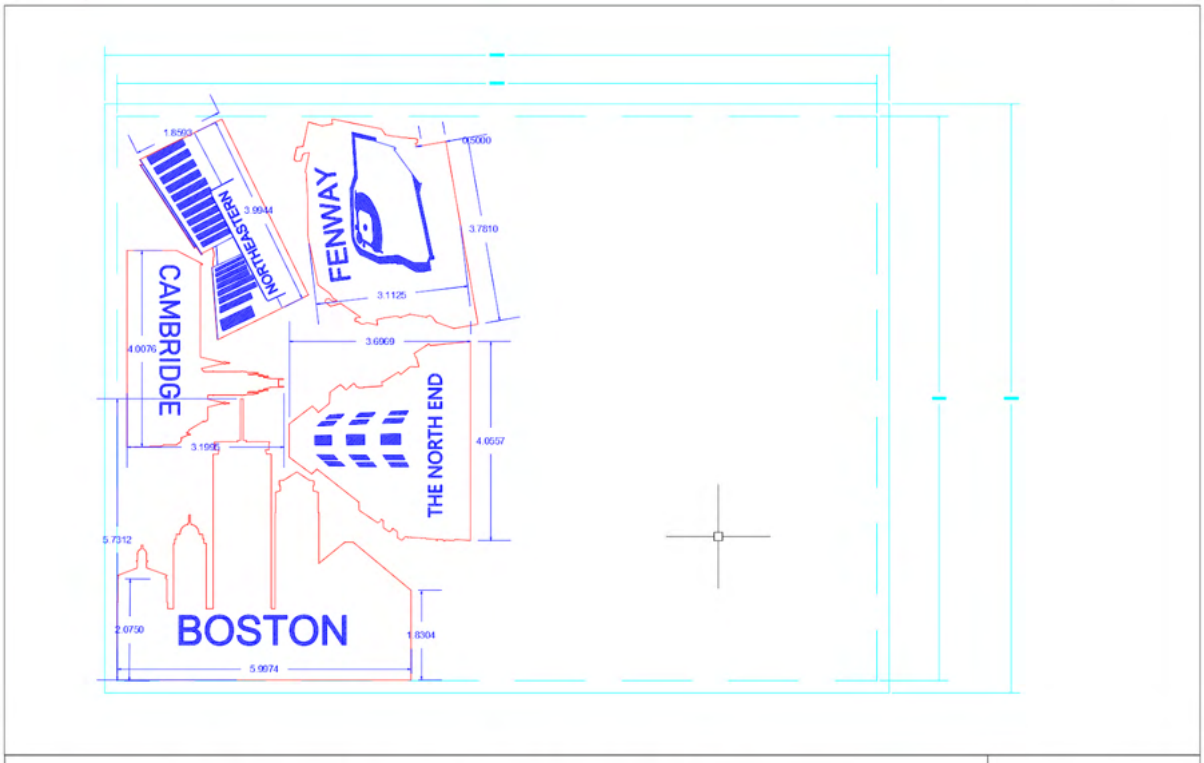

Clear Acrylic Boston Location Pieces Katie Tschoepe GE1501/1502 11:45 MTh; 2:50 MW 11/23/2021	Team 5 Podgemasters

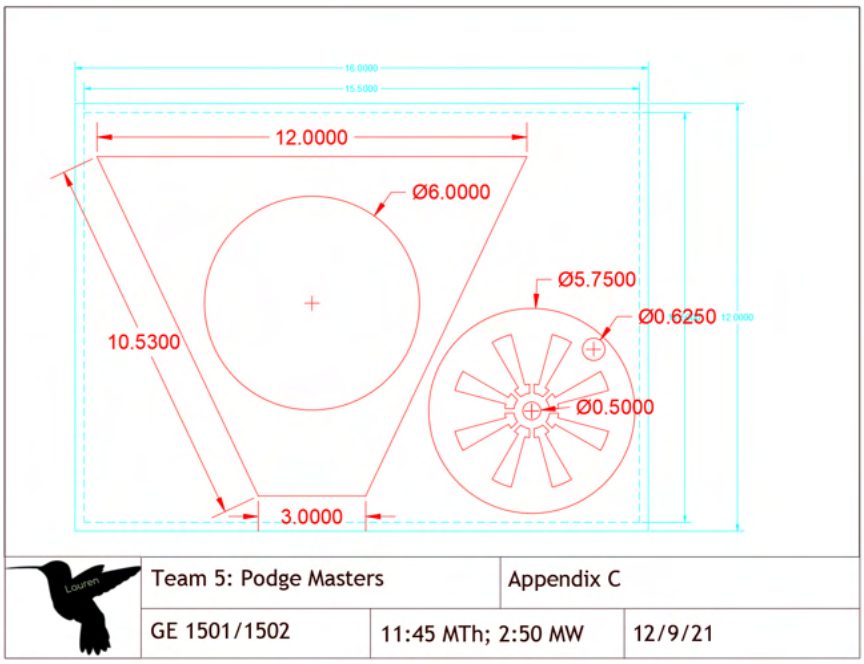
16.0000
15.5000
12.0000
Ø6.0000
Ø5.7500
Ø0.6250
12.0000
10.5300
Ø0.5000
3.0000
Lauren
Team 5: Podge Masters
Appendix C
GE 1501/1502
11:45 MTh; 2:50 MW
12/9/21

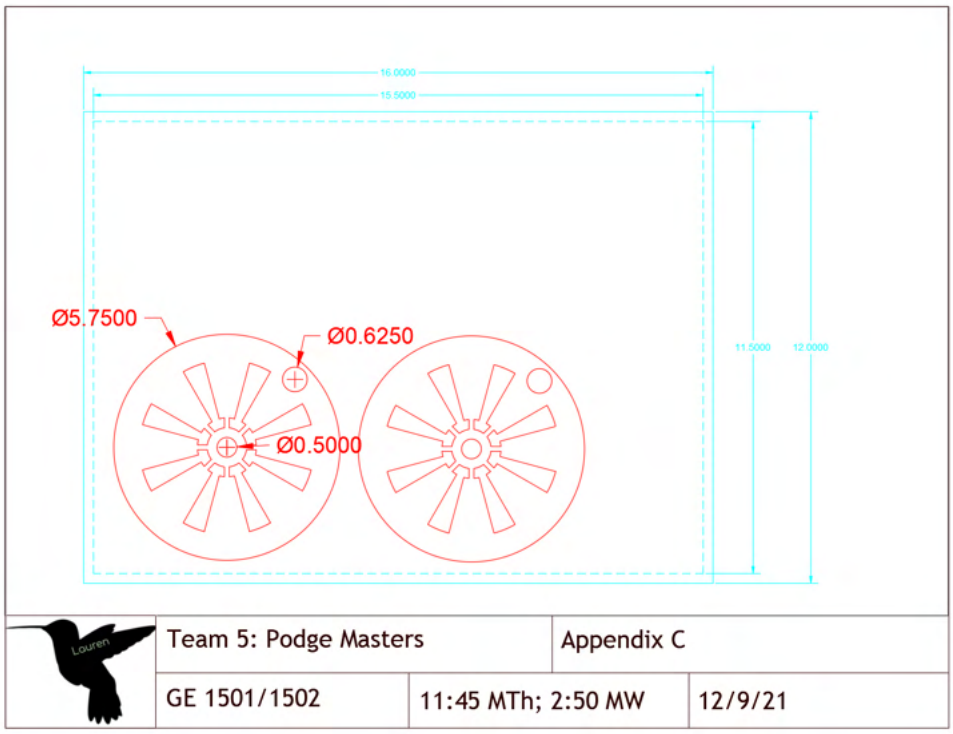
16.0000
15.5000
Ø5.7500
Ø0.6250
Ø0.5000
11.5000
12.0000
Team 5: Podge Masters
Appendix C
GE 1501/1502
11:45 MTh; 2:50 MW
12/9/21

○

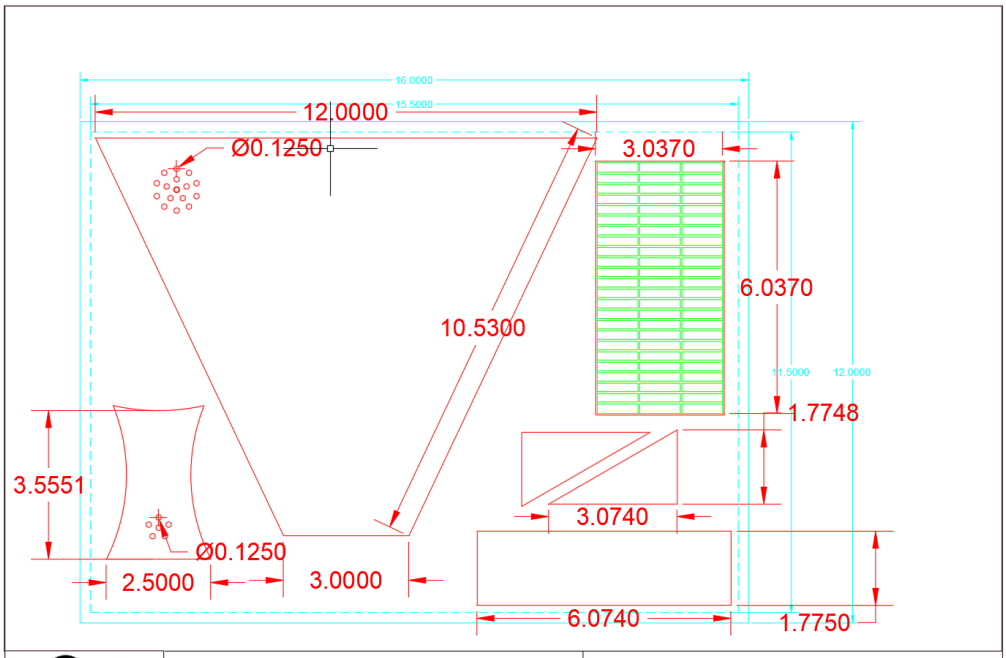

Team 5: Podge Masters		Appendix C
GE 1501/1502	11:45 MTh; 2:50 MW	12/9/21

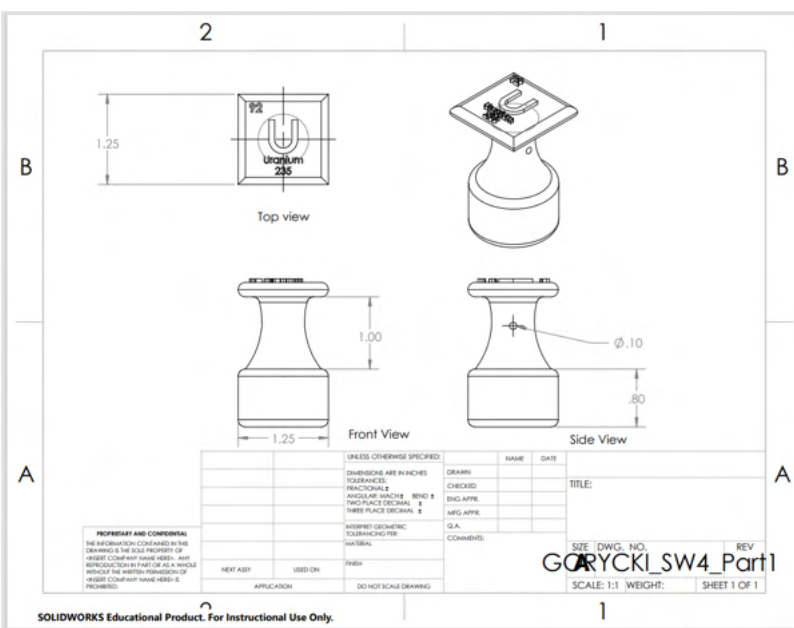

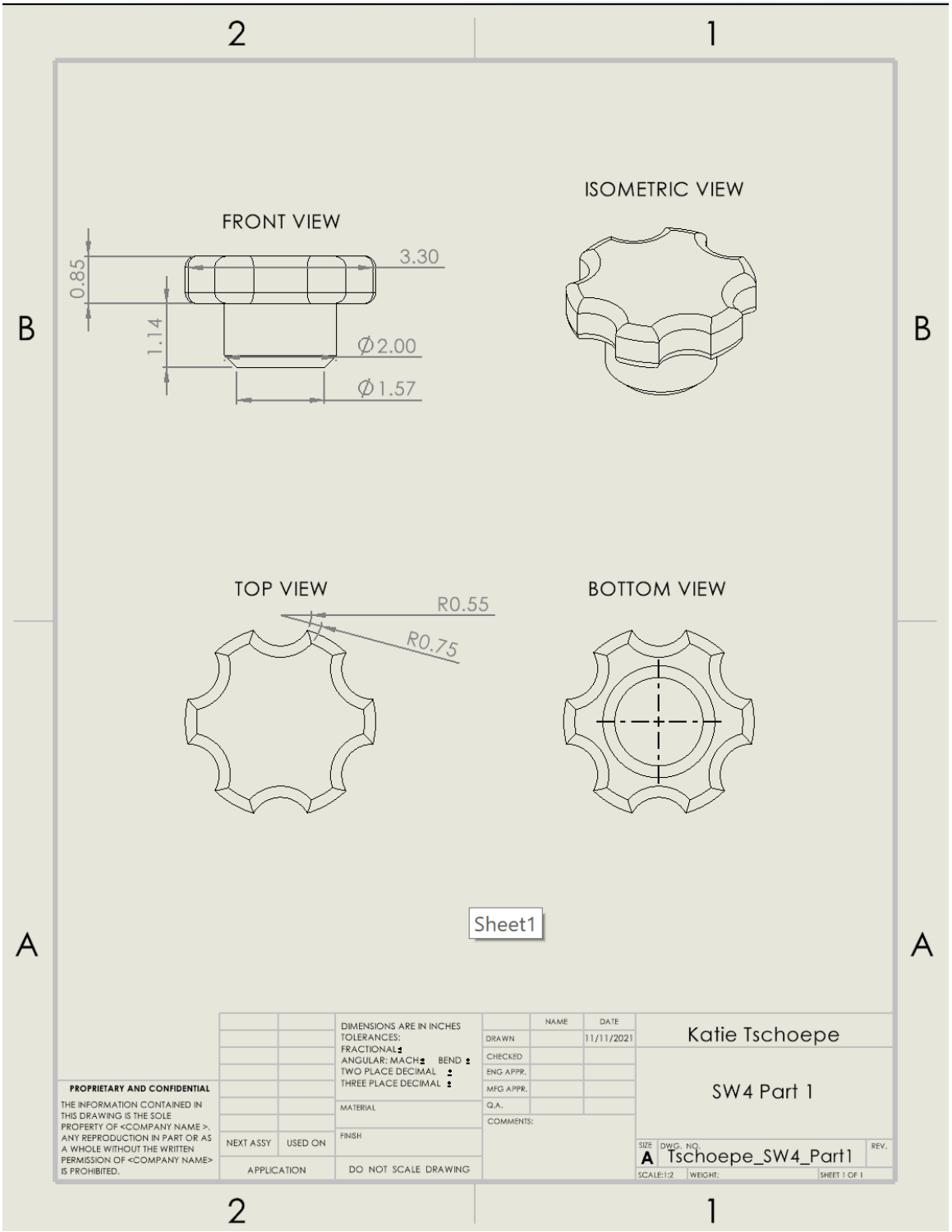
FRONT VIEW
3.30
0.85
1.14
Ø2.00
Ø1.57
ISOMETRIC VIEW
TOP VIEW
R0.55
R0.75
BOTTOM VIEW
Sheet1
PROPRIETARY AND CONFIDENTIAL
THE INFORMATION CONTAINED IN THIS DRAWING IS THE SOLE PROPERTY OF <COMPANY NAME >. ANY REPRODUCTION IN PART OR AS A WHOLE WITHOUT THE WRITTEN PERMISSION OF <COMPANY NAME> IS PROHIBITED.
NEXT ASSY
USED ON
APPLICATION
DIMENSIONS ARE IN INCHES
TOLERANCES:
FRACTIONAL ±
ANGULAR: MACH ± BEND ±
TWO PLACE DECIMAL ±
THREE PLACE DECIMAL ±
MATERIAL
FINISH
DO NOT SCALE DRAWING
NAME
DATE
DRAWN
11/11/2021
CHECKED
ENG APPR.
MFG APPR.
Q.A.
COMMENTS:
Katie Tschoepe
SW4 Part 1
SIZE
A
DWG. NO.
Tschoepe_SW4_Part1
REV.
SCALE:1:2
WEIGHT:
SHEET 1 OF 1

○ Appendix D – Product Testing Results

Were you able to engage with all sections of the exhibit?	Rate your experience with this exhibit (1-10).	What was your favorite exhibit component?	Rank the types of energy sources by efficiency [Nuclear].	Rank the types of energy sources by efficiency [Solar].	Rank the types of energy sources by efficiency [Wind].	Do you have any feedback regarding our exhibit?	Our Response on Presentation Day 2
Yes	10	Nuclear	Largest	In the middle	In the middle	Make the wheel look more like a wind turbine	N/A
Yes	8	Nuclear	Largest	Smallest	In the middle	Include more specific instructions about the goal and rules of the game	Altered the GUI to display step by step directions
Yes	10	Nuclear	Largest	Smallest	In the middle		
Yes	9	Nuclear	Largest	Smallest	In the middle		
Yes	9	Nuclear	Largest	Smallest	In the middle		
Yes	10	Solar	Largest	Smallest	In the middle	Nothing, I really liked all of it!	
Yes	8	Wind	Largest	In the middle	Smallest		
Yes	10	Nuclear	In the middle	Largest	In the middle		
Yes	6	Nuclear	Largest	In the middle	Largest		
Yes	8	Wind	Largest	In the middle	Smallest		
Yes	10	Nuclear	Largest	Smallest	In the middle	Show the person how hard nuclear is to produce despite being the most efficient	N/A
Yes	10	Nuclear	Smallest	In the middle	Largest		
Yes	9	Nuclear	Largest	Smallest	In the middle		
Yes	7	Nuclear	Largest	Smallest	In the middle	More time	We believed that our time limit was long enough
Yes	8	Nuclear	Largest	In the middle	Smallest	Put something grippy under the wind section to hold it in place	Added duct tape to bottom of box
Yes	8	Wind	Largest	Smallest	In the middle	The magnet response on the nuclear is sometimes "iffy" and I'm not sure when the game ends	Added sound effects and large "Time's Up!" screen
Yes	10	Nuclear	Largest	Smallest	In the middle	Nothing, awesome exhibit!!!	
Yes	8	Wind	Largest	Smallest	In the middle	Have a sound effect when you start/end (was unclear)	Added sound effects throughout game
Yes	10	Nuclear	Largest	In the middle	Smallest		
Yes	10	Nuclear	Largest	In the middle	Smallest		
Yes	10	Wind	Largest	Smallest	In the middle		
Yes	9	Nuclear	Largest	Smallest	In the middle	Decorate the nuclear exhibit more	N/A
Yes	10	Wind	Smallest	In the middle	Largest		
Yes	10	Nuclear	Largest	Smallest	In the middle		
Yes	10	Nuclear	Largest	In the middle	Smallest		
Yes	9	Nuclear	Largest	In the middle	Smallest		
Yes	10	Wind	In the middle	In the middle	Largest		
Yes	10	Nuclear	Largest	Smallest	In the middle		
Yes	10	Nuclear	Largest	In the middle	Smallest		
Yes	10	Nuclear	Largest	Smallest	In the middle		
Yes	9	Nuclear	Largest	Smallest	In the middle		
Yes	7	Wind	Largest	Smallest	In the middle		
Level of Engagement: 100%	**Average Rating: 9.125**	**Overall Favorite: Nuclear (72%)**	**Correct: 87.5%**	**Correct: 56.25%**	**Correct: 62.5%**		

○ APPENDIX E – CODE USED IN PROJECT

This code was written and utilized in MatLab App Designer along with a Graphic User interface

```
classdef app_museum_exhibit < matlab.apps.AppBase

    % Properties that correspond to app components
    properties (Access = public)
        UIFigure                    matlab.ui.Figure
        TimesupLabel                matlab.ui.control.Label
        windmessage                 matlab.ui.control.Label
        nucmessage                  matlab.ui.control.Label
        solarmessage                matlab.ui.control.Label
        endmessage                  matlab.ui.control.Label
        centermessage               matlab.ui.control.Label
        ofyourenergycamefromsolarEditField  matlab.ui.control.NumericEditField
        ofyourenergycamefromsolarEditFieldLabel  matlab.ui.control.Label
        ofyourenergycamefromwindEditField  matlab.ui.control.NumericEditField
        ofyourenergycamefromwindEditFieldLabel  matlab.ui.control.Label
        ofyourenergycamefromnuclearEditField  matlab.ui.control.NumericEditField
        ofyourenergycamefromnuclearEditFieldLabel  matlab.ui.control.Label
        SolarEnergyCapturedGauge        matlab.ui.control.LinearGauge
        SolarEnergyCapturedGaugeLabel   matlab.ui.control.Label
        WindEnergyCapturedGauge         matlab.ui.control.LinearGauge
        WindEnergyCapturedGaugeLabel    matlab.ui.control.Label
        UraniumPiecesCollectedGauge     matlab.ui.control.LinearGauge
        UraniumPiecesCollectedGaugeLabel  matlab.ui.control.Label
        GreatJobLabel                   matlab.ui.control.Label
        goodjobmoby                     matlab.ui.control.Image
        greatjobtextbubble              matlab.ui.control.Image
        TotalenergyinGWhEditField       matlab.ui.control.NumericEditField
        TotalenergyinGWhEditFieldLabel  matlab.ui.control.Label
        annie                           matlab.ui.control.Image
        timnmoby                        matlab.ui.control.Image
        startmoby                       matlab.ui.control.Image
        all3characters                  matlab.ui.control.Image
        TimerGauge                      matlab.ui.control.Gauge
        TimerGaugeLabel                 matlab.ui.control.Label
        StartButton                     matlab.ui.control.Button
        PresstheButtontoStartLabel      matlab.ui.control.Label
        background                      matlab.ui.control.Image
    end


    methods (Access = private)

    end
```

```
% Callbacks that handle component events
methods (Access = private)

    % Button pushed function: StartButton
    function StartButtonPushed(app, event)
    app.StartButton.Visible =0; %Everything from here on out occurs after the startbutton is pushed
    app.all3characters.Visible = 0; %These visibily sections make sure the end screen is closed as the program restarts
    app.startmoby.Visible = 0;
    app.PresstheButtontoStartLabel.Visible = 0;
  app.centermessage.Text = 'You have 1 minute to make as much power as possible. Can you power all of Boston?';
  app.centermessage.Visible = 1;% this displays a number of messages to the user as the game initializes
  pause(5);
  app.centermessage.Text = 'The buildings on the board will light up as you make energy!';
  pause(5);
  app.centermessage.Visible = 0;
  app.windmessage.Visible = 1;
  pause(5);
  app.windmessage.Visible = 0;
  app.nucmessage.Visible = 1;
  pause(5);
  app.nucmessage.Visible = 0;
  app.solarmessage.Visible = 1;
  pause(5);
  app.solarmessage.Visible = 0;
  app.centermessage.Text = 'Ready?';
  app.centermessage.Visible = 1;
  pause(3);
      app.centermessage.Text = '3';
                a = arduino('COM5','Uno',"Libraries","Ultrasonic"); % initializes the redboard
          app.centermessage.Text = '2';
          pause(1);

          %% Connect to board



          %% Define variables for pins
          led_pin = 'D6';        %% The sun pin
          nucLed = 'D4';        %% The smokestack pin
          button_pin = 'D7';        %% The push buttons pin int hall_pin = 0;

          led1 = 'D8';
          led2 ='D9';
          led3 ='D10';
          led4 ='D11';
          led5 ='D12';

          motion_echo_pin = 2;    %% See the diagram on theis website for the difference between echo and trig:
          motion_trig_pin = 3;    %% https://create.arduino.cc/projecthub/abdularbi17/ultrasonic-sensor-hc-sr04-with-arduino-tutorial-327ff6
```

```
        hall_pin = 'A0';          %% The Hall effect sensor pin

        counter_marbles = 0;  %% Counts the number of marbles the child has              (Nuclear Energy part of the exhibit)
        counter_spins = 0;    %% Counts the number of spins the child has completed        (Wind Energy part of the exhibit)
        counter_sec = 0;      %% Counts the number of seconds the child pushed the button  (Solar Energy part of the exhibit)
        app.centermessage.Text = '1';
        pause(1);

        solarcounter = 1;
        solartimer=0;
        solarseconds = 0;

        lastDistance = 6;
        lastResult = 0;
        nucLightCount = 0;

        %audiofilesetup
        [y fs]=audioread('Mobybeep.mp3');%sets up the file for the moby beeping sound effect
        playerbeep = audioplayer(y,fs);




        ultrasonicObj = ultrasonic(a,'D2','D3'); % sets up distance sensor
        energy = 0;
        app.centermessage.Text = ' ';
        app.UraniumPiecesCollectedGauge.Visible = 1; % all of these visibilities show the meters for energy produced that the user sees.
    app.WindEnergyCapturedGauge.Visible = 1;
    app.SolarEnergyCapturedGauge.Visible = 1;
    app.UraniumPiecesCollectedGaugeLabel.Visible = 1;
    app.WindEnergyCapturedGaugeLabel.Visible = 1;
    app.SolarEnergyCapturedGaugeLabel.Visible = 1;
    app.annie.Visible = 1;
    app.TimerGauge.Visible = 1;
    app.TimerGaugeLabel.Visible = 1;
    app.timnmoby.Visible = 1;
    app.TotalenergyinGWhEditField.Visible =1;
    app.TotalenergyinGWhEditFieldLabel.Visible =1;
        pause(.75);
        app.centermessage.Text = ' ';


for time = (1:300) %runs through the loop 300 times for 1/5 of a second each

            % Nuclear Exhibit
            distance = readDistance(ultrasonicObj); % reads the distance sensor
            distance = distance * 100; % convers to cm as it is read in m
```

```
% Checking if a marble has been dropped
    if(distance < 6.3 && lastDistance > 6.3)   %%If there is an object ~6.35 cm(2 inches) or closer and the last distance was greater than said
distance
  counter_marbles = counter_marbles + 1; %adds a value to how many marbles the user has collected
  writeDigitalPin(a,nucLed,true); % turns the nuclear led on
  nucLightCount=6; % sets a timer within the loop to keep the nuclear light on for 1.2 seconds
end
nucLightCount = nucLightCount - 1; %timer system for smokestack lights
if nucLightCount>0 % the count goes down every loop, so after 6 loops the light turns off again
writeDigitalPin(a,nucLed,true);
end
if nucLightCount<0
writeDigitalPin(a,nucLed,false);
end

     lastDistance = readDistance(ultrasonicObj); % reads the value in again for distance, but this is used the next time the loop runs to decide
whether the lever has been triggered again or the code is reading the same marble
lastDistance= lastDistance * 100;



%% Wind Exhibit
result_wind = readDigitalPin(a, 'A0');
if result_wind == 0 && lastResult == 1
    counter_spins = counter_spins + 1; % reads if a magnet is detected at the hall sensor. If it has, and the last time the loop ran, there was no
magnet, then add a count to the spins for the wind exhibit
end

lastResult =readDigitalPin(a, 'A0');

% Solar Exhibit
if solartimer<1 % this timer counts down every loop
  random_num = randi(5) + 2; % randomly sets the light to be on for a value between 2 and 7 seconds
  solartimer = random_num;
  if mod(solarcounter, 2) == 1 % if the counter is odd, the light is off
    writeDigitalPin(a,led_pin,false);
    light = 0;
  end
  if mod(solarcounter, 2) == 0 % if the counter is even, the light is on
    writeDigitalPin(a,led_pin,true);
    light = 1;
  end
  solarcounter = solarcounter+1; %everytime the timer resets, this counter rises, causeing the light to switch between on and off
end
solartimer=solartimer-.2; %subtracts a fifth of a second from the time every time the loop runs

button=readDigitalPin(a, button_pin);
if button == 1 && light ==1
  solarseconds = solarseconds + .2;% if the button is pressed and the light is on, the number of seconds held rises
```

```
            end



%                pause(.09);
            if (mod(time,5)==0)
            app.TimerGauge.Value = 61-time/5;% displays a timer using the for loops value
            end

            %% Calculations
                        total_solar_energy = solarseconds * .04;  %% in gigawatts with 200000 solar panels running for this amount of seconds
app.SolarEnergyCapturedGauge.Value = solarseconds;

           total_wind_energy = counter_spins * .05;  %% in gigawatts with 1000 windmills spinning this many times
           app.WindEnergyCapturedGauge.Value = counter_spins;

           total_nuclear_energy = counter_marbles * .48;  %% in gigawatts with the same mass of uranium as the user collected in marbles

           if counter_marbles < 20
          app.UraniumPiecesCollectedGauge.Value = counter_marbles;
           end
          energy = total_solar_energy +  total_wind_energy  + total_nuclear_energy; % combines all of the energies that the user collected


if energy > .4 % first threshold that the user can light up (moby sound plays)
   writeDigitalPin(a,led1,true);

   play(playerbeep);
end
if energy > 1 % second threshold that the user can light up (moby sound plays)

   writeDigitalPin(a,led2,true);
   play(playerbeep);

end
if energy > 3% third threshold that the user can light up (moby sound plays)
   writeDigitalPin(a,led3,true);

   play(playerbeep);
end
if energy > 4% fourth threshold that the user can light up (moby sound plays)
   writeDigitalPin(a,led4,true);

   play(playerbeep);
end
if energy > 7% fifth threshold that the user can light up (moby sound plays)
   writeDigitalPin(a,led5,true);
```

```
    play(playerbeep);
end
app.TotalenergyinGWhEditField.Value = energy;

end
    app.UraniumPiecesCollectedGauge.Visible = 0; % active game screen dissapears
    app.WindEnergyCapturedGauge.Visible = 0;
    app.SolarEnergyCapturedGauge.Visible = 0;
    app.UraniumPiecesCollectedGaugeLabel.Visible = 0;
    app.WindEnergyCapturedGaugeLabel.Visible = 0;
    app.SolarEnergyCapturedGaugeLabel.Visible = 0;
    app.centermessage.Visible = 0;
    app.TotalenergyinGWhEditField.Visible =0;
    app.TotalenergyinGWhEditFieldLabel.Visible =0;
    app.TimesupLabel.Visible =1;
    %END SOUND
    pause(2)
    app.TimesupLabel.Visible =0;

    app.PresstheButtontoStartLabel.Text = 'Press the Button to Restart!';

    app.greatjobtextbubble.Visible = 1; % end of game results appear
    app.goodjobmoby.Visible = 1;
    app.GreatJobLabel.Visible = 1;
    app.ofyourenergycamefromsolarEditField.Visible = 1;
    app.ofyourenergycamefromwindEditField.Visible = 1;
    app.ofyourenergycamefromnuclearEditField.Visible = 1;
    app.ofyourenergycamefromsolarEditFieldLabel.Visible = 1;
    app.ofyourenergycamefromwindEditFieldLabel.Visible = 1;
    app.ofyourenergycamefromnuclearEditFieldLabel.Visible = 1;

    app.endmessage.Visible = 1;
    if energy > 0
    app.ofyourenergycamefromsolarEditField.Value = 100*total_solar_energy/energy;
    app.ofyourenergycamefromwindEditField.Value = 100*total_wind_energy/energy;
    app.ofyourenergycamefromnuclearEditField.Value = 100*total_nuclear_energy/energy;
    else
    app.ofyourenergycamefromsolarEditField.Value = 0;
    app.ofyourenergycamefromwindEditField.Value = 0;
    app.ofyourenergycamefromnuclearEditField.Value = 0;

    end


app.TotalenergyinGWhEditField.Value = energy; % displays total energy

pause(15); %allows the user to read their results
```

```
%resets to original screen after this pause
app.StartButton.Visible = 1;
app.all3characters.Visible = 1;
app.startmoby.Visible = 1;
app.PresstheButtontoStartLabel.Visible = 1;
app.timnmoby.Visible = 1;

    app.UraniumPiecesCollectedGauge.Visible = 0;
    app.WindEnergyCapturedGauge.Visible = 0;
    app.SolarEnergyCapturedGauge.Visible = 0;
    app.UraniumPiecesCollectedGaugeLabel.Visible = 0;
    app.WindEnergyCapturedGaugeLabel.Visible = 0;
    app.SolarEnergyCapturedGaugeLabel.Visible = 0;
    app.centermessage.Visible = 0;
    app.annie.Visible = 0;
    app.TimerGauge.Visible = 0;
    app.TimerGaugeLabel.Visible = 0;


    app.ofyourenergycamefromsolarEditFieldLabel.Visible = 0;
    app.ofyourenergycamefromwindEditFieldLabel.Visible = 0;
    app.ofyourenergycamefromnuclearEditFieldLabel.Visible = 0;
    app.goodjobmoby.Visible = 0;
    app.GreatJobLabel.Visible = 0;
    app.greatjobtextbubble.Visible = 0;
    app.ofyourenergycamefromsolarEditField.Visible = 0;
    app.ofyourenergycamefromwindEditField.Visible = 0;
    app.ofyourenergycamefromnuclearEditField.Visible = 0;
    app.endmessage.Visible = 0;


    app.TotalenergyinGWhEditField.Value = 0;
    app.WindEnergyCapturedGauge.Value = 0;
    app.SolarEnergyCapturedGauge.Value = 0;
    app.UraniumPiecesCollectedGauge.Value = 0;





    end
  end

  % Component initialization
  methods (Access = private)

    % Create UIFigure and components
```

```
function createComponents(app)

    % Create UIFigure and hide until all components are created
    app.UIFigure = uifigure('Visible', 'off');
    app.UIFigure.Position = [100 100 1300 644];
    app.UIFigure.Name = 'MATLAB App';

    % Create background
    app.background = uiimage(app.UIFigure);
    app.background.Position = [-233 -229 1829 913];
    app.background.ImageSource = 'istockphoto-506611752-170667a.jpg';

    % Create PresstheButtontoStartLabel
    app.PresstheButtontoStartLabel = uilabel(app.UIFigure);
    app.PresstheButtontoStartLabel.HorizontalAlignment = 'center';
    app.PresstheButtontoStartLabel.FontName = 'Comic Sans MS';
    app.PresstheButtontoStartLabel.FontSize = 25;
    app.PresstheButtontoStartLabel.Position = [462 489 381 49];
    app.PresstheButtontoStartLabel.Text = 'Press the Button to Start!';

    % Create StartButton
    app.StartButton = uibutton(app.UIFigure, 'push');
    app.StartButton.ButtonPushedFcn = createCallbackFcn(app, @StartButtonPushed, true);
    app.StartButton.FontName = 'Comic Sans MS';
    app.StartButton.FontSize = 40;
    app.StartButton.Position = [441 176 422 150];
    app.StartButton.Text = 'Start!';

    % Create TimerGaugeLabel
    app.TimerGaugeLabel = uilabel(app.UIFigure);
    app.TimerGaugeLabel.BackgroundColor = [1 1 1];
    app.TimerGaugeLabel.HorizontalAlignment = 'center';
    app.TimerGaugeLabel.FontName = 'Comic Sans MS';
    app.TimerGaugeLabel.FontSize = 20;
    app.TimerGaugeLabel.Visible = 'off';
    app.TimerGaugeLabel.Position = [1127 337 88 39];
    app.TimerGaugeLabel.Text = 'Timer';

    % Create TimerGauge
    app.TimerGauge = uigauge(app.UIFigure, 'circular');
    app.TimerGauge.Limits = [0 60];
    app.TimerGauge.MajorTicks = [0 10 20 30 40 50 60];
    app.TimerGauge.MajorTickLabels = {'0', '10', '20', '30', '40', '50', '60'};
    app.TimerGauge.MinorTicks = [0 2 4 6 8 10 12 14 16 18 20 22 24 26 28 30 32 34 36 38 40 42 44 46 48 50 52 54 56 58 60];
    app.TimerGauge.Visible = 'off';
    app.TimerGauge.Position = [1049 390 244 244];

    % Create all3characters
```

```
app.all3characters = uiimage(app.UIFigure);
app.all3characters.Position = [0 -19 761 209];
app.all3characters.ImageSource = 'clipart_annie-moby-tim2-removebg-preview.png';

% Create startmoby
app.startmoby = uiimage(app.UIFigure);
app.startmoby.Position = [523 287 258 160];
app.startmoby.ImageSource = 'animated_moby_look.8ce26a9.png';

% Create timnmoby
app.timnmoby = uiimage(app.UIFigure);
app.timnmoby.Position = [-142 272 561 391];
app.timnmoby.ImageSource = '232-2328975_tim-and-moby-removebg-preview.png';

% Create annie
app.annie = uiimage(app.UIFigure);
app.annie.Visible = 'off';
app.annie.Position = [796 303 404 363];
app.annie.ImageSource = 'Annie.png';

% Create TotalenergyinGWhEditFieldLabel
app.TotalenergyinGWhEditFieldLabel = uilabel(app.UIFigure);
app.TotalenergyinGWhEditFieldLabel.BackgroundColor = [1 1 1];
app.TotalenergyinGWhEditFieldLabel.HorizontalAlignment = 'center';
app.TotalenergyinGWhEditFieldLabel.FontName = 'Comic Sans MS';
app.TotalenergyinGWhEditFieldLabel.FontSize = 25;
app.TotalenergyinGWhEditFieldLabel.Visible = 'off';
app.TotalenergyinGWhEditFieldLabel.Position = [500 130 263 38];
app.TotalenergyinGWhEditFieldLabel.Text = 'Total energy in GWh: ';

% Create TotalenergyinGWhEditField
app.TotalenergyinGWhEditField = uieditfield(app.UIFigure, 'numeric');
app.TotalenergyinGWhEditField.HorizontalAlignment = 'center';
app.TotalenergyinGWhEditField.FontName = 'Comic Sans MS';
app.TotalenergyinGWhEditField.FontSize = 25;
app.TotalenergyinGWhEditField.Visible = 'off';
app.TotalenergyinGWhEditField.Position = [762 131 43 37];

% Create greatjobtextbubble
app.greatjobtextbubble = uiimage(app.UIFigure);
app.greatjobtextbubble.Visible = 'off';
app.greatjobtextbubble.Position = [1037 131 245 193];
app.greatjobtextbubble.ImageSource = 'words-clipart-kid-13.png';

% Create goodjobmoby
app.goodjobmoby = uiimage(app.UIFigure);
app.goodjobmoby.Visible = 'off';
app.goodjobmoby.Position = [795 -88 380 320];
```

```
app.goodjobmoby.ImageSource = 'tumblr_ortn2kowvi1vgr0mso1_400-removebg-preview (1).png';

% Create GreatJobLabel
app.GreatJobLabel = uilabel(app.UIFigure);
app.GreatJobLabel.FontName = 'Comic Sans MS';
app.GreatJobLabel.FontSize = 20;
app.GreatJobLabel.Visible = 'off';
app.GreatJobLabel.Position = [1102 243 106 31];
app.GreatJobLabel.Text = 'Great Job!';

% Create UraniumPiecesCollectedGaugeLabel
app.UraniumPiecesCollectedGaugeLabel = uilabel(app.UIFigure);
app.UraniumPiecesCollectedGaugeLabel.BackgroundColor = [1 1 1];
app.UraniumPiecesCollectedGaugeLabel.HorizontalAlignment = 'center';
app.UraniumPiecesCollectedGaugeLabel.FontName = 'Comic Sans MS';
app.UraniumPiecesCollectedGaugeLabel.FontSize = 25;
app.UraniumPiecesCollectedGaugeLabel.Visible = 'off';
app.UraniumPiecesCollectedGaugeLabel.Position = [58 366 315 48];
app.UraniumPiecesCollectedGaugeLabel.Text = 'Uranium Pieces Collected';

% Create UraniumPiecesCollectedGauge
app.UraniumPiecesCollectedGauge = uigauge(app.UIFigure, 'linear');
app.UraniumPiecesCollectedGauge.Limits = [0 20];
app.UraniumPiecesCollectedGauge.MajorTicks = [0 10 20];
app.UraniumPiecesCollectedGauge.MajorTickLabels = {'None', 'Half Capacity', 'Full', ''};
app.UraniumPiecesCollectedGauge.MinorTicks = [];
app.UraniumPiecesCollectedGauge.Visible = 'off';
app.UraniumPiecesCollectedGauge.FontSize = 25;
app.UraniumPiecesCollectedGauge.Position = [383 361 558 65];

% Create WindEnergyCapturedGaugeLabel
app.WindEnergyCapturedGaugeLabel = uilabel(app.UIFigure);
app.WindEnergyCapturedGaugeLabel.BackgroundColor = [1 1 1];
app.WindEnergyCapturedGaugeLabel.HorizontalAlignment = 'center';
app.WindEnergyCapturedGaugeLabel.FontName = 'Comic Sans MS';
app.WindEnergyCapturedGaugeLabel.FontSize = 25;
app.WindEnergyCapturedGaugeLabel.Visible = 'off';
app.WindEnergyCapturedGaugeLabel.Position = [65 279 285 48];
app.WindEnergyCapturedGaugeLabel.Text = 'Wind Energy Captured';

% Create WindEnergyCapturedGauge
app.WindEnergyCapturedGauge = uigauge(app.UIFigure, 'linear');
app.WindEnergyCapturedGauge.Limits = [0 40];
app.WindEnergyCapturedGauge.MajorTicks = [0 20 40];
app.WindEnergyCapturedGauge.MajorTickLabels = {'None', 'Half Capacity', 'Full', ''};
app.WindEnergyCapturedGauge.MinorTicks = [];
app.WindEnergyCapturedGauge.Visible = 'off';
app.WindEnergyCapturedGauge.FontSize = 25;
```

```
app.WindEnergyCapturedGauge.Position = [382 272 558 65];

% Create SolarEnergyCapturedGaugeLabel
app.SolarEnergyCapturedGaugeLabel = uilabel(app.UIFigure);
app.SolarEnergyCapturedGaugeLabel.BackgroundColor = [1 1 1];
app.SolarEnergyCapturedGaugeLabel.HorizontalAlignment = 'center';
app.SolarEnergyCapturedGaugeLabel.FontName = 'Comic Sans MS';
app.SolarEnergyCapturedGaugeLabel.FontSize = 25;
app.SolarEnergyCapturedGaugeLabel.Visible = 'off';
app.SolarEnergyCapturedGaugeLabel.Position = [64 194 287 48];
app.SolarEnergyCapturedGaugeLabel.Text = 'Solar Energy Captured';

% Create SolarEnergyCapturedGauge
app.SolarEnergyCapturedGauge = uigauge(app.UIFigure, 'linear');
app.SolarEnergyCapturedGauge.Limits = [0 40];
app.SolarEnergyCapturedGauge.MajorTicks = [0 20 40];
app.SolarEnergyCapturedGauge.MajorTickLabels = {'None', 'Half Capacity', 'Full', ''};
app.SolarEnergyCapturedGauge.MinorTicks = [];
app.SolarEnergyCapturedGauge.Visible = 'off';
app.SolarEnergyCapturedGauge.FontSize = 25;
app.SolarEnergyCapturedGauge.Position = [382 187 559 65];

% Create ofyourenergycamefromnuclearEditFieldLabel
app.ofyourenergycamefromnuclearEditFieldLabel = uilabel(app.UIFigure);
app.ofyourenergycamefromnuclearEditFieldLabel.BackgroundColor = [1 1 1];
app.ofyourenergycamefromnuclearEditFieldLabel.FontName = 'Comic Sans MS';
app.ofyourenergycamefromnuclearEditFieldLabel.FontSize = 25;
app.ofyourenergycamefromnuclearEditFieldLabel.Visible = 'off';
app.ofyourenergycamefromnuclearEditFieldLabel.Position = [487 424 435 38];
app.ofyourenergycamefromnuclearEditFieldLabel.Text = '% of your energy came from nuclear';

% Create ofyourenergycamefromnuclearEditField
app.ofyourenergycamefromnuclearEditField = uieditfield(app.UIFigure, 'numeric');
app.ofyourenergycamefromnuclearEditField.FontSize = 25;
app.ofyourenergycamefromnuclearEditField.Visible = 'off';
app.ofyourenergycamefromnuclearEditField.Position = [417 425 71 37];

% Create ofyourenergycamefromwindEditFieldLabel
app.ofyourenergycamefromwindEditFieldLabel = uilabel(app.UIFigure);
app.ofyourenergycamefromwindEditFieldLabel.BackgroundColor = [1 1 1];
app.ofyourenergycamefromwindEditFieldLabel.FontName = 'Comic Sans MS';
app.ofyourenergycamefromwindEditFieldLabel.FontSize = 25;
app.ofyourenergycamefromwindEditFieldLabel.Visible = 'off';
app.ofyourenergycamefromwindEditFieldLabel.Position = [488 370 401 38];
app.ofyourenergycamefromwindEditFieldLabel.Text = '% of your energy came from wind';

% Create ofyourenergycamefromwindEditField
app.ofyourenergycamefromwindEditField = uieditfield(app.UIFigure, 'numeric');
```

```
app.ofyourenergycamefromwindEditField.FontSize = 25;
app.ofyourenergycamefromwindEditField.Visible = 'off';
app.ofyourenergycamefromwindEditField.Position = [417 371 71 37];

% Create ofyourenergycamefromsolarEditFieldLabel
app.ofyourenergycamefromsolarEditFieldLabel = uilabel(app.UIFigure);
app.ofyourenergycamefromsolarEditFieldLabel.BackgroundColor = [1 1 1];
app.ofyourenergycamefromsolarEditFieldLabel.FontName = 'Comic Sans MS';
app.ofyourenergycamefromsolarEditFieldLabel.FontSize = 25;
app.ofyourenergycamefromsolarEditFieldLabel.Visible = 'off';
app.ofyourenergycamefromsolarEditFieldLabel.Position = [487 313 407 38];
app.ofyourenergycamefromsolarEditFieldLabel.Text = '% of your energy came from solar';

% Create ofyourenergycamefromsolarEditField
app.ofyourenergycamefromsolarEditField = uieditfield(app.UIFigure, 'numeric');
app.ofyourenergycamefromsolarEditField.FontSize = 25;
app.ofyourenergycamefromsolarEditField.Visible = 'off';
app.ofyourenergycamefromsolarEditField.Position = [417 313 71 37];

% Create centermessage
app.centermessage = uilabel(app.UIFigure);
app.centermessage.HorizontalAlignment = 'center';
app.centermessage.VerticalAlignment = 'top';
app.centermessage.WordWrap = 'on';
app.centermessage.FontName = 'Comic Sans MS';
app.centermessage.FontSize = 40;
app.centermessage.Visible = 'off';
app.centermessage.Position = [74 105 1155 210];
app.centermessage.Text = 'You will have 1 Minute to generate as much power as possible. Hint : One type of energy is more effiecient than the others!!!';

% Create endmessage
app.endmessage = uilabel(app.UIFigure);
app.endmessage.HorizontalAlignment = 'center';
app.endmessage.WordWrap = 'on';
app.endmessage.FontName = 'Comic Sans MS';
app.endmessage.FontSize = 20;
app.endmessage.Visible = 'off';
app.endmessage.Position = [299 148 540 140];
app.endmessage.Text = 'Can you guess which type of energy is the most efficient?  Try again and see if you can generate more energy using that one!';

% Create solarmessage
app.solarmessage = uilabel(app.UIFigure);
app.solarmessage.BackgroundColor = [0.9294 0.6941 0.1255];
app.solarmessage.HorizontalAlignment = 'center';
app.solarmessage.WordWrap = 'on';
app.solarmessage.FontName = 'Comic Sans MS';
```

```
        app.solarmessage.FontSize = 40;
        app.solarmessage.Visible = 'off';
        app.solarmessage.Position = [287 139 727 241];
        app.solarmessage.Text = 'For Solar, press and hold the button while the sun is shining to capture energy!';

        % Create nucmessage
        app.nucmessage = uilabel(app.UIFigure);
        app.nucmessage.BackgroundColor = [0.7176 0.2745 1];
        app.nucmessage.HorizontalAlignment = 'center';
        app.nucmessage.WordWrap = 'on';
        app.nucmessage.FontName = 'Comic Sans MS';
        app.nucmessage.FontSize = 40;
        app.nucmessage.Visible = 'off';
        app.nucmessage.Position = [287 139 727 241];
        app.nucmessage.Text = 'For Nuclear, use the green handle to move the uranium marbles into the factory to power it!';

        % Create windmessage
        app.windmessage = uilabel(app.UIFigure);
        app.windmessage.BackgroundColor = [0.302 0.7451 0.9333];
        app.windmessage.HorizontalAlignment = 'center';
        app.windmessage.WordWrap = 'on';
        app.windmessage.FontName = 'Comic Sans MS';
        app.windmessage.FontSize = 40;
        app.windmessage.Visible = 'off';
        app.windmessage.Position = [287 139 727 241];
        app.windmessage.Text = 'For wind, use the handle to spin the turbine and generate power!';

        % Create TimesupLabel
        app.TimesupLabel = uilabel(app.UIFigure);
        app.TimesupLabel.HorizontalAlignment = 'center';
        app.TimesupLabel.FontSize = 100;
        app.TimesupLabel.Visible = 'off';
        app.TimesupLabel.Position = [427 216 448 124];
        app.TimesupLabel.Text = {'Times up!'; ''};

        % Show the figure after all components are created
        app.UIFigure.Visible = 'on';
    end
end

% App creation and deletion
methods (Access = public)

    % Construct app
    function app = app_museum_exhibit

        % Create UIFigure and components
        createComponents(app)
```

```
        % Register the app with App Designer
        registerApp(app, app.UIFigure)

        if nargout == 0
            clear app
        end
    end

    % Code that executes before app deletion
    function delete(app)

        % Delete UIFigure when app is deleted
        delete(app.UIFigure)
    end
  end
end
```

GUI

Start screen

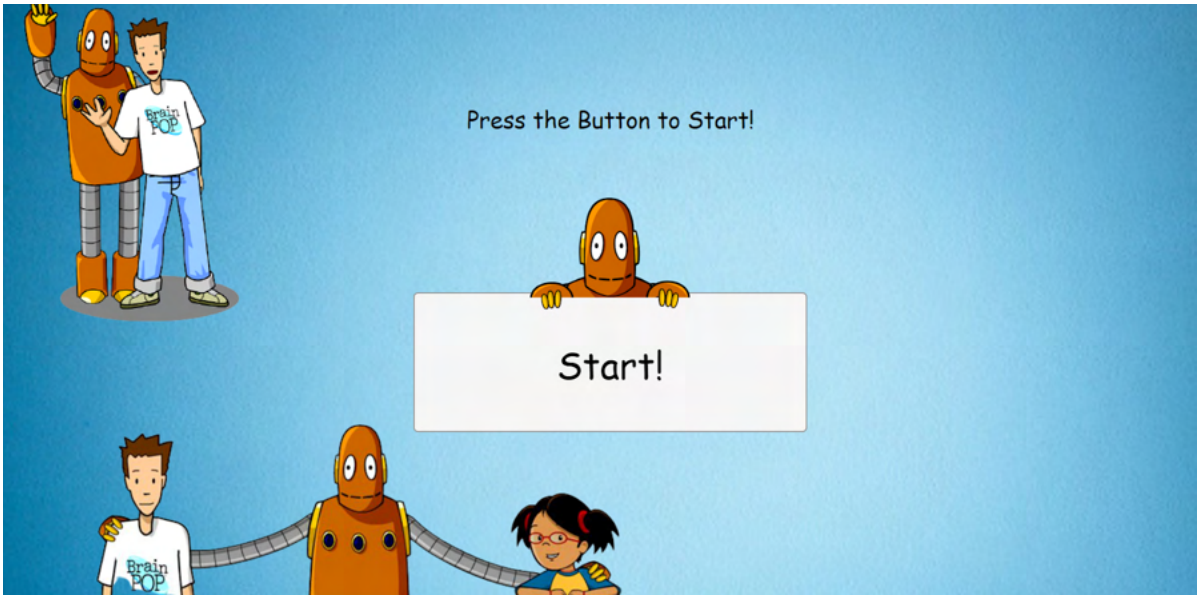

Actively playing screen

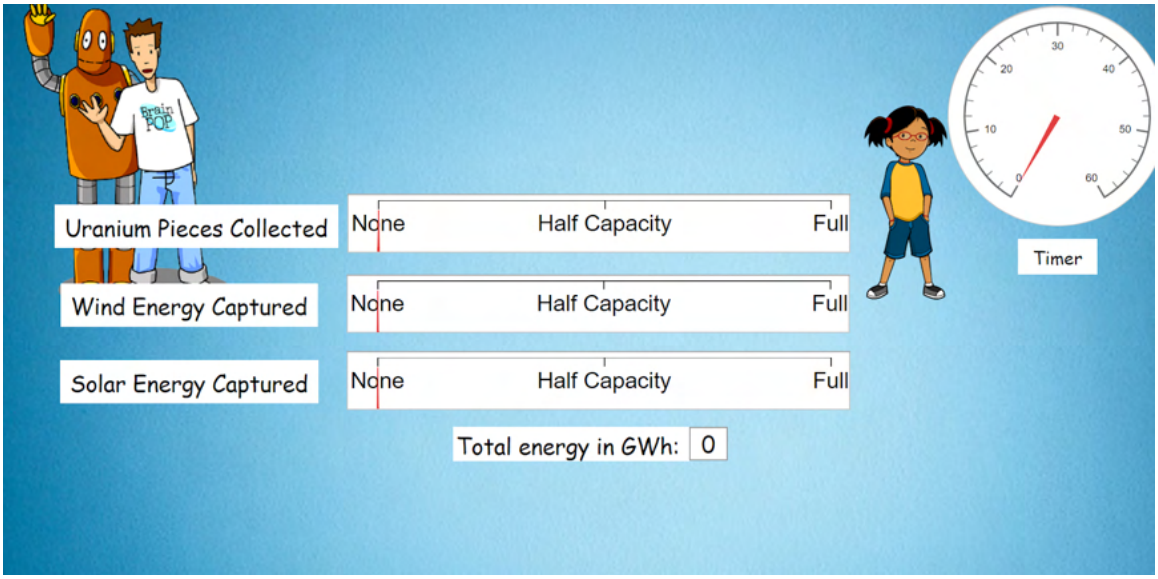

Final screen

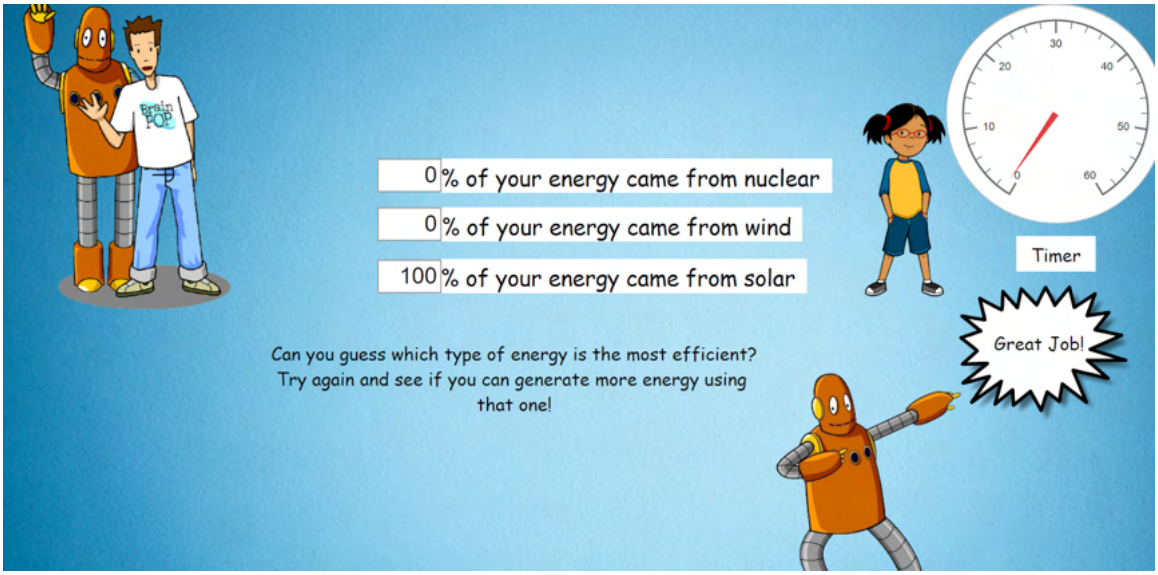

Appendix F – Wire Diagrams for SparkFun Boards

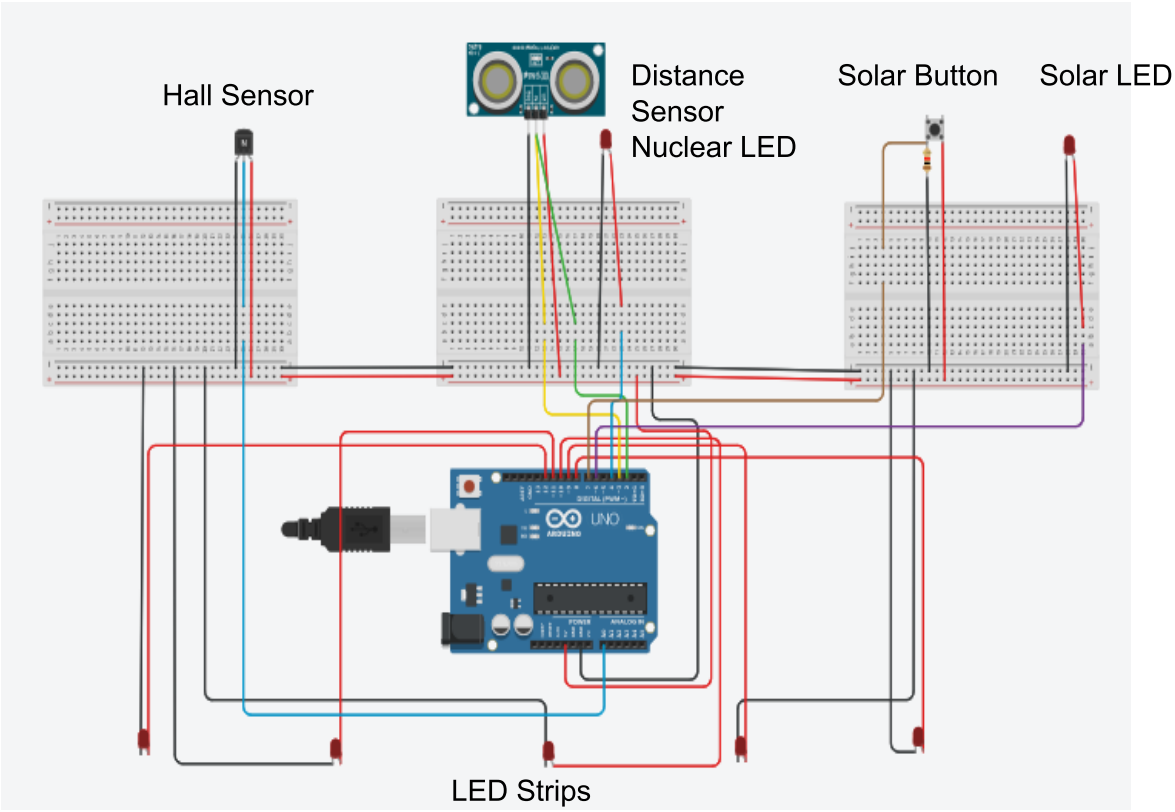

○ Appendix G – Photo Log

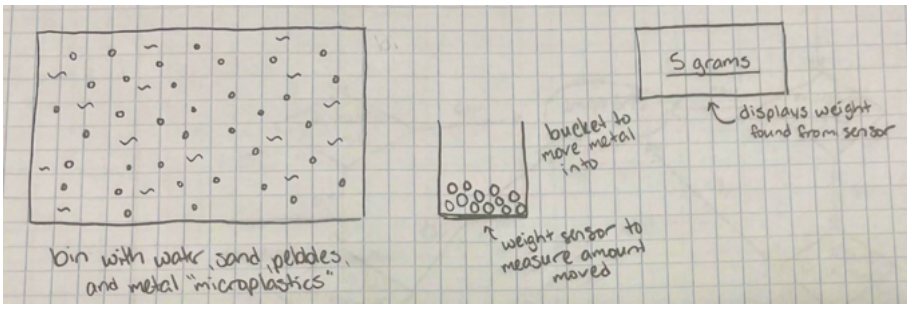

Microplastic Extraction Exhibit Sketch by Lauren Ward

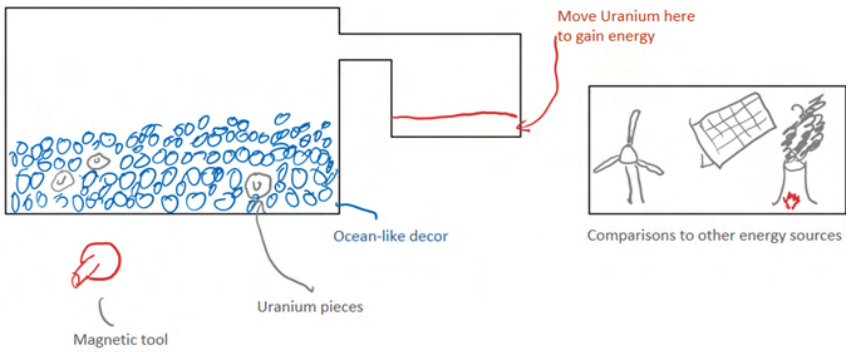

Uranium Seawater Extraction Exhibit Sketch by Nicholas Gorycki

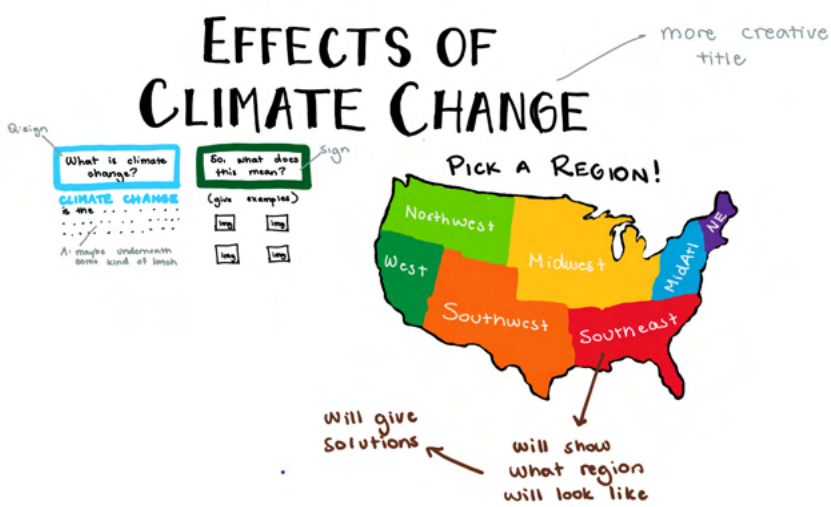

Regional Climate Change Exhibit Sketch by Kathleen Tschoepe

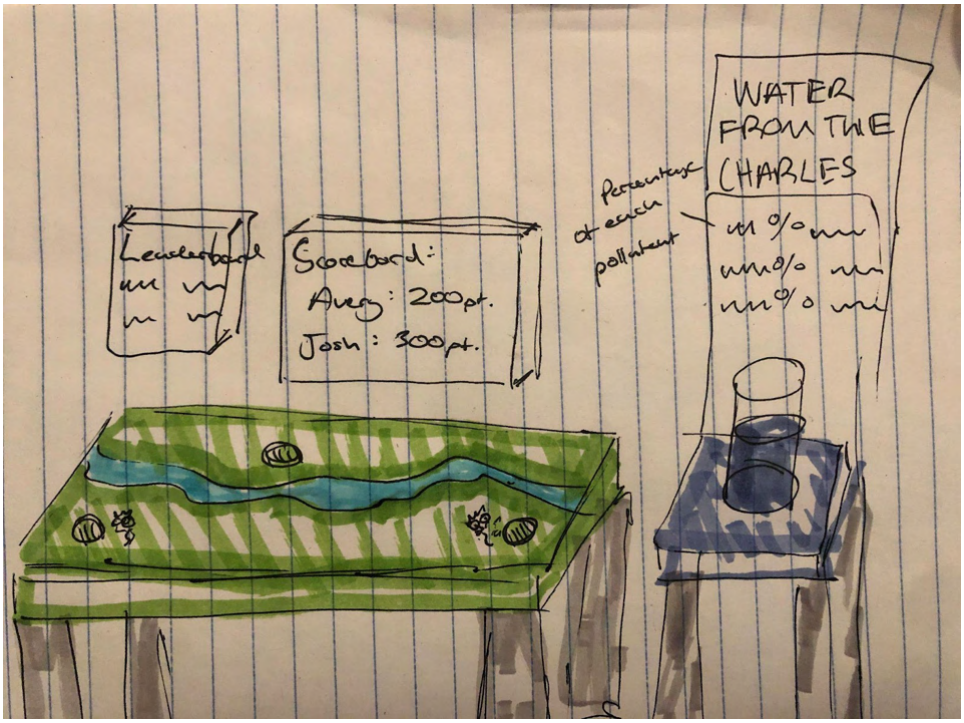

Stormwater Management Exhibit Sketch by Zeynep Ay

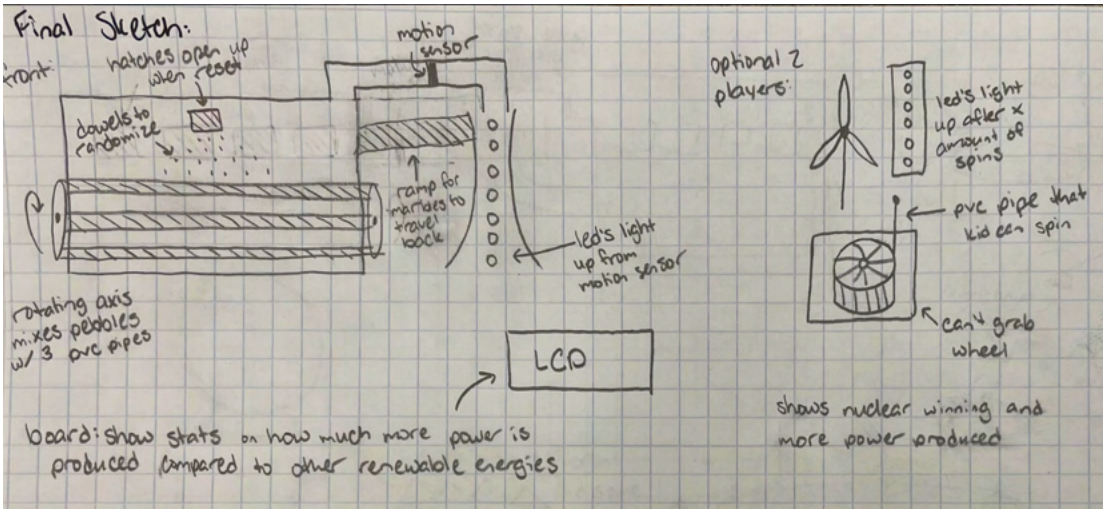

First Iteration of Nuclear Energy Exhibit with Comparison to Wind Energy

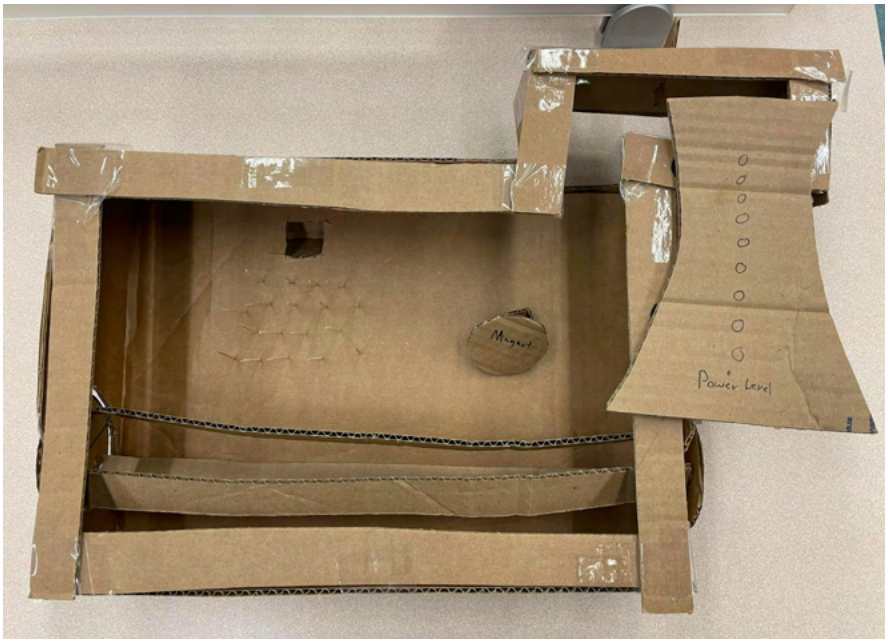

Cardboard Prototype of Nuclear Energy Exhibit

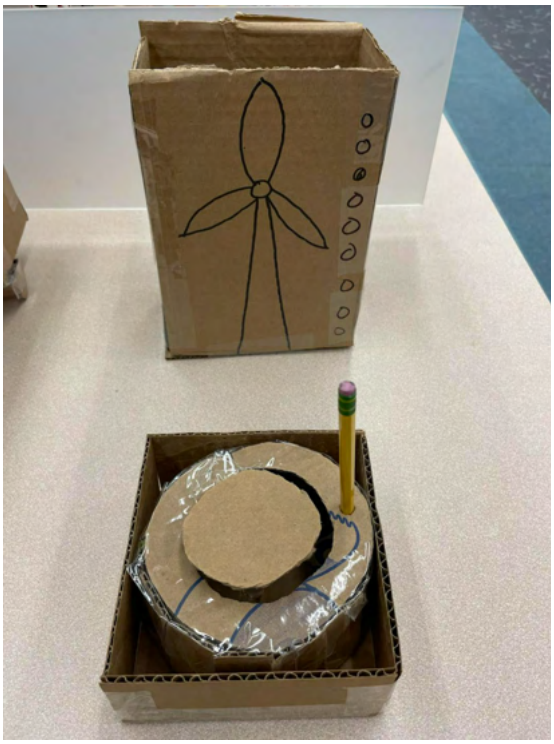

Cardboard Wheel Prototype Simulating Wind Energy Component

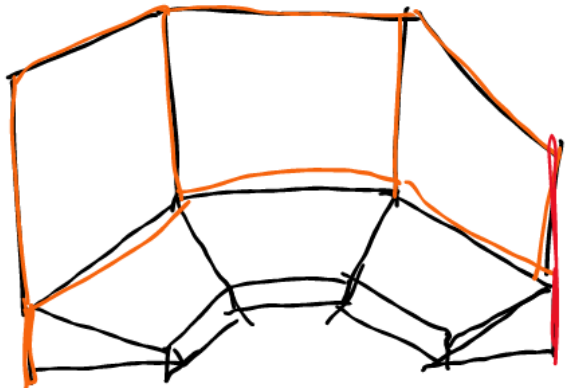

New Sketch of Potential Exhibit Idea by Mentor Carrie Tam

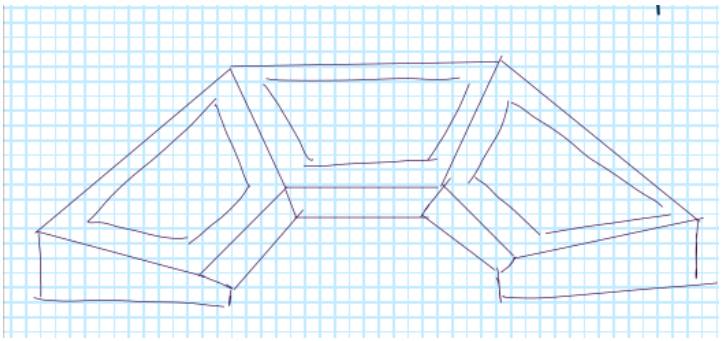

Redrawn Sketch of Three-Component Exhibit

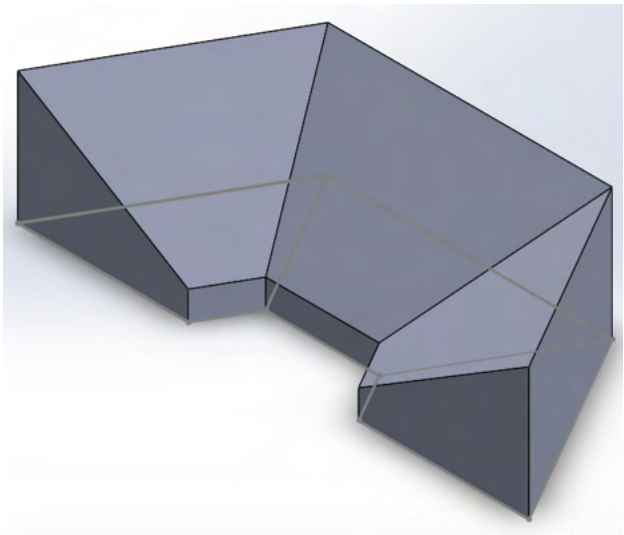

SOLIDWORKS Sketch of Three-Component Exhibit

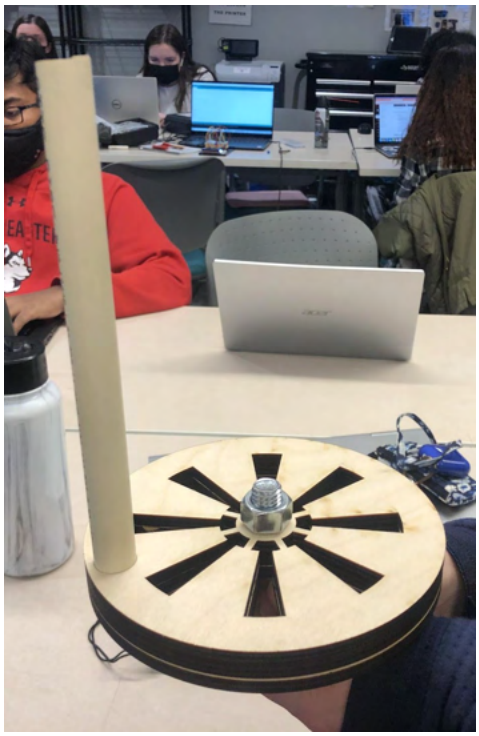

Completed Wheel with PVC Pipe, Nut, and Bolt

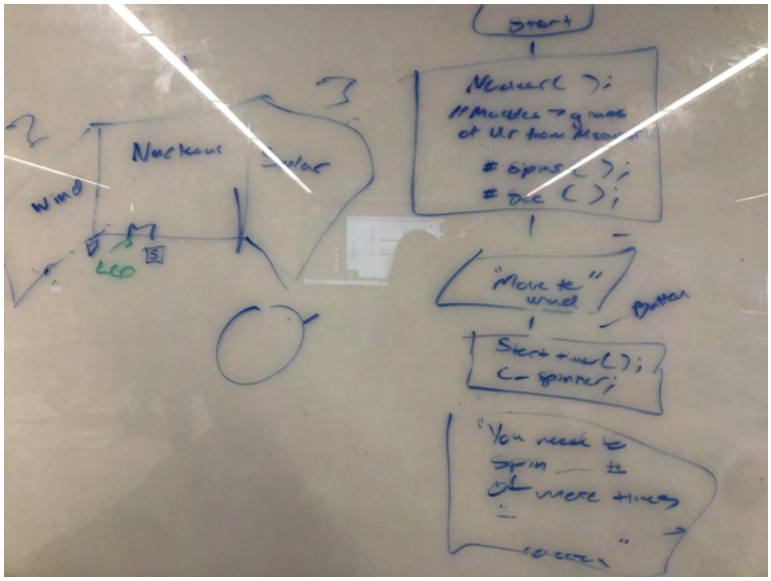

First Coding Flowchart on Whiteboard Wall in Cornerstone Class

○ 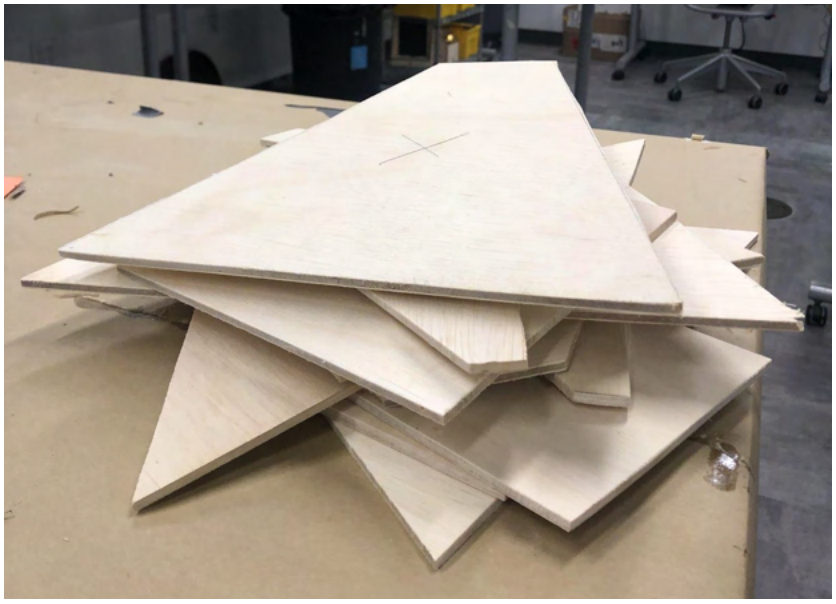

Cut Wood for Trapezoidal Boxes

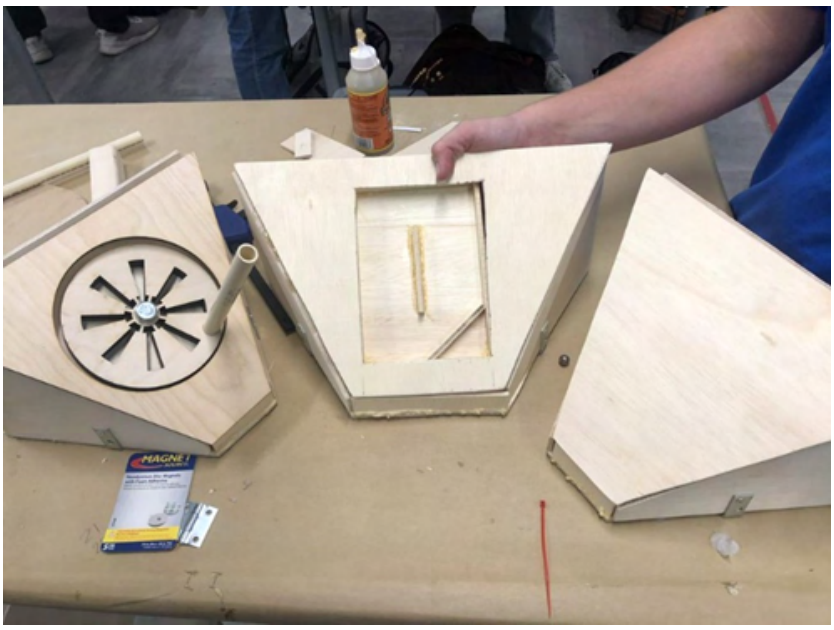

Finished Wood Prototype of Three-Component Exhibit

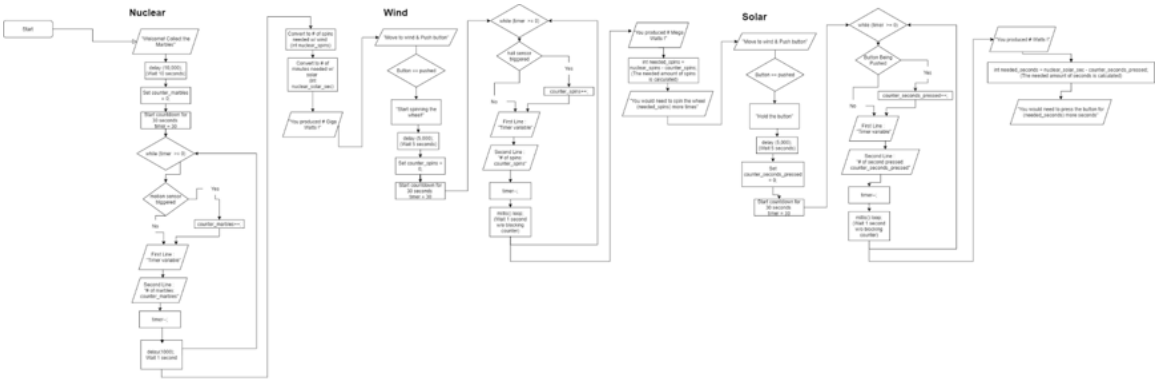

First Complete Coding Flowchart When Exhibit Had Ordered Steps

- 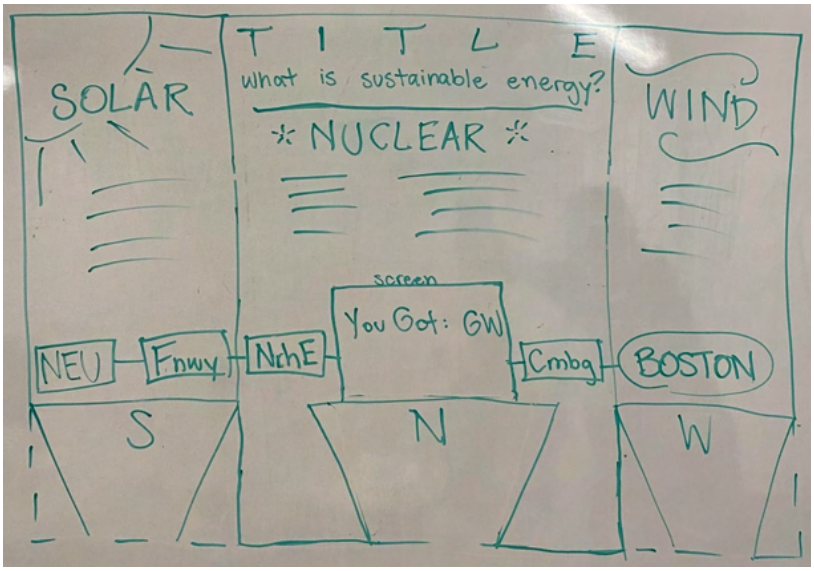

Trifold Sketch on Whiteboard during Mentor Meeting by Kathleen Tschoepe

- 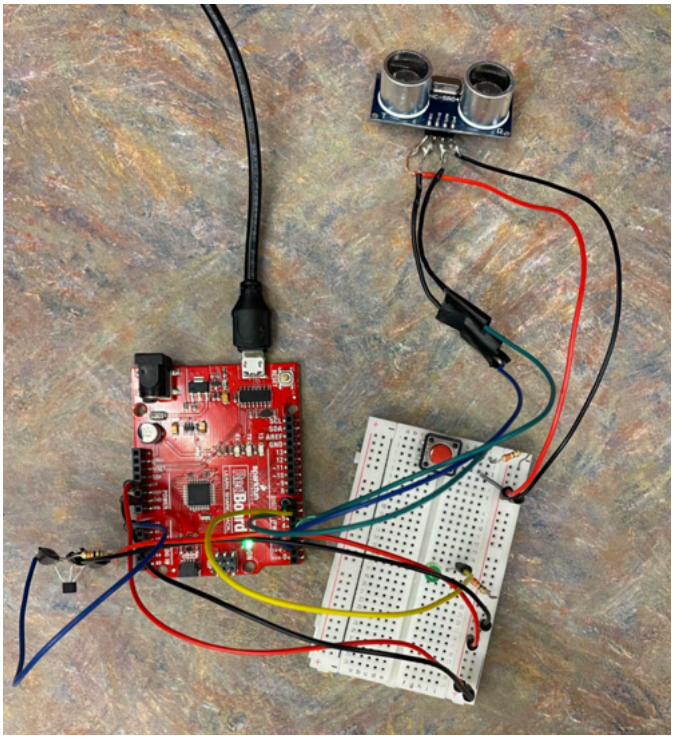

Sparkfun RedBoard, Breadboard, and Wiring Proof of Concept

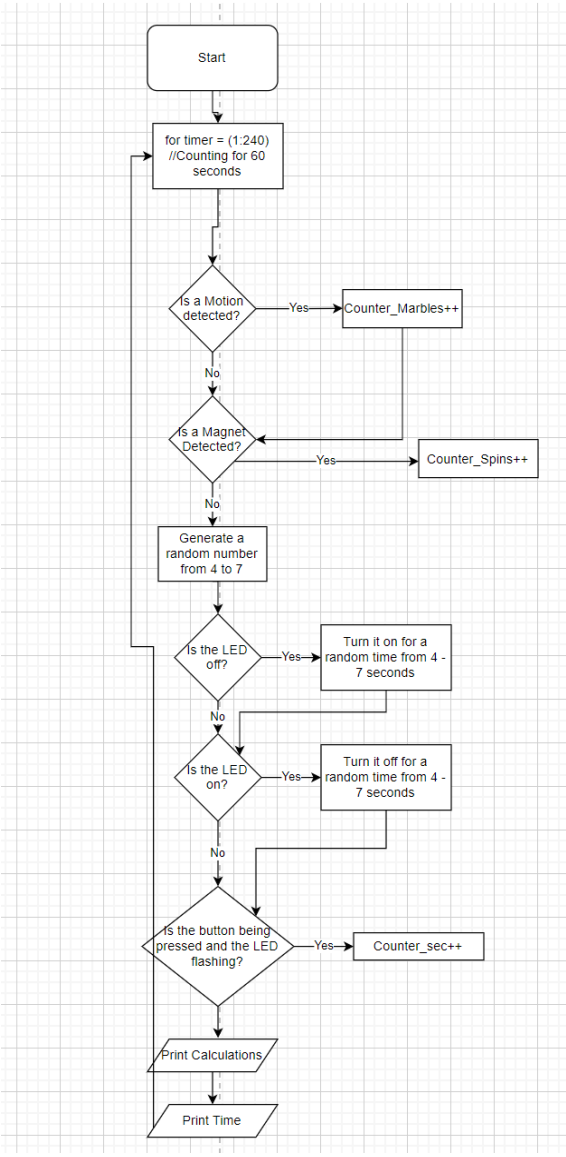

Final Coding Flowchart for Complete Museum Exhibit Project

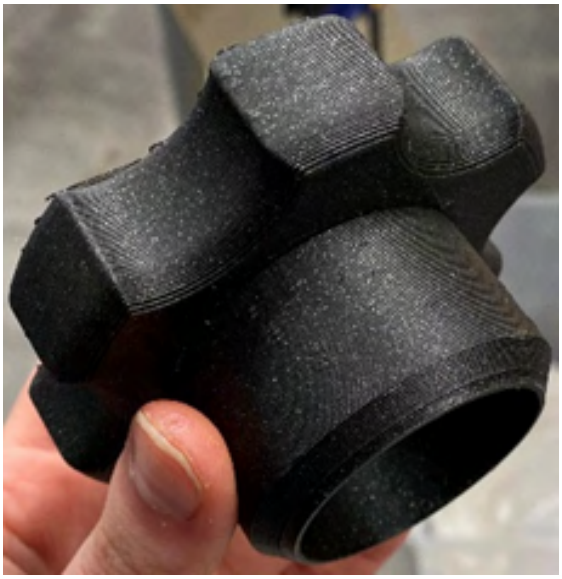

3D-Printed Handle for Wind Energy Component by Kathleen Tschoepe

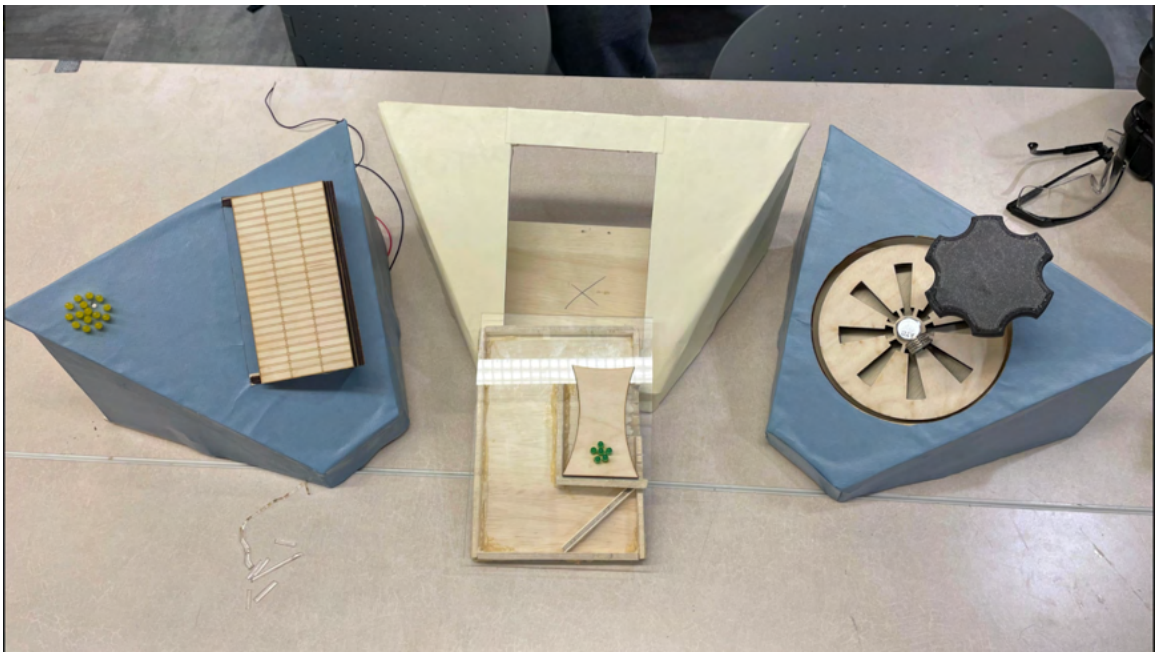

Colored Wood Prototype with Solar Panel, LED Lights, Nuclear Tower, and Clear Acrylic Covering

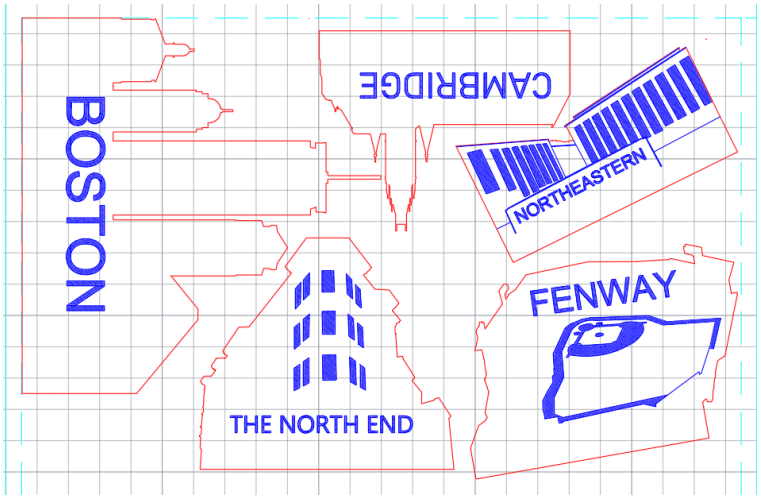

Clear Acrylic Cutouts of Boston Locations for LED Strips on Trifold Poster

Final Purple Nuclear Component of Museum Exhibit with Marbles, Lit LEDs, and Moby Image

Final Blue Wind Component of Museum Exhibit with Silver Wheel and Red Rotation Arrow

Final Yellow Solar Component of Museum Exhibit with Sun, LEDs, Button, and Blue Solar Panel

○ 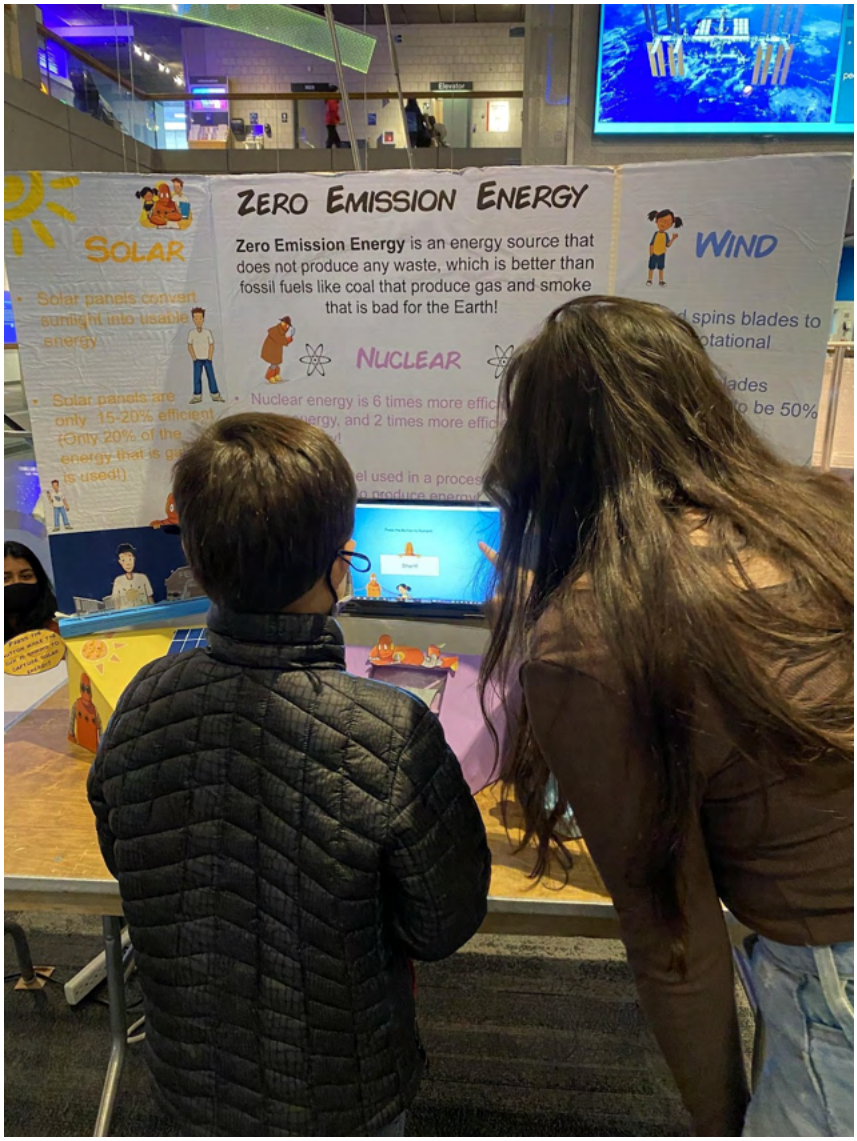

Professor Kathryn Schulte-Grahame's Son Playing with Final Project at the Boston Museum of Science

Complete Final Project at the Boston Museum of Science

- 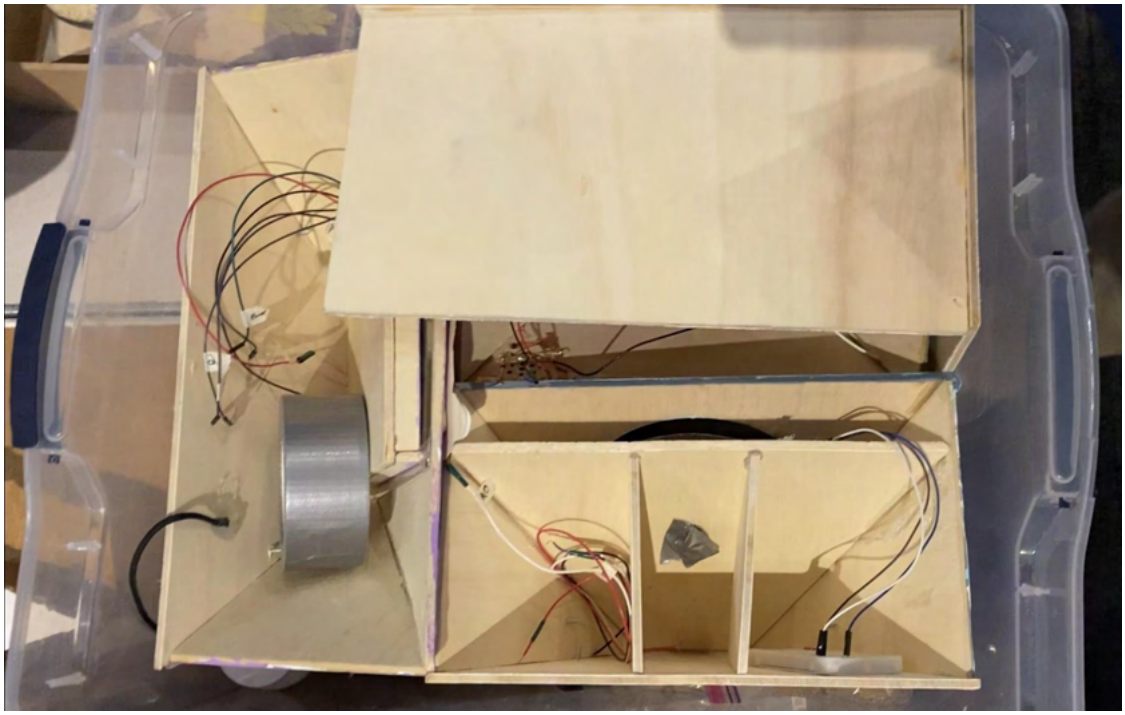

Final Project Components Fitting Inside Transportation Box

Appendix H – Final Gantt Chart

P2-Group5

*Will be updated to display each individuals' tasks as they appear

Project Start: Sun, 17-Oct-2021

Task	Assigned to:	Start	End
P2-M1	Kathleen T.	10/17/2021	10/20/2021
KDTA meeting	Team+Peer mentor	10/25/2021	10/25/2021
P2-M2	Nicholas G.	10/20/2021	10/27/2021
Prototyping	Team	10/28/2021	11/1/2021
P2-M3	Lauren W.	10/27/2021	11/3/2021
Pre-construction meeting	Team+Peer mentor	11/4/2021	11/4/2021
P2-M4	Zeynep A.	11/3/2021	11/10/2021
Construction	Team	11/6/2021	11/9/2021
Sparkfun implementation	Nick/Zeynep	11/7/2021	11/9/2021
3D printing/Laser-cutting	Lauren/Katie	11/7/2021	11/9/2021
P2-M5	Team	11/10/2021	11/17/2021
Construction	Nick/Lauren/Katie	11/13/2021	11/16/2021
Wiring and coding	Nick/Zeynep	11/15/2021	11/16/2021
P2-M6	Team	11/17/2021	12/4/2021
Finalization of code/wiring	Nick	11/16/2021	11/29/2021
GUI work	Nick/Zeynep	11/18/2021	12/1/2021
Painting	Lauren	11/24/2021	12/1/2021
Trifold printing/Aesthetics	Katie	11/21/2021	11/30/2021
Final changes	Team	11/27/2021	12/2/2021

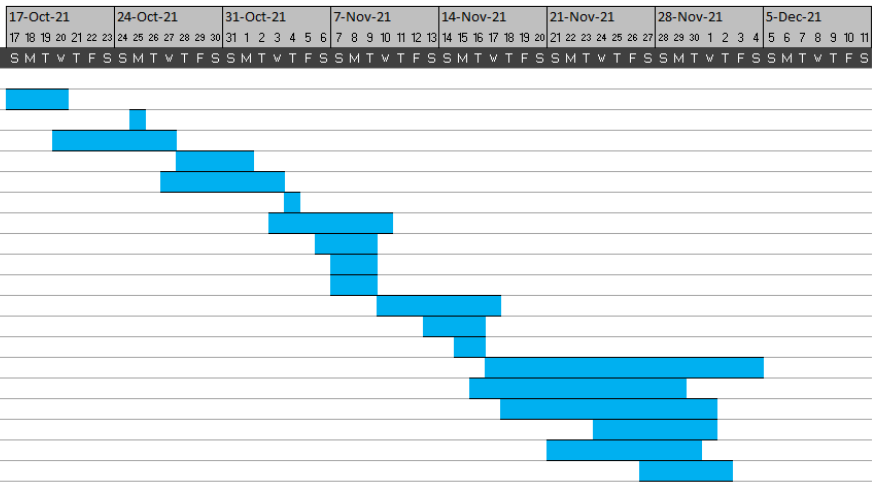

○ APPENDIX I – FINAL BUDGET

Item	Unit Value	Units	Quantity	Value	Cost	Source
Wood	$ 4.00	ea	3	$ 12.00	$ 12.00	Hardware Store
Wood Panels	$ 12.38	ea	1	$ 12.38	$ 12.38	Campus Store
Marbles	$ 5.99	ea	1	$ 5.99	$ 5.99	Amazon
Clear Acrylic	$ 9.98	ea	1	$ 9.98	$ 9.98	Campus Store
Magnets	$ 2.99	ea	1	$ 2.99	$ 2.99	Hardware Store
PVC pipes	$ 1.81	ea	1	$ 1.81	$ 1.81	Hardware Store
Mod Podge	$ 7.29	ea	1	$ 7.29	$ 7.29	BLICK
Brushes	$ 0.73	ea	3	$ 2.19	$ 2.19	BLICK
Small Paper	$ 0.80	ea	1	$ 0.80	$ 0.80	BLICK
Large Paper	$ 3.30	ea	3	$ 9.90	$ 9.90	BLICK
Copper Tape	$ 6.98	ea	1	$ 6.98	$ 6.98	Amazon
Hinges	$ 4.99	ea	1	$ 4.99	$ 4.99	Hardware Store
Ball bearing	$ 7.77	ea	1	$ 7.77	$ 7.77	Amazon
Lenovo Yoga 7I	$ 1,800.00	ea	1	$ 1,800.00	$ -	Owned
Wire	$ 0.10	ft	10	$ 1.00	$ -	FYELIC
Paint	$ 3.00	ea	6	$ 18.00	$ -	Owned
LED strip lights	$ 1.00	ft	3	$ 3.00	$ -	Another Group
LEDs	$ 3.30	ea	4	$ 13.20	$ -	SparkFun Kit
Motion Sensor	$ 3.95	ea	1	$ 3.95	$ -	SparkFun Kit
Button	$ 0.25	ea	1	$ 0.25	$ -	SparkFun Kit
Poster Board	$ 2.99	ea	1	$ 2.99	$ -	Owned
Hall Effect Sensor	$ 5.73	ea	1	$ 5.73	$ 5.73	Amazon
Totals:				$ 1,933.19	$ 90.80	