Northeastern University
College of Engineering

Cornerstone of Engineering I & II
Fall 2021 MWH 11:45-1:25, 2:50-4:30

Zero Emission Energy

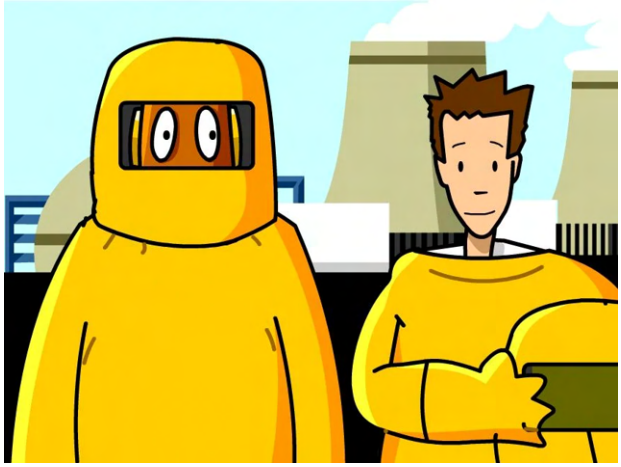

SUBMITTED BY:

Team 5: Podgemasters

Zeynep Ays' Section

Report Submitted: **10 December 2021**

ABSTRACT

We aim to create a traveling museum exhibit that teaches high school and middle school age students the importance of sustainability in engineering. The client and users need an inclusive, accessible, transportable, and interactive design. The exhibit, when fully set up, must sit in a 36" wide by 28" deep tabletop, and it must be safe during both setup and transit. The total cost of the exhibit should be less than $100 when finally produced and, when in transit, must fit within the provided box.

Our solution is to design, create, and implement a museum exhibit that teaches children about nuclear energy as a sustainable and renewable energy source while destigmatizing its use. Additionally, we aim to teach children the difference in energy efficiency between nuclear energy, wind energy, and solar energy through game-based learning. To do so, we had the user produce as much power as they could in a limited time frame given the option between all three types of energy. This is simulated through three separate activities that represent each type of energy, and they can be played simultaneously throughout this time period. According to our feedback survey given to users following their interaction with our exhibit, the visitors rated their experience as a 9.125 out of 10, and 87.5% of users determined correctly that nuclear energy is the most efficient. These two data results reflect two of the main goals of our exhibit: to be interactive and to be educational. Therefore, we believe that our developed solution addressed the problem presented by the client.

Table of Contents

Abstract **2**

Table of Contents **2**

List of Figures **9**

Zeynep Ay **12**

Introduction 12

Problem Statement 12

Stakeholders 12

Pertinent topics in engineering 12

Scope 13

Background 14

Research 14

Existing Market 14

Industry Guidelines 14

Best Practices & Success 14

Exhibit Topics 15

Additional Research 15

Ethics 16

Universal Design 16

Methodology 17

Defining The Problem 17

Generate Solutions 17

Deciding Course of Action 18

Implement Solution 18

Refining/Optimizing 19

Prototype 19

Classmates Feedback 20

Implement Solution 20

Pre-Construction Planning 20

Construction 21

Coding 22

Hardware 22
Classmates Feedback 23
Further Evaluation of Solution 23
Re-Analyzing Design 23
Coding 23
Hardware 24
Aesthetics 24
Individual Contributions 25
Milestone #1 25
Milestone #2 25
Milestone #3 25
Milestone #4 25
Milestone #5 26

Zeynep Ay **76**
Discussion/Analysis 76
Results 76
Strengths 76
Weaknesses 76
Overall Review 76
Conclusion 77
Results 77
Challenges 77
Concluding Remarks 77
Recommendations 79
Intellectual Blocks 79
Regrets & what I would do different 79
Recommendations 79
Lessons Learned 80
Contributions 80
Milestone #5 80
Milestone #6 80
Resources 81
Reflections on Learning 81

Works Cited **100**

Author Biographies **102**

Appendices **104**

Appendix A – Team Contract 104

Appendix B - Decision Analysis 110

Appendix C - Final AutoCAD/Solidworks Drawings 111

Appendix D – Product Testing Results 117

Appendix E – Code Used in Project 118

GUI 132

Actively playing screen 133

Final screen 133

Appendix F – Wire Diagrams for SparkFun Boards 134

Appendix G – Photo Log 135

Appendix H – Final Gantt Chart 150

Appendix I – Final Budget 151

152

List of Figures

Fig. 1. Capacity Factor by Energy Source in 2020 15

Fig. 2. Slant Surface Angles 16

Fig. 3. Microplastic Extraction Exhibit Sketch by Lauren Ward 17, 33, 45, 58

Fig. 4. Nuclear Seawater Extraction Exhibit Sketch by Nick Gorycki 17, 33, 45, 58

Fig. 5. Regional Climate Change Exhibit Sketch by Katie Tschoepe 18, 33, 45, 58

Fig. 6. Stormwater Management Exhibit Sketch by Zeynep Ay 18, 33, 45, 58

Fig. 7. Optimized Sketch 19

Fig. 8. Cardboard Prototype – Nuclear Portion, Front 19, 35, 47, 60

Fig. 9. Cardboard Prototype – Wind Portion, Front 19, 52

Fig. 10. Cardboard Prototype Orthogonal Sketch 19, 34, 47, 60

Fig. 11. Pre-Construction Design Recommendation by Carrie Tam 20, 60

Fig. 12. Pre-Construction Design Brainstorming Sketch by Zeynep Ay 20

Fig. 13. New Exhibit SOLIDWORKS Orthogonal Sketch 20, 35, 61

Fig. 14. Wind Component AutoCAD Sketch 21, 48, 61, 65, 69

Fig. 15. Wind Energy Wheel 21, 66

Fig. 16. Solar Energy Button SOLIDWORKS 21, 70, 80

Fig. 17. Solar Energy Button 21

Fig. 18. 60% of Construction 22, 36, 49, 61

Fig. 19. Solar Energy Flowchart 22

Fig. 20. Nuclear Energy Flowchart 22

Fig. 21. Wire Diagram 23

Fig. 22. GUI Draft #1 24

Fig. 23. Wood Prototype of Exhibit with Color 24, 36, 50, 63

Fig. 24. Nuclear Energy Lever system 24, 69, 77, 83

Fig. 25. Solar and Nuclear Components AutoCAD Sketch 24, 48, 61, 65, 69

Fig. 26. First Planned Trifold Design by Katie Tschoepe 25, 62

Fig. 27. Final Trifold Design 25

Fig. 28. New Exhibit Design SOLIDWORKS Model 48, 74

Fig. 29. LED Acrylic Pieces AutoCAD Sketch 49, 92

Fig. 30. 3D-Printed Wind Component Handle 50, 62, 69

Fig. 31. Final Exhibit at the Museum of Science 51, 64, 73

Fig. 32. Wind Component Handle SOLIDWORKS Orthogonal Sketch 52, 93

Fig. 33. LED Strip and Acrylic Holder AutoCAD Sketch 52, 93

Fig. 34. Wiring of Wind Exhibit 63

Fig. 35. Painted Solar Panel on Solar Energy Exhibit Component 66

Fig. 36. Painted Sun with LEDs on Solar Energy Exhibit Component 67

Fig. 37. Final Wind Component 70

Fig. 38. Final Solar Component 71

Fig. 39. LED Solder Work 72

Fig. 40. Button Solder Work 72

Fig. 41. Solar Randomized Sun LED Code 85

Fig. 42. Nuclear Exhibit Magnetic Marble Extraction Piece 87

Fig. 43. Museum Exhibit Components inside Transport Container 90

Zeynep Ay

1.1 Introduction

Problem Statement

For this project, we aimed to create a traveling museum exhibit that teaches students ages 10-18 the global impact of sustainable efforts. This is important as some kids cannot travel to museum exhibits, and all should understand the impact of sustainability. Users need an inclusive, accessible, transportable, and interactive design. Our solution is to create an exhibit that teaches children about nuclear energy as a renewable energy source while destigmatizing its use. We also aim to teach children the difference in energy between a Gigawatt, Megawatt, and Kilowatt. The exhibit, when set up, must sit in a 36" wide by 28" deep tabletop, and it must be safe during both setup and transit. The design must include educational text concisely yet thoroughly explaining the concept, and it must automatically reset. The total cost of the exhibit should be less than $100 when finally produced and, when in transit, must fit within the provided box.

Stakeholders

Our stakeholders primarily were our clients as well as our users. Our clients, the Museum of Science Boston, requested an engaging exhibit that could be accessible to all users regardless of constraints (poor eyesight, etc.), appealing to all users (male, female, or nonbinary), taught the users a new aspect of sustainability, and was fun for all users.

The Staff of the Museum of Science, Boston showed our team examples of what makes a good, accessible museum exhibit by giving guidelines to follow, and examples from the Museum of Science itself. This was all made possible thanks to our team's Professor, Professor Kathryn Schulte-Grahame of the Northeastern University College of Engineering, who created the guidelines for this project and made this project possible.

Our primary users were children between the age of 10 – 18, although there were many users who fell outside of this age range. Many parents and adults also took a liking to the exhibit, as well as many young children between the ages of 4 – 7. Therefore, it is fair to say that our users were all visitors of the Museum of Science Boston.

Pertinent topics in engineering

The focus of the project was to teach children about sustainability. According to the UN World Commission on Environment and Development, sustainability is "development that meets the needs of the present without compromising the ability of future generations to meet their own needs." [16]. This is an especially important subject to teach children, as a sustainable future directly affects them and their lives. It is agreed upon that a sustainable future is one that allows society to sustain while also sustaining the future generation's ability to flourish. One way to achieve a sustainable future is to implement energy sources/fuels that do not produce emissions that pollute our planet and our atmosphere. Emissions of greenhouse gasses from the burning of fossil fuels are linked to climate change, which in extreme circumstances can cause our earth to become inhabitable for future generations. Energy/fuel sources that do not produce emission pollution are known as Zero Emission

Energies, which is the focus of our project. For our project, we focused on 3 different zero emission energy sources: wind, solar, and nuclear. Although our project did go over all 3 sources of energy, the main goal of the project was to focus specifically on nuclear energy.

Wind energy implements the use of wind to produce mechanical energy end electricity. The energy is produced with the use of wind turbines. The kinetic energy created with the spin of the wind turbines can be extracted and used. [16]

Solar Energy harnesses sunlight and converts into thermal or electric energy. This is done using Photovoltaics, which capture the solar energy and convert it to electricity. [17]

Nuclear energy, at its base, is the energy in the nucleus. We can extract nuclear energy by splitting these atoms in a process known as nuclear fission. Uranium is the most common element this is done with. The use of uranium enables there to be no emissions, unlike fossil fuels. [20] In recent days, nuclear energy has gotten a lot of backlashes by the media and by the public. This can be attributed to many historic nuclear plant meltdowns, such as the Chernobyl Accident of 1986. Although this may be the case, compared to Wind and Solar energy, nuclear energy is far more efficient than either. Regardless of the controversy, many countries still use nuclear energy with little to no meltdowns, most notably France. A major goal of our project was to destigmatize the negative connotation the public and the media have towards nuclear energy.

Scope

This technical report spans all aspects of the Engineering Design Process used to complete our project, and will display all relevant designs created in SolidWorks, AutoCAD, TinkerCAD, Matlab, Arduino, and Matlab App Designer. The budget for our project was limited to $100 USD. Before spending any money, our group had access to 4 spark fun kits which provided us with most of the necessary electrical components. These were not accounted for in our budget. We began buying necessary materials (acrylic, wood, hinges, nails, etc), and slowly progressed to using the remainder of the budget on smaller utilities (magnets, other electrical components, etc.).

1.2 Background

Before beginning our project, our team explored all the necessary elements which must be implemented into our project to ensure an accurate and accessible museum exhibit. These elements can be divided into 3 categories: Research, Ethics, and Universal Design.

- **Research**

Our team's 1st milestone involved researching 3 topics: The Existing Market of Museum Exhibits, The Industry

Guidelines of Museum Exhibits, The Best Practices of Museum Exhibits, and possible Exhibit Topics. These topics were researched independently and then discussed within our group.

Existing Market

To properly build a museum exhibit, first our group must investigate the general market of museum exhibits. This enabled us to get inspiration for our own museum exhibit, as well as what we should pay attention to implementing before our final design. This investigation was conducted by conducting research via the Northeastern Library Online Database(s), as well as visiting/touring the Museum of Science, Boston. Our research found that Museums today are moving towards being accessible and engaging to everyone. For those who are handicapped, some museums have an app where one can plan a route before they arrive which includes elevators, areas with different lighting, audio guides, and more to make their experience as enjoyable as possible. [9] Another represented group are those who are blind as museums are working with technology to create 3D printed models of exhibits and are providing small, guided tours so they can experience the museum in their own way. [18]. There is also a focus in some museums for exhibits to be more engaging for girls in STEM or children interested in learning something new. Since females visit science-based museums less frequently than their male counterparts, some museums have begun to adjust their exhibits to appeal to female visitors. This can be done by creating a low-pressure setting, representing females and their interests (i.e. characters in movies that are more popular with women), open-ended exhibits with multiple outcomes, etc. All these guidelines can be compiled into what is known as EDGE design [19].

Industry Guidelines

To make a proper museum exhibit, another element our group had to keep in mind was the guidelines for the museum exhibit industry. In the current industry, interactive museum exhibits have become a standard, and as a result many scientific institutions have created guidelines for effective exhibit creation, considering all aspects of design. Outlining the most important aspects of accessibility and effectiveness, these guidelines provide in-depth insight into the best practices in design ranging from text formatting to exhibit dimensions. Using all these resources, the creation of our exhibit provided a universally effective experience for the audience. [2]

Best Practices & Success

To make a successful museum exhibit, our group must first observe what makes other museums successful and what the overall best practices are. Our research indicated that modern science museum exhibits are becoming more project and game-based, which have been more successful in teaching children's new skills. In project-based learning, students solve real-world problems, reinforcing the idea that they can solve and address larger issues with a diverse group of experiences and ideas. [9] In children's science exhibits, new focus is drawn towards signs that ask children questions throughout the exhibit to strengthen the development of their scientific reasoning. A successful museum exhibit promoting sustainability will reinforce the audience's problem-solving skills by allowing them to address real-world issues in the field. [8].

Exhibit Topics

In a time where sustainability is constantly adapting and changing, there are a variety of practices and systems that are slowly on the rise and being pushed to be

implemented in everyday life. It is our job, as the producers of this museum exhibit, to choose topics that will teach the children something new, without the subject being too complicated or too simple. As a result, our team decided to research some possible exhibit topics that were popular at other museum exhibits before diving into idea generation. This way, we as a team could familiarize ourselves with some topics that were appropriate for our intended age group. One topic is the implementation of stormwater management systems. When it rains, the water that goes down our drains collects many pollutants before going down sewage drains. This water is also known as runoff water, and can carry with it liquid fluid excess, and other harmful chemicals. Because the U.S. does not (in most states) have a proper stormwater management plan or system, most of this polluted water eventually ends up in our drinking water. Through these systems, the toxic chemicals that end up in public drains due to stormwater can be filtered out. [12] Another practice is upcycling plastic bottles into "eco-bricks" to reduce plastic pollution. Only 12% of our plastic water bottles are recycled. Due to the fact recycling has become an ineffective way to reduce waste, upcycling has become wildly popular in recent years. A popular form of upcycling that can be applied to a variety of projects is using old plastic water bottles to create bricks that can be used in industry. [15] And lastly, a newer form of sustainable energy is the waste-to-energy system, which takes (combustible) waste and turns it into energy through heating up the waste and using its steam to create energy. Discovering these topics enabled us to understand what museums want to teach children about sustainable energy, and the capacity to learn for our intended age group.

Additional Research

Once our team had decided to work with Zero emission energy as our exhibit's topic, our team researched what the exact differences were in efficiency between Nuclear, Wind, and Solar energy (Fig. 1).

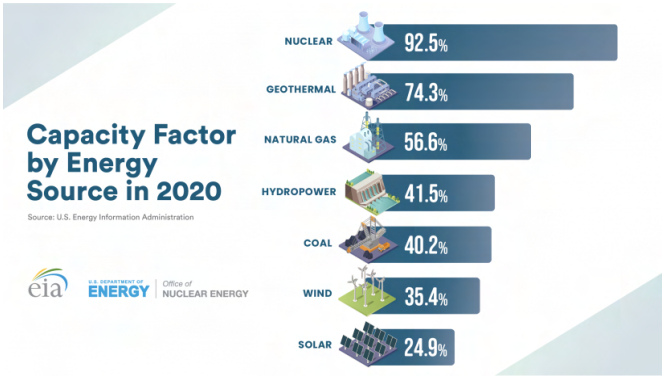

Fig. 1. Capacity Factor by Energy Source in 2020. [20]

Our team found that for nuclear, 0.024 GigaWatts (GWh) of energy (in the form of fuel) can be produced per 1g of uranium. In contrast, 0.000402 GWh of energy can be produced for one wind turbine in an hour, and 0.000004 GWh for one solar panel in the sunlight for an hour. As a result, nuclear energy was found to be the most efficient energy source, wind being the second most efficient, and solar being the least efficient.

Ethics

As engineers, we use science and technology to solve problems with the overall goal to benefit our society. As a result, our group aimed to display an issue that requires both science and technology and is related to sustainability. The topic for our museum exhibit, zero emission energy, uses both science and technology to find alternative sustainable energy sources to combat climate change and limit emission pollution. Beyond this, air pollution can also be extremely toxic to one's health. Many

studies show that long-term effects of air pollution include heart disease, lung cancer, and respiratory diseases such as emphysema. Air pollution can also cause long-term damage to people's nerves, brain, kidneys, liver, and other organs [16]. This is an especially important topic to teach children, as emission pollution and climate change will have significant implications on their lives if more sustainable energy sources are not implemented. Therefore, zero emission energy sources benefit not only current day society, but also benefit our future.

Universal Design

To ensure that all museum visitors could interact with our exhibit, our team followed the Museum of Sciences universal design plan and implemented some elements. The Universal design plan emphasizes on the ability for visitors to physically interact with/perceive the space, cognitively engage with the materials, and socially interact with one another. For example, the Museum of Science, Boston recommends the following angles for various applications (Fig. 2):

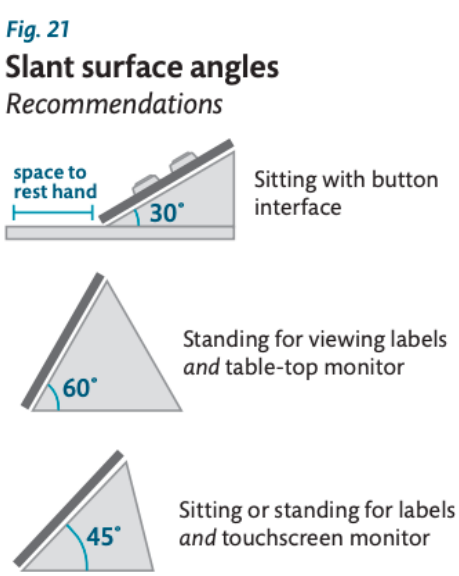

Fig. 2. Slant Surface Angles. [21]

These recommended angles were incorporated into our own museum exhibit. Universal design also encompasses EDGE design to appeal to female museum visitors just as much as male museum visitors.

1.3 Methodology

The engineering design process has 5 steps: Defining the problem, generating solutions, deciding course of action, implementing the solution, and evaluating the solution. These were the steps our team followed while working on our museum exhibit.

Defining The Problem

To define the problem at hand, first our team had to question who our stakeholders were. As mentioned beforehand, our clients for the product were the Museum of Science, Boston and our clients for the final report was our Professor, Kathryn Schulte-Grahame and her future students. Our users would be children between the ages of 10 – 18. We as a team also made sure to write our problem statement by addressing the real problem at hand. This was done by focusing on objectives/constraints, not a

misdirected search. Our objectives were to make an informative museum exhibit for children that teaches a topic of sustainability, our constraint was our budget, the size of our bin, time, and transportability. We also made sure to answer the 3 W's: What is the issue, who has the problem/need, and why is the issue worth anyone's attention. To answer these questions, we found the issue to be the bad stigma surrounding nuclear energy as well as the excess air pollution created by some forms of energy (I.e., fossil fuels), the people who have the problem or need is all of us as a society (specifically future generation as they will have to deal with the consequences of climate change), and the issue is worth attention since it will affect our future generations and possibly make this planet inhabitable.

Generate Solutions

For Milestone 2, our team had to generate some possible museum exhibit topics. Our team used the gallery method to generate different solutions. When generating different solutions, I personally made sure to keep in mind perception blocks, unnecessarily limiting the problem, intellectual blocks, and expressive blocks. Our time limit was 2 days, and we met as a team to display our ideas and to discuss/critique each idea independently. Firstly, we discussed and critiqued Lauren Ward's idea, which had to do with microplastics (Fig. 3):

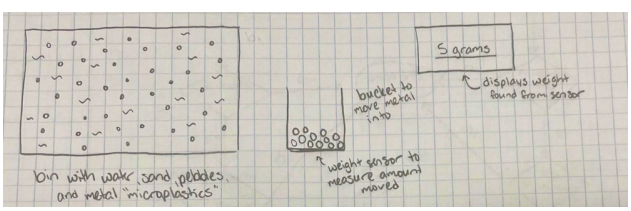

Fig. 3. Microplastic Extraction Exhibit Sketch by Lauren Ward

Secondly, we discussed Nicholas Gorycki's idea, which had to do with Nuclear Seawater Extraction (Fig. 4.

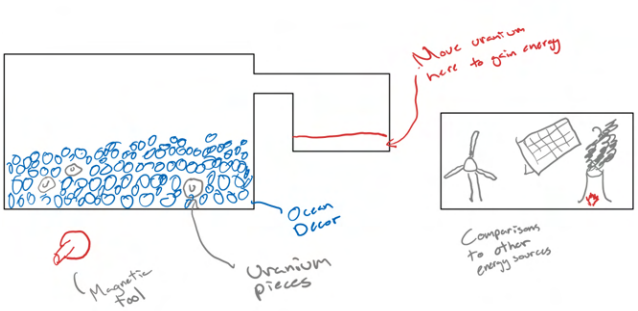

Fig. 4. Nuclear Seawater Extraction Exhibit Sketch by Nick Gorycki

Thirdly, we discussed Kathleen Tschoepe's idea, which had to do with the effects of climate change to each region of the U.S (Fig. 5).

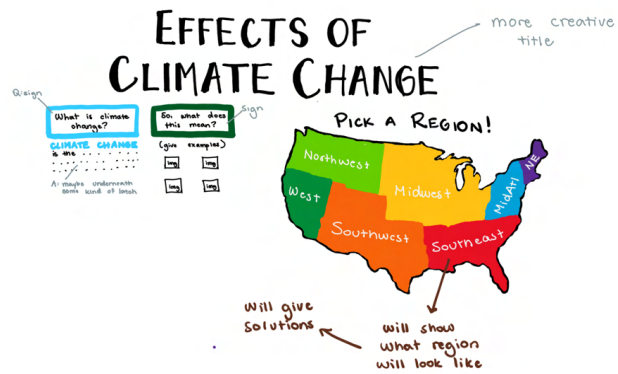

Fig. 5. Regional Climate Change Exhibit Sketch by Katie Tschoepe

Lastly, we discussed my idea, which had to do with Stormwater Treatment with the goal of teaching children the importance of managing stormwater (Fig. 6):

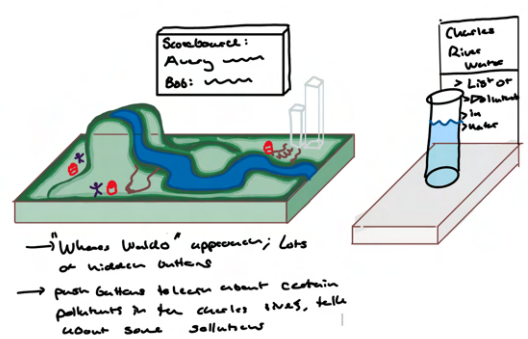

Fig. 6. Stormwater Management Exhibit Sketch by Zeynep Ay

This was done by incorporating hidden buttons that highlighted various pollutants to the Charles River. The

more buttons that were found, the higher the child's score. The open-endedness of the design would ensure that children could also work in teams to find the buttons, while also learning about the importance of stormwater management. To the right of the exhibit, there would also be a glass of water from the Charles River, as well as a breakdown of the individual pollutants. Some of the interactive elements of this design were implemented further into the final design, specifically the loosely multiplayer aspect.

Deciding Course of Action

For Milestone 2, our team also had to decide on the best idea and the idea our team would pursue. To be able to decide on which idea would be the best moving forward, our group made a Kepner-Tregoe Diagram. Eventually, we decided to proceed with Gorycki's idea due to the fact it was the most transportable, most educational, and most interactive. It also was a subject that was not too complex for children to understand since most were, at least to some degree, familiar with nuclear energy, but wasn't too simple since it added the additional element of seawater extraction. This, however, was not our final idea since our idea was further modified throughout the project. Once our team had completed the Kepner-Tregoe diagram, we met with our mentor, Carrie Tam, and worked through the Kepner Tregoe diagram with her. She agreed that the Seawater Extraction exhibit would be the most suitable and favorable course of action.

Implement Solution

For Milestone 3 our team had to implement our solution. This was done by refining and optimizing our solution, and then creating a prototype out of cardboard. These prototypes were then displayed to the rest of the class and received critiques and recommendations from the rest of our classmates and our professor.

Refining/Optimizing

Before executing Gorycki's original sketch, our team first had to refine and optimize the idea (Fig. 7), specifically to make sure the museum exhibit could be reset. This was done by implementing a spinning turbine at the bottom of the case which could shuffle the marbles and had a function where the dropped marbles could be returned to inside the gravel area. For the wind turbine section, our team also decided it would be best to implement a wheel design that could be spun to simulate the production of wind energy.

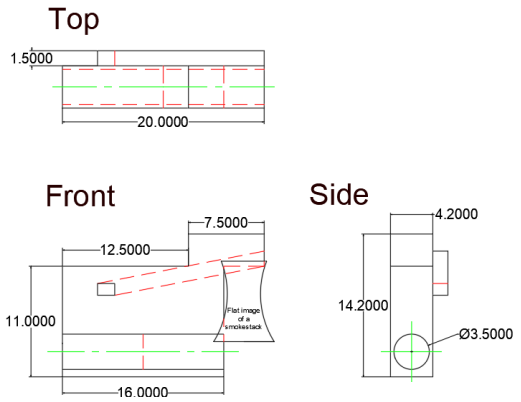

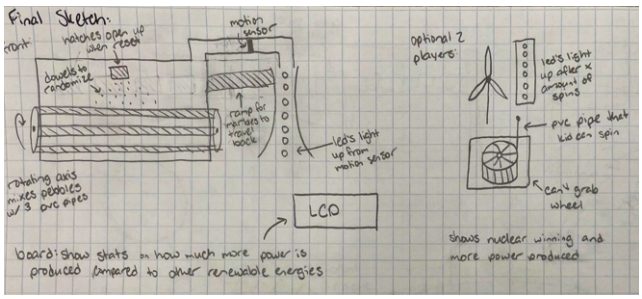

Fig. 7. Optimized Sketch

Prototype

Our team's prototype was constructed with cardboard (Figs. 8-10) and had some major functions working, such as the reset ability and the resetting turbine. This was the first embodiment of the design and was held as a reference as we moved forward in the project. The prototype enabled us to understand if the final design was executable, as well as functional. Once our cardboard prototype was complete, it was presented to our professor alongside our Cornerstone classmates for critiques and recommendations. My personal contribution was the construction of the prototype and optimizing the sketch with my teammates.

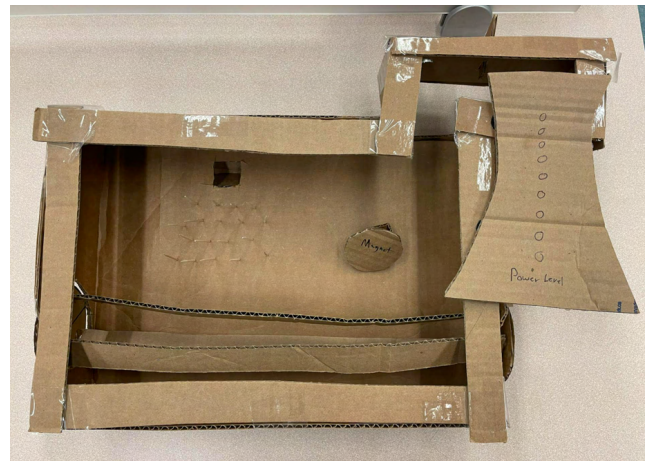

Fig. 8. Cardboard Prototype – Nuclear Portion, Front.

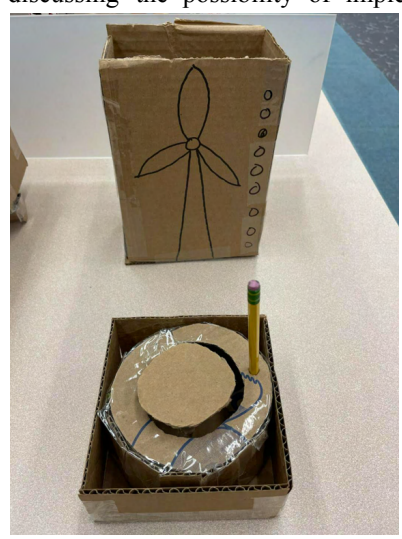

Fig. 9. Cardboard Prototype – Wind Portion, Front.

Fig. 10. Cardboard Prototype's Orthogonal Sketch

Classmates Feedback

After presenting our prototype to the rest of our classmates, the consensus was positive, however there were some notable critiques. One critique was from a classmate of ours who encouraged us to implement a theme. A theme was not implemented into our exhibit until much later in the process, however this comment did have our team discussing the possibility of implementing a theme. Another notable comment was from our professor, who emphasized that our wind and nuclear portions felt like two separate exhibits. We kept this comment heavily in mind for the next milestone.

Implement Solution

For our final step in the Engineering Design Process our team was challenged to implement our solution. In Milestone 4, this was done by completing 60% of the necessary construction of our exhibit, alongside a large majority of the coding and hardware. This was the milestone where I was the project manager, and my

contributions largely included doing the hardware, coding, and proof of concept, as well as presenting our exhibit to the class.

Pre-Construction Planning

Based on the comments we had received from our Classmates and professor the following week; our team decided to revisit our sketch and adjust it according to the comments we received (Figs. 11-13). After meeting with our mentor Carrie Tam, we decided to take out the seawater extraction element of the nuclear energy portion and decided to add in solar energy as a third form of zero emission energy per her recommendation. We also decided to add in a 45-degree slant to the exhibit [2] as recommended by the Museum of Science, Boston.

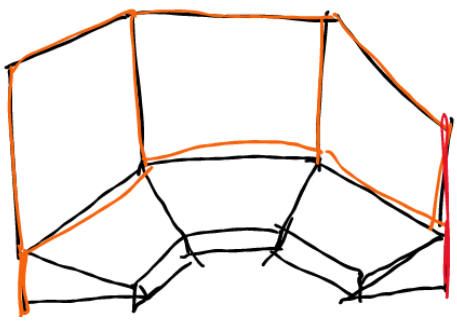

Fig. 11. Pre-Construction Design Recommendation by Carrie Tam

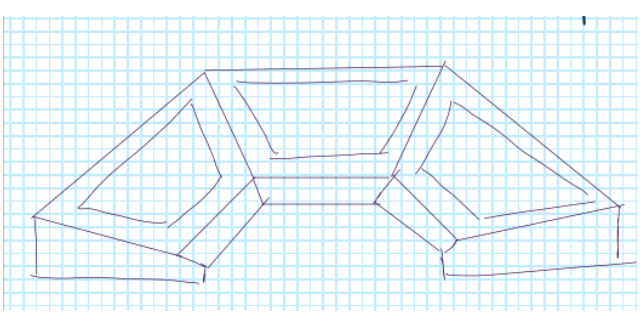

Fig. 12. Pre-Construction Design Brainstorming Sketch by Zeynep Ay

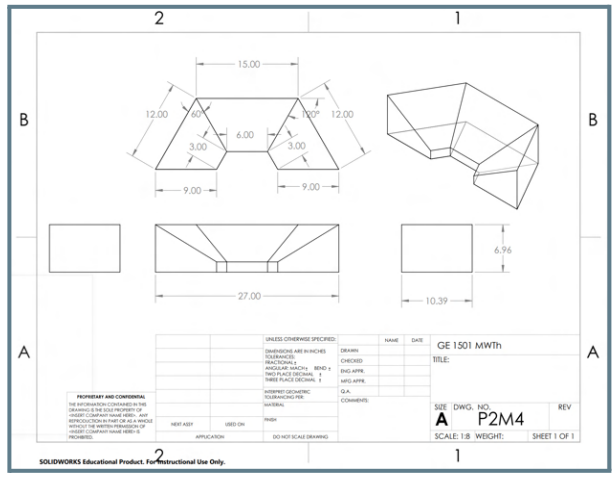

Fig. 13. Pre-Construction SolidWORKs Model

Construction

Our milestone required us to have 60% of the physical exhibit constructed (Fig. 18). This was done by making most of the base of the exhibit and some of the interactive pieces, alongside some decorative pieces. The interactive pieces included the wind energy wheel (Figs. 14-15) and the solar energy button.

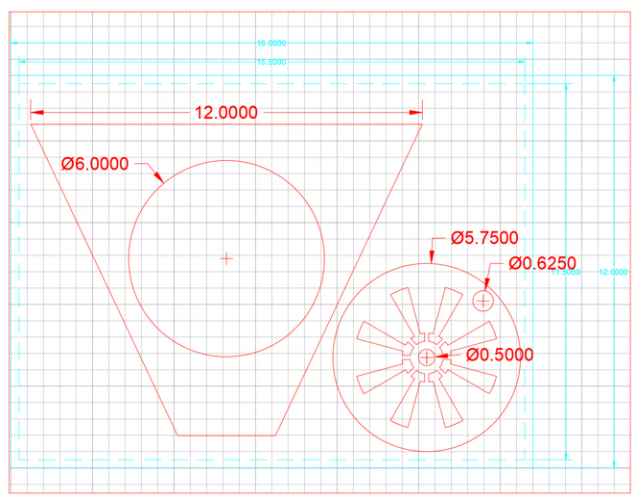

Fig. 14. Wind Component AutoCAD Sketch

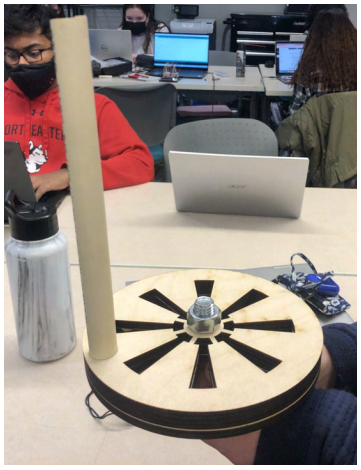

Fig. 15. Wind Energy Wheel

For this milestone, each team member had to 3-D print a piece that would be useful to the exhibit. These prints were done through the First Year Engineering Center (FYELIC) at Northeastern University. My personal 3-D printed piece was the solar energy button (Figs. 16-17), which was later reprinted with a different design, size, and color to better fit the exhibit. Katie's 3-D printed piece was the knob for the wind energy portion of the exhibit, Nick 3-D printed the magnet holder for the nuclear portion of the exhibit, and Lauren 3-D printed a LCD screen border.

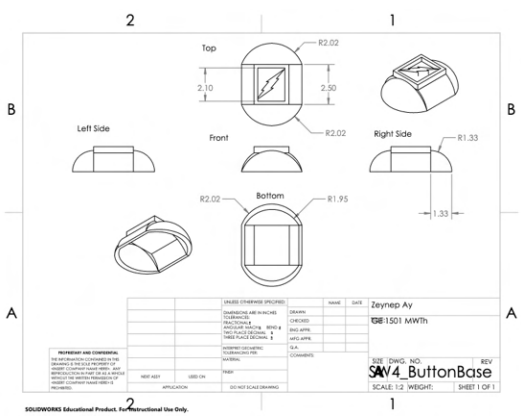

Fig. 16. Solar Energy Button SolidWORKS

Fig. 17. Solar Energy Button

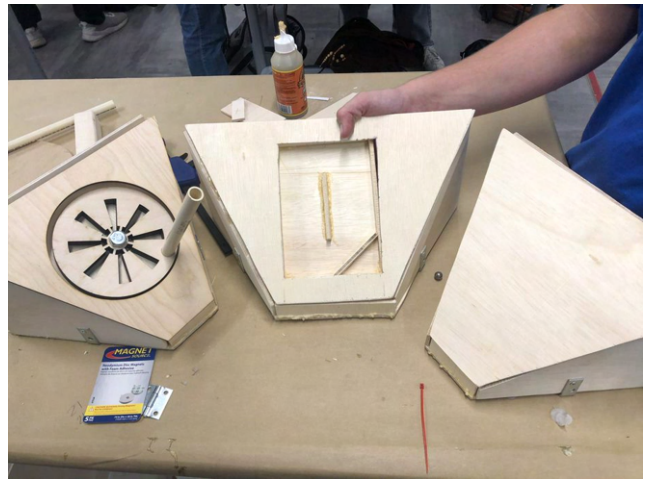

Fig. 18. 60% of Construction

Coding

I was heavily involved with the coding portion of the exhibit. First, our team met and discussed what exactly we wanted the user experience to be in the exhibit, and we all agreed that the overall experience should be game based, with still a heavy educational aspect. We decided that it

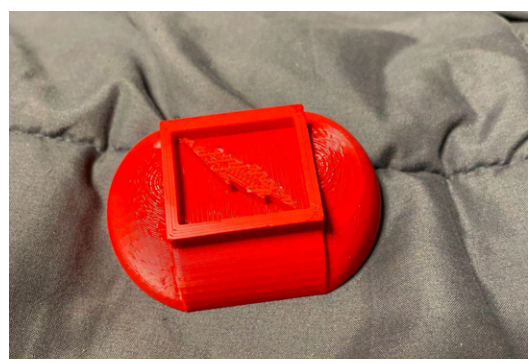

would be best to have the user first interact with the nuclear portion of the exhibit (Fig. 20), then the wind portion of the exhibit, and then the solar portion of the exhibit (Fig. 19). As the user runs through each section, the amount of energy produced would be displayed. Since the

amount of energy produced with nuclear would be substantially higher than the amount of energy produced by the wind and solar portions of the exhibit, this would convey to the user that nuclear is far more efficient while also destigmatizing the notion towards nuclear energy. The first original code was first written in Arduino.

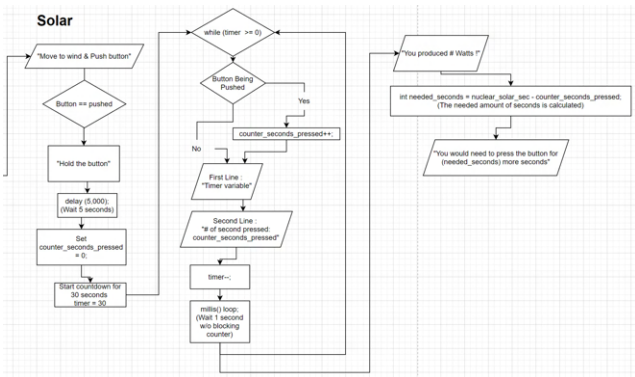

Fig. 19. Solar Energy Flowchart

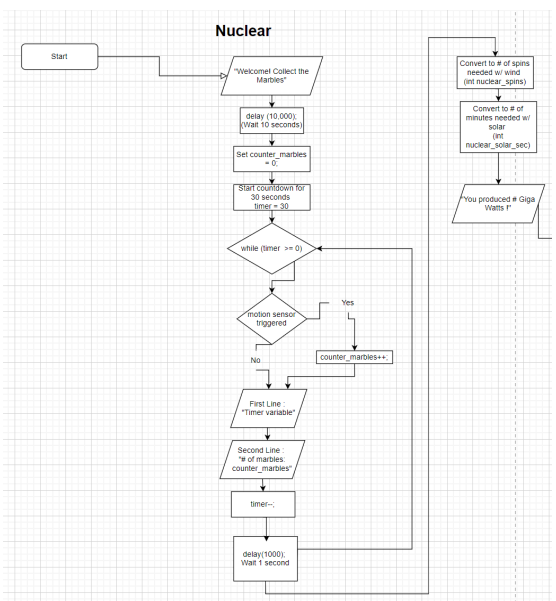

Fig. 20. Nuclear Energy Flowchart

Hardware

The hardware portion of the exhibit follows the wire diagram (Fig. 21) and includes a hall effect sensor (a sensor that detects magnets), an ultrasonic distance sensor, an LCD screen, and a pushbutton.

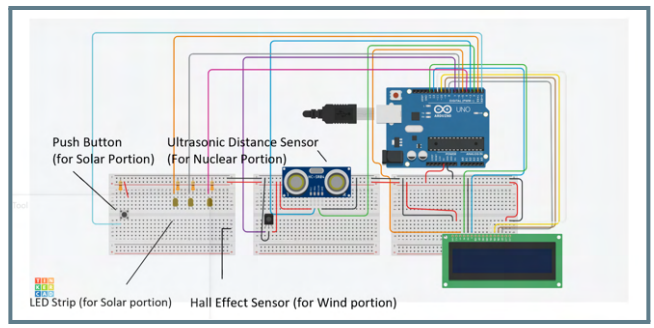

Fig. 21. Wire Diagram

The hardware was tested with the code and was found to be working as intended. The proof of concept was then recorded and published onto YouTube at https://www.youtube.com/watch?v=g2WSbcnKPYo .

Classmates Feedback

After presenting our new design, 60% complete physical body and proof of concept to our classmates, the consensus was positive, however there were some notable critiques. Once again, a classmate encouraged us to implement a theme. Another notable comment was from our professor, who felt as though our game lacked a goal. We kept this comment heavily in mind for the next milestone.

Further Evaluation of Solution

For Milestone 5, our team had to complete the museum exhibit to be 90% complete (Fig. 24). This included re-analyzing the design, soldering the hardware, and

adapting the code. Milestone 6 included finalizing the GUI, finishing aesthetics, and creating the posterboard.

Re-Analyzing Design

Before continuing to work on the exhibit to 90% completion, our team met with our mentor, Carrie Tam, to discuss what we should adapt. Based on the feedback received from our classmates and professor, as well as advice from our mentor, we decided to make it so all components could be interacted with simultaneously with the goal of creating enough energy to power the city of Boston, Massachusetts. This was done by lighting up familiar landmarks in the Boston area with LED strips once the children had reached a certain energy threshold. The easiest threshold to achieve was Northeastern University, then Fenway, followed by Northend , Cambridge, and finally Boston. Since the fastest way to light up all the way to Boston is to use the nuclear energy portion of the exhibit, the hope is that the users will identify nuclear energy as being the most efficient energy source.

Coding

The original Arduino code was rewritten into Matlab to perform the same functionality, but this time with the program constantly running rather than it running synchronously. Eventually, it was further edited into a Game User Interface (GUI) with MatLab App Designer. This first GUI was my contribution to the group (Fig. 23). This made us discard the LCD screen from our design.

Fig. 22. GUI Draft #1

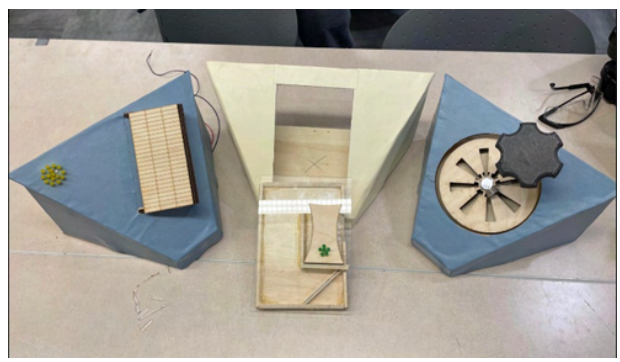

Fig. 23. Wood Prototype of Exhibit with Color

Hardware

For Milestones 5 and 6, the hardware was soldered so that each individual piece could have more range to where it was being placed. The LED strips were also soldered to be able to do the same thing. There were major complications with the metal marbles in the nuclear portion of the exhibit however, as the distance sensor was intended to count the marbles as they fell. After much speculation, we realized that the signal sent out by the distance sensor was being interrupted due to the circular shape of the metal marble. This made it necessary for us to implement a lever system to count the marbles (Fig. 24).

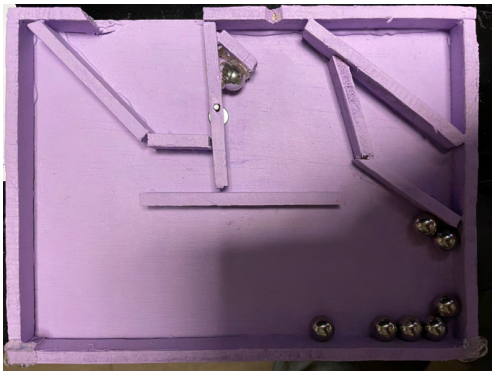

Fig. 24. Nuclear Energy Lever system

Aesthetics

The last element my team and I focused on was the aesthetics of our museum exhibit. This was done by completing the painting, laser cutting the acrylic pieces of the different locations (Fig. 25), and completing the posterboard (Figs. 26-27).

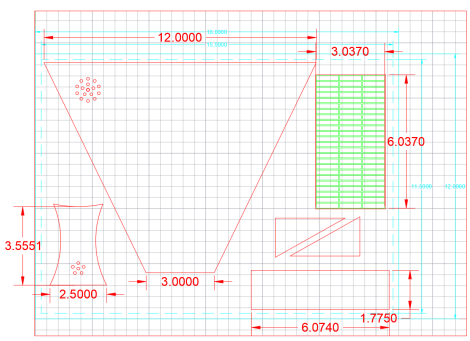

Fig. 25 Solar and Nuclear Components AutoCAD Sketch.

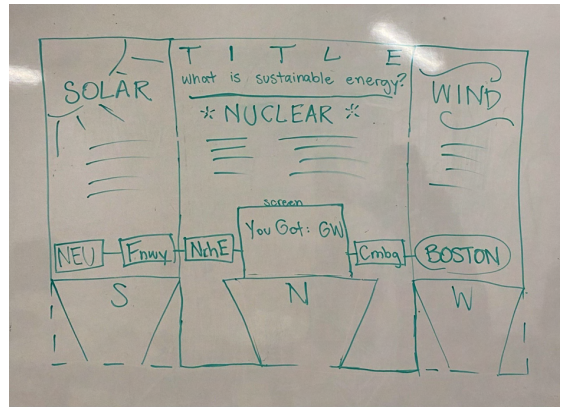

Fig. 26. First Planned Trifold Design by Katie Tschoepe

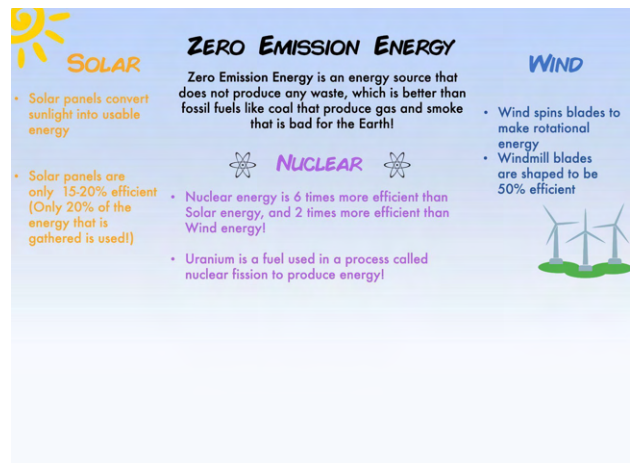

Fig. 27. Final Trifold Design

Once this was all finalized, we presented our exhibit first to the students at our university, then at the museum of science!

Individual Contributions

To summarize my contributions, I have broken down the work I have done as it relates to each milestone. Some of the more informative portions of my work are further explained in each step of the Engineering Design Process.

Milestone #1

For Milestone 1, my job was to do the research on popular and upcoming Museum Exhibit Themes that related to the category of sustainability. This was so our team could have some inspiration for what made a good Museum Exhibit Theme, and would invoke some ideas during the next Milestone where we did some idea generation.

Milestone #2

For Milestone 2, my job was to research into a specific subject Which is a part of our idea generation process. My personal idea and which ones and Stormwater management in the city. I had read some articles that were sponsored by Districts in the state of Massachusetts which encouraged the Massachusetts government to manage our stormwater more efficiently. I had also noticed in my research 4 miles down number one that Stormwater management was a fairly popular museum exhibit topic, but was not a topic that was highly popular, for example recycling.

Milestone #3

My contributions to milestone 30 included as well as finalizing the last sketch for our prototype. This was done as a team in FYELIC.

Milestone #4

for milestone 4, I was assigned to be the project manager. This was an especially heavy milestone as our group had to complete 60% of the construction alongside most of the hardware and code. I encouraged my group to start working on the milestone as soon as possible due to the limited time we had to complete the milestone. Lauren Katie and Nick worked on the construction while I worked on a fair amount of the hardware and the code. The code was originally written in Arduino following an synchronous format, which was later changed. The wire diagram, code, and the proof of concept video were all my contributions to the milestone. Additionally, our team had completely reformatted our exhibit, which made my presentation to the class fairly complex and difficult.

Milestone #5

For milestone 5, my contributions included adapting the code, aiding with construction, and working on the hardware. My teammates and I had decided it would be a good idea to make the code so that rather than the code running synchronously, the code would run all 3 portions of the exhibit at the same time. We also decided we wanted some on-screen displays, so I decided to rewrite the Arduino code into MatLab. The process of converting the code and reformatting the actual structure of the code was a long journey, but eventually I got the code to function in MatLab. Once this was done, a Red Vest at FYELIC recommended we use MatLab App designer to give the whole thing a more game-like design. MatLab app designer was not something I was familiar with, so I did some research on how to use it, and created our basic GUI design. Once this was all complete, I helped with some aspects of the construction for the exhibit, aided slightly in soldering, and tested the hardware with the code, adjusting the code as necessary.

Milestone #6

For Milestone 6, my contributions included finalizing the poster board, printing the poster board, cutting out decorative pieces, implementing our new theme onto our exhibit and the GUI, and assisting in assembl

1.4 FINAL DESIGN

In our museum exhibit design, we have children create power through wind, solar, and nuclear energy to be able to light up all of Boston. To do so, we made three separate boxes that each represent a renewable energy source. For the solar section, while the LEDs in the sun are lit up, the user can press and hold a button to collect solar energy. This educates the user on the actual functionality of solar energy and how solar panels can only capture energy when the sun is shining. For the nuclear section, the user moves marbles, which represent uranium rods, into a nuclear tower to generate power. This emulates the use of uranium in these factories and displays a simplified process that the user can easily grasp and understand. For the wind section, the user is able to spin a wheel with a windmill design, which emulates the rotational energy that wind turbines create as air moves past. All of these sections cooperated to provide an overall lesson on how effective these methods of generating energy are when compared to each other. As the user generated energy, the locations on the board would light up, providing the user with a goal, and driving the user to analyze the performances of the different methods as they try again to reach a higher goal.

NUCLEAR ENERGY

The nuclear energy exhibit is a trapezoidal box that fits into a 15” by 9” rectangle. Inside, yet flush to the top of the box, was a 6” by 8” rectangular box with a piece of clear plastic acrylic attached to its top. On top of the acrylic, is a laser-printed nuclear tower with dimensions of 3.5551” by 2.5” with 6 LEDs (Fig. 25) that light up when the user moves a marble into the tower. The LEDs were soldered onto the backside of the nuclear tower using copper tape. Below the tower, is a 2.5” by 2” box to cover a ramp built to allow the marbles to roll back for the user to magnetize again. Inside this rectangular box are 9 marbles for the user to magnetize as well as small rectangular wood pieces that create a path to the top of the nuclear tower. Once the marble is released, it rolls through a simple seesaw structure (Fig. 24), which activates a motion sensor on the side of the box.

Fig. 24. Nuclear Marble Box Lever

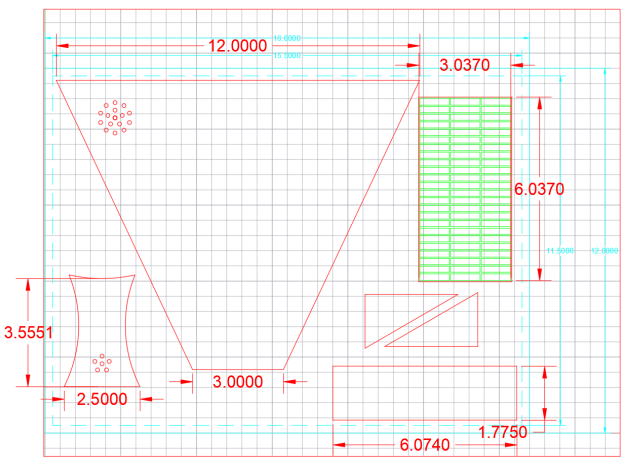

Fig. 25. Nuclear and Solar Components AutoCAD Sketch

Wind Energy

The wind energy exhibit is a trapezoidal box that contains a ¾" thick wheel with a 6" diameter (Fig. 14). The wheel has spokes and a center, and it was laser cut from wood purchased at the Northeastern University bookstore. The wheel was connected with a nut and a bolt to a wood base housed within the box, angled at 45° to be parallel to the outer surface of the box. There was a hole in the outer edge of the wheel through which a PVC pipe was placed to spin it.

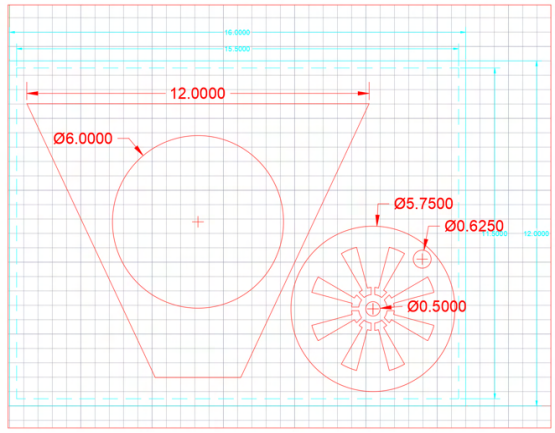

Fig. 14. Wind Component AutoCAD Sketch

To make spinning the wheel easier, we 3D-printed a black knob (Fig. 30), attached a ball bearing, and connected it to the top of the PVC pipe.

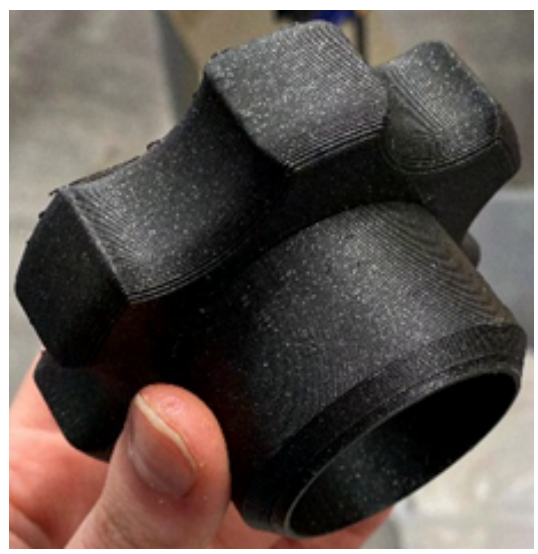

Fig. 30. 3D-Printed Wind Component Handle

In order to count the number of times the users spun the wheel, we placed eight small magnets on the circumference of the wheel and a Hall Effect sensor within the box so that every time the wheel was spun, the sensor detected the magnets approaching it. Finally, we painted the box light blue, the wheel and PVC pipe silver, and glued a printed image of Moby skydiving on the side of the box that faces the viewer (Fig. 37).

Fig. 37. Final Wind Component

Solar Energy

The solar energy exhibit is a trapezoidal box that would fit inside of a 5” by 9” rectangle. The exhibit consisted of a button that was created with a 3D printer (Fig. 16) along with 5 LEDs in a sun formation and a laser cut solar panel model (Fig. 25). These three components sat on the top of the box that was angled at 45 degrees. The button was a 3D printed piece that was placed over a sparkfun button and filled with pieces of a kitchen sponge that created an elasticity between the button cover and the box (Fig. 3). The LEDs were soldered together using copper tape on the inside of the box and then coded to randomly light up and turn off. While both the light was on and the button was pressed, the code would register the user gaining solar energy. Our final solar exhibit component can be viewed below (Fig. 38).

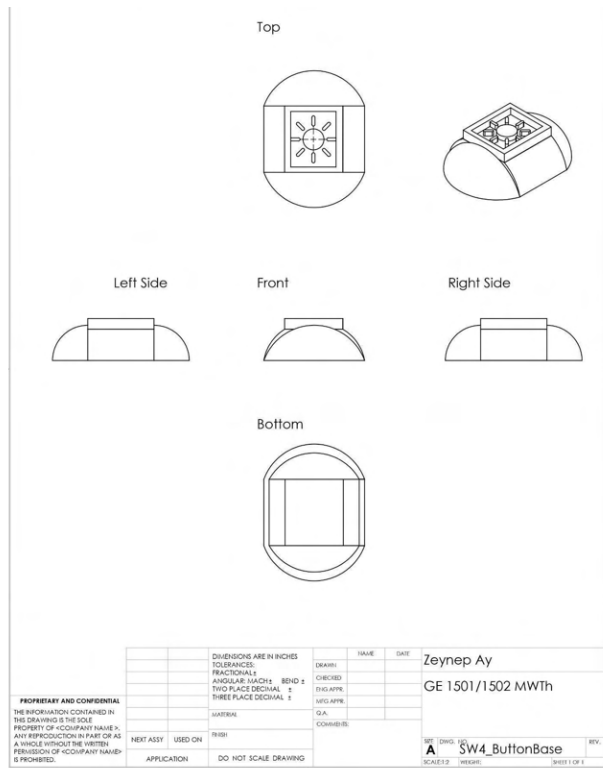

Fig. 16. SOLIDWORKS Button Sketch

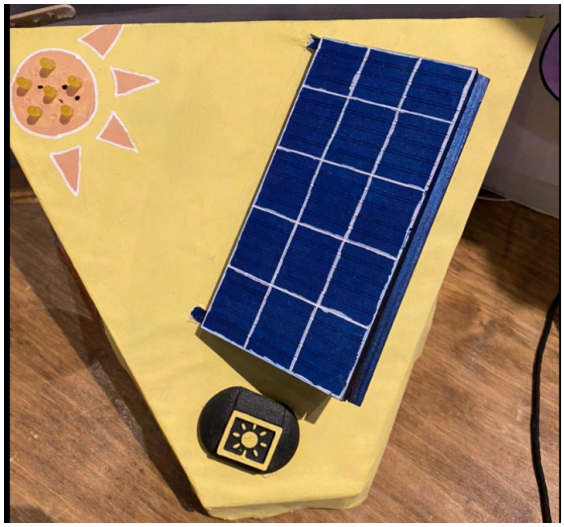

Fig. 38. Final Solar Component

Code and GUI

The first visual cue that the GUI provides is a screen with a start button. This can be viewed in the GUI section of Appendix E Once it is pressed the user receives a few instructions that are as follows:

1) You have 1 minute to make as much power as possible. Can you power all of Boston?
2) The buildings on the board will light up as you make energy!
3) For wind, use the handle to spin the turbine and generate power!
4) For Nuclear, use the green handle to move the uranium marbles into the factory to power it!
5) For Solar, press and hold the button while the sun is shining to capture energy!

Then the user is prompted with a countdown before the game begins. In this time, all of the necessary initializations will occur including the distance sensor and the RedBoard itself. After the countdown finishes, the code enters a for loop that runs for a minute using the calculated time that was necessary to run through the code once. The first act inside this loop is reading the distance from the ultrasonic sensor. The code then uses this value to determine if a marble has been detected, and that in the last run through the loop, a marble was not detected. This ensures that one marble does not cause the code to count two marbles collected. If these conditions are satisfied, the code adds a marble to the counter and sets a counter for the nuclear tower light that turns it on and keeps it on for 6 cycles (1.2 seconds). It then reads in the distance again to be referenced in the next run through. The code then moves on to reading the hall sensor in a similar fashion. If a magnet is detected, and was not detected in the last run through, then the counter for spins is raised. Next, the solar exhibit has a random number between 2 and 7 for how many seconds the sunlight stays on or off. There is a counter that switches between on and off every time the miniature timer runs out. This timer is reset with the random number and proceeds to count down with a line that depreciates it every run through. The code then checks if the button is pushed, and if both the button is pushed and the sunlight is on, then the counter for seconds is increased by 0.2. The last thing the code does inside this loop is update the timer visual on the GUI and display the current energy values on the meters present on the GUI. It also checks the thresholds for the LED strips and lights up the locations on the board respective to their energy thresholds. Everytime one is lit up, a Moby beep sound is played as well. This visual can be seen in the GUI section of Appendix E. After the timer runs out, this loop is terminated and a new visual shows up on the GUI. The code calculates and displays the percentages that each

source provided to the total energy along with the total energy. The final GUI screen (seen in GUI section of appendix E) prompts the user to think about their results and stays on for 15 seconds before returning to the start screen. From there, this process repeats when the start button is pushed.

Wiring

The wiring for this project required 2 groups of 5 LEDs, a button, a motion sensor, a hall sensor, and 5 LED strips to be wired. To make all three exhibits work off of one redboard, we placed one breadboard in each of the three exhibits. This allowed required electronic components to stay wired in transportation. The three components were connected with wires that ran from the two side breadboards to either the center breadboard or the SparkFun RedBoard itself.

For the groups of LEDs, copper tape was utilized to create two singular points for all of the positive and ground pins to conjoin without interfering with each other (Fig. 39.)

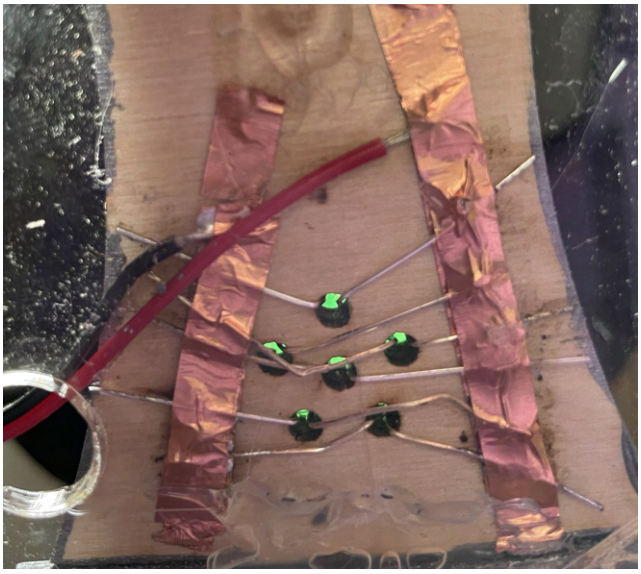

Fig. 39. LED Solder Work

For the button, wires were soldered for power, ground, and the sensor pin to a sparkfun button with a resistor in series. From there the button was placed beneath the 3D-printed component. The backside of the button can be viewed below in figure 40.

Fig. 40. Button Solder Work

For the motion sensor, four male-to-female wires were connected to the four pins. The outer two pins on the sensor were power and ground and the inner two pins were trig and echo. The outer pins ran to the breadboard, while the inner pins were connected to the RedBoard. This allowed the code to read in distance values.

For the hall sensor, three of the same male-to-female wires were used to connect the sensor to the breadboard placed inside of the wind component. Two of the wires ran to power and gourd while the third ran to a sensor pin on the RedBoar when fully wired.

For the five LED strips that were used to backlight the

acrylic, two wires were soldered to the positive and negative. The positive ran to an output pin on the

RedBoard while the ground ran to any available ground on the breadboards.

The wire diagram for all of these components working together can be seen in Appendix F.

Poster

We divided our tri-fold poster into three sections to highlight each component of our exhibit: on the left, solar; the middle, nuclear; the right, wind. Each section had a corresponding title and two bullet points defining the type of energy and explaining how efficient it is as a percentage. At the top of the middle section, we had the title of our exhibit, Zero Emission Energy, and defined it. We included images of a sun, an electron cloud, and a windmill to correspond with each section.

Fig. 31. Final Exhibit at the Museum of Science

Additionally, we placed images of Annie, Tim, and Moby to convey the theme of our exhibit. Lastly, at the bottom of the tri-fold, above the exhibit boxes. We had five laser cut acrylic pieces stuck in small, rectangular wood boxes containing LED strips that lit up as the user produced power using the exhibit games. The acrylic pieces, from left to right, consisted of Northeastern University, Fenway Park, a building in the North End, Harvard University's Annenberg Hall in Cambridge, and the Boston skyline. The full exhibit, including the tri-fold poster can be seen above (Fig. 31).

1.5 Results

Performance

During our exhibit presentations, the marbles within the nuclear exhibit performed as expected, with one incredibly magnetic marble, while the rest worked when the former marble got stuck. The LEDs on the nuclear tower lit up when the marble was dropped by the user. For the solar component, the LEDs turned on and off randomly, and the button read when the button was pressed and the light was lit. When the users spun the wheel on the wind component, it calculated all of the spins correctly; however, we needed to hold down the base of the box, despite having as much sand inside of it as possible to weigh it down. The laser-cut acrylic pieces worked as planned: they lit up throughout the user's game as they produced power using the exhibit. Our programming and wiring worked as well, calculating how many marbles were dropped, how long the button was pressed, how many rotations were completed, and calculating inputted data as gigawatts of energy. When fully set up, our exhibit consisted of the tri-fold, the wind energy component, the nuclear energy component, and the solar energy component (Fig. 28). The wind and solar components had the following measurements:

Trapezoidal Base: 12" x 9" x 9" x 3"

Trapezoidal Cap: 12" x 10.53" x 10.53" x 3"

Height: 6.96" (back); 1.5" (front)

The nuclear component had the following measurements:

Trapezoidal Base: 15" x 9" x 9" x 6"

Trapezoidal Cap: 15" x 10.53" x 10.53" x 6"

Height: 6.96" (back); 1.5" (front)

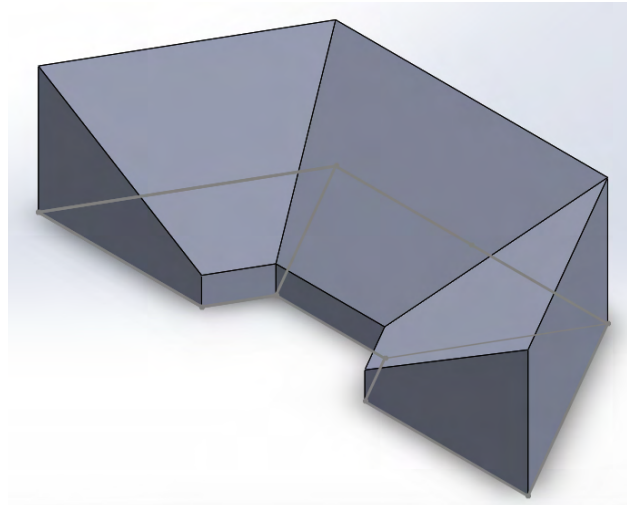

Fig. 28. New Exhibit Design SOLIDWORKS Model

Feedback

In our feedback survey given to the visitors following their interaction with our exhibit, we asked:

- Were you able to engage with all sections of the exhibit?
- On a scale of 1-10, how much did you enjoy the exhibit?
- Which of the three sections was your favorite?
- Rank these power sources (Nuclear, Solar, Wind) from least to most efficient.
- Do you have any feedback on how to improve this exhibit?

According to this feedback survey, all users confirmed that they engaged with all components of the exhibit, and, on average, rated the exhibit as a 9.125/10. 72% of visitors claimed the nuclear component as their favorite, and 87.5% of visitors correctly concluded that nuclear energy was the most efficient out of the three simulated energy sources. Following the first presentation of our exhibit on Friday, December 3rd, 2021, our most helpful feedback

was to provide more detailed instructions for each game, to weigh down the wind exhibit more, and to have sound effects throughout the game. We responded to all of this feedback and improved our exhibit before presenting it at the Boston Museum of Science on Saturday, December 4th, 2021.

Comparisons

As compared to other groups, our exhibit had many hands-on activities. Many other groups included buttons with predetermined possible solutions to their problem, serving as more of a trivia or Q&A exhibit. Our exhibit allowed the user to decide how they would like to spend their limited time. By including a time limit in our exhibit, the user wanted to play again to try and beat their score or see how much they can power with only one type of energy. Our design also included many different light features to reward the user while they are playing with the exhibit. Many groups included sound elements to keep the user's interest, while we included sound in addition to many LED elements. For instance, if the user created enough power, a location in Boston would light up to show their progress.

You are providing information for the reader and no analysis. You are setting up for your discussion where you can then argue or defend the output of your engineering design cycle using this information. For now, let the reader come to their own conclusions without referencing any design constraints or requirements. This section is not for you to state that your prototype meets the design requirements but to rather put forth all data and let the reader make that determination. You need to just let the evidence speak for itself for now. When you get to the discussion section, then you use it to start making your case.

Zeynep Ay

1.6 Discussion/Analysis

Results

Before presenting our exhibit to our primary client, the Museum of Science, Boston, our team first presented our exhibit to the Northeastern University Student Body and Faculty. This was presented on a 36” by 28” table in the Curry Student Center. Our team had a few judges come around and critique our exhibit with comments. We also had a set-up google form for people based on these comments as well as my own observations. The exhibit received a 9.125/10 rating on overall enjoyability and led to 87.5% of users correctly identifying nuclear energy as the most efficient zero emission energy source. I will lay out the strengths and weaknesses, as well as the overall success of our design based on the user feedback and personal interpretations.

Strengths

We had many comments from users who said that the overall quality and user experience of the exhibit was definitely the highlight of the exhibit itself. One commenter noted that the fabricated elements were very clean and easy to interpret. One other commenter mentioned that the engagement with the exhibits also enhanced the overall experience with the exhibit. This was done with the interactive elements, and solidified our efforts to make the exhibit more game-based. Another strength of our exhibit was the success rate in which it communicated our overall goal, which was for people to understand that nuclear energy is the most efficient and therefore destigmatizing the perception of nuclear energy in general.

Weaknesses

Personally, I felt as though we could have done more to point out to the users that nuclear energy is the most efficient form of energy. Although 87.5% is more than satisfactory, it is still a lower number than I personally anticipated. Another commentator felt as though it was a bit difficult to understand how to play the exhibit, even after implementing instructions into our GUI. There were also some instances where the wind energy portion of the wheel would shake, and in one instance break when being spun with brute force, which could have been avoided if the wind energy design had been adapted accordingly from the beginning.

Overall Review

In general, our team fulfilled almost all aspects of the assignment, including staying under budget with a total final budget of $90.80, transporting the exhibit without any major complications, and fitting the exhibit without fault onto the intended table.

1.7 Conclusion

In conclusion I would say based on the critiques, user data, and overall feedback from our professor, our exhibit satisfied our clients needs adequately and taught children the importance of sustainability, specifically the importance of implementing more nuclear energy into our energy production.

Results

As stated earlier, The exhibit received a 9.125/10 rating on overall enjoyability and led to 87.5% of users correctly identifying nuclear energy as the most efficient zero emission energy source.

Challenges

One of the major challenges our group and I faced was the issue with the motion sensor not sensing the marbles as they passed. At first, we thought it may have had to do with the code, but after further inspection we realized that the real issue was the shape of the marble itself. The way that the motion sensor works is that it sends out a trig signal, and receives the echo of that original signal back once it hits an object, and the time it takes for that echo signal to be returned is then used to find the distance traveled. Since the marble is circular, our team concluded that the signal was bouncing in a random direction due to the shape of the marble itself. After this, we agreed that a lever system that triggered the distance sensor would be the best option, but considered some backup planes, such as using the hall effect sensors to be triggered by the magnets contained in the Nuclear handle, and possibly borrowing some PIR sensors from another group.

Eventually, we were able to get the lever system to work with the rest of the exhibit:

Fig. 24. Nuclear Energy Lever system

Another issue our team had to deal with was the timing of

the code. There seemed to be multiple instances where the actual timing of the code would be elongated for longer than anticipated. This was eventually tracked down to be due to the initializations of the code.

Concluding Remarks

In general, I would say that our exhibit was a success. Seeing the children interacting with the exhibit, and replaying the games was one of the highlights of this entire process. It was also interesting to see some fellow advocates for nuclear energy asking questions and informing us further on the topics we had taken the time to research, which was very inspirational. Some parents were even learning about nuclear energy for the first time, which was also very interesting to see. Overall, the exhibit was a fun and educational activity for the children of the museum and gave us a lot of joy to present. In conclusion, I would

like to thank our clients, the Museum of Science, Boston,
and our Professor for giving us the opportunity.

1.8 Recommendations

Although I would say our museum exhibit was a success, there were many things in which I wish we had done differently. Some of these setbacks could have been avoided if our group did not have some intellectual blocks.

Intellectual Blocks

At the beginning of this process, there were certain subjects our group was not 100% familiar with. This was due to the fact that some of the necessary skills for this exhibit were things we were learning as we worked on the exhibit. For example, none of us knew how to use MatLab app designer before this project. After watching a few videos on how to use it, however, we were able to adapt the code into the GUI. The GUI itself took a lot of figuring out, and if we had been familiar with it beforehand there may have been less time wasted in this department.

Regrets & what I would do different

In all honesty I am pretty satisfied with the amount of time and effort I put into this project, however if there is one thing I wish I had done from the beginning is I would have voiced my opinion/feelings to my teammates more often. In terms of design, I regret that we did not implement the GUI and the light-up acrylics sooner into our design, since these two elements took up a large amount of our time in Milestone 5 and 6. I also wish we had logged some more photos of the actual construction of the exhibit.

Recommendations

For future Cornerstone students, my biggest recommendation would definitely be to identify what each teammate is good at, and split work according to each individual's strengths. During milestone 4, my team implemented this very well. As someone who leans more towards the coding and hardware elements as opposed to the design and construction elements, it was nice to have it so each person was working on what they were good at. I also felt as though during Milestone 4 is when our team really felt like a team. Another recommendation is to teach each member of your group with respect, and realize that not every group member is perfect and has their flaws. Also, understand what each teammate's challenges may be; do they have a disability that may make it difficult for them to get to meetings on time? What are their cultural backgrounds? Are they an international student? How does their background influence how they act? etc etc. This is something I wish my teammates and I spoke about more openly at the beginning of the project. Another recommendation is to not be afraid of confrontation. As someone who dreads confrontation myself, learning how to deal with awkward moments was a key take-away from this entire process.

1.9 Lessons Learned

For the purposes of evaluating the lessons learned during this process, I will express my personal contributions, the reflections of my learning, the reflections of my team's work, and our resources.

Contributions

Milestone #5

For milestone 5, our team had to complete 90% of our exhibit. My personal contribution to this was converting the original Arduino code into MatLab, learning how to use Matlab App Designer, rewriting the code into MatLab App designer, and then testing all of it with the assembled hardware. Although the solar portion of the exhibit was working, the wind energy portion could be more accurate (this was solved by acquiring a more effective hall effect sensor and more magnets), and the nuclear energy portion was not working due to the aforementioned issues. I was very proud that I was able to create the GUI and adapt to the MatLab. For this milestone, each team member also had to 3-D print a component that would be used in the Museum exhibit. Mine was the Button for the solar portion. The purpose was that as the sun in the corner of the exhibit would light up, the user would have to push down the button, hence creating "solar energy" Originally, I printed the following design:

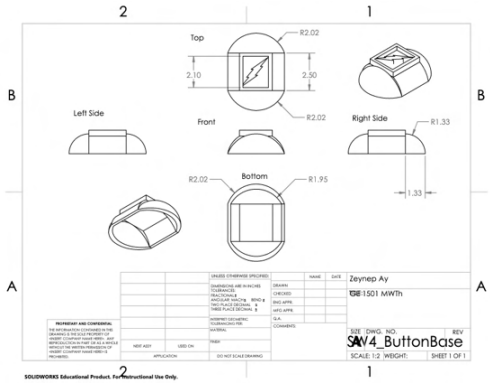

However, this was eventually adjusted to the following design:

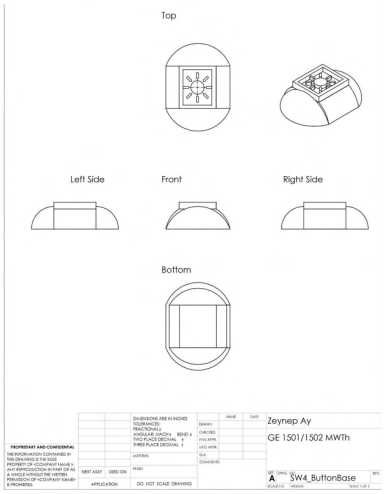

Milestone #6

Over Thanksgiving break, I worked with the PIR sensors and hall effect sensors to test if this could be an alternative to the lever system we eventually implemented. I also helped working on adapting the GUI, and helped with soldering and construction a minimal amount.

Resources

Our group had an overall budget of $100, which we met by only spending $90.80. I personally bought various electrical components from Amazon Prime, and this was my personal contribution in terms of buying the resources.

Fig. 16. Solar Energy Button SolidWORKS Draft #1

Fig. 16. Solar Energy Button SolidWORKS Draft #2

I also offered up my SparkFun kit for us all to use, and bought some of the pieces of wood for construction.

Reflections on Learning

This project has helped me refine my coding abilities, my time management skills, my soldering abilities, and my abilities to communicate with others. Coming out of a time where I had very limited interaction with other individuals Due to the pandemic, it was definitely interesting to be in a project that required me to communicate with other individuals on a regular basis. I felt as though I learned the value of communication above all other things. As someone who

Reflections on Working in a Team

I felt as though the overall team dynamic was overall positive, but had some drawbacks. This definitely taught me how to deal with difficult individuals, communicate my feelings, and know when to talk to someone for advice on how to handle a misunderstanding efficiently. I feel as though more could have been done to communicate on my part and make clear what I was doing at all times.

As a team, we were pretty organized on multiple different fronts, this I am proud of. We set up a google drive on day 1, and organized everything appropriately from there on out. In terms of keeping some of the more physical components we were a bit more disorganized, but still were able to be maintained

Works Cited

[1] A. Liu, Y. Ma, J. M. A. Gunawardena, P. Egodawatta, G. A. Ayoko, and A. Goonetilleke, "Heavy Metals Transport Pathways: The importance of atmospheric pollution contributing to stormwater pollution," Ecotoxicology and Environmental Safety, vol. 164, pp. 696–703, 2018.

[2] American Alliance of Museums, "Standards for Museum Exhibitions and Indicators of Excellence."

[3] "Best practice in making museums more accessible to visually impaired visitors," MuseumNext, 20-Feb-2020. [Online]. Available: https://www.museumnext.com/article/making-museums-accessible-to-visually-impaired-visitors /. [Accessed: 19-Oct-2021].

[4] B. Laurie and J. Powell, "Guide to Exhibit Development," Smithsonian Exhibits, [Online]. Available: exhibits.si.edu

[5] "Certifications," *EDGE Certification*, 20-Oct-2021. [Online]. Available: https://edge-cert.org/certifications/. [Accessed: 08-Dec-2021].

[6] "Designing exhibits to engage girls," Designing Exhibits to Engage Girls | InformalScience.org, 21-May-2019. [Online]. Available: https://www.informalscience.org/news-views/designing-exhibits-engage-girls. [Accessed: 19-Oct-2021].

[7] H. Kwon, R. M. Capraro, and M. M. Capraro, "When I Believe, I Can: Success STEMS from My Perceptions," Canadian Journal of Science, Mathematics and Technology Education, vol. 21, no. 1, pp. 67–85, Feb. 2021.

[8] J. Barcena-Vazquez and K. Caro, "Designing a Video Game to Support Climate Change Awareness in a Museum Exhibition Context," Proceedings of the IX Latin American Conference on Human Computer Interaction, Sep. 2019.

[9] J. Bartolacci, "Accessible museum: Can thoughtful design help improve the experience of viewing art for visitors with disabilities? - architizer journal," Journal, 06-Nov-2017. [Online]. Available:https://architizer.com/blog/inspiration/industry/accessibility-in-museums/. [Accessed:19-Oct-2021].

[10] J. Jacobo, "Irish teen invents method to remove microplastics from ocean, wins $50K Google Science Fair prize," ABC News, 02-Aug-2019. [Online]. Available: https://abcnews.go.com/Technology/irish-teen-invents-method-remove-microplastics-ocean-wins/story?id=64731771. [Accessed: 09-Dec-2021].

[11] J. P. Rowe, E. V. Lobene, B. W. Mott, and J. C. Lester, "Play in the Museum: Design and Development of a Game-Based Learning Exhibit for Informal Science Education," International Journal of Gaming and Computer-Mediated Simulations, vol. 9, no. 3, pp. 96–113, 2017.

[12] K. Flanagan, P. Branchu, L. Boudahmane, E. Caupos, D. Demare, S. Deshayes, P. Dubois, L. Meffray, C. Partibane, M. Saad, and M.-C. Gromaire, "Field performance of two biofiltration systems treating micropollutants from road runoff," Water Research, vol. 145, pp. 562–578, 2018.

[13] L. Andre, T. Durksen, and M. L. Volman, "Museums as avenues of learning for children: A decade of research," Learning Environments Research, 27-Oct-2016. [Online]. Available: https://link.springer.com/article/10.1007/s10984-016-9222-9#Sec16. [Accessed: 19-Oct-2021].

[14]"Layton energy densities - Drexel University." [Online]. Available: https://www.drexel.edu/~/media/Files/greatworks/pdf_sum10/WK8_Layton_EnergyDensities.ashx. [Accessed: 08-Dec-2021].

[15] P. Lalzarliana Paihte, A. C. Lalngaihawma, and G. Saini, "Recycled aggregate filled waste plastic bottles as a replacement of bricks," Materials Today: Proceedings, vol. 15, pp. 663–668, 2019.

[16] National Geographic Society, "Air Pollution," National Geographic Society, 09-Oct-2012. [Online]. Available: https://www.nationalgeographic.org/encyclopedia/air-pollution/#:~:text=Long%2Dterm%20health%20effects%20from,air%20pollutants%20cause%20birth%20defects. [Accessed: 08-Dec-2021].

[17] "About solar energy," SEIA. [Online]. Available: https://www.seia.org/initiatives/aboutsolar-energy. [Accessed: 07-Dec-2021].

[18] "Best practice in making museums more accessible to visually impaired visitors," MuseumNext, 20-Feb-2020. [Online]. Available: https://www.museumnext.com/article/making-museums-accessible-to-visually-impaired-visitors/. [Accessed: 19-Oct-2021].

[19] "Designing exhibits to engage girls," Designing Exhibits to Engage Girls | InformalScience.org, 21-May-2019. [Online]. Available: https://www.informalscience.org/news-views/designing-exhibits-engage-girls. [Accessed: 19-Oct-2021].

[20] "Nuclear power is the most reliable energy source and it's not even close," Energy.gov. [Online]. Available: https://www.energy.gov/ne/articles/nuclear-power-most-reliable-energy-source-and-its-not-even-close. [Accessed: 07-Dec-2021].

[21] "Universal Design Plan Exhibit Design & Development." [Online]. Available: https://www.mos.org/sites/dev-elvis.mos.org/files/docs/misc/MOS_UD_Plan.pdf. [Accessed: 08-Dec-2021].

[22] "Waste-to-energy," Covanta. [Online]. Available: https://www.covanta.com/what-we-do/waste-to-energy. [Accessed: 19-Oct-2021].

[23] "What is nuclear energy?," Nuclear Energy Institute, 22-Nov-2019. [Online]. Available: https://www.nei.org/fundamentals/what-is-nuclear-energy. [Accessed: 07-Dec-2021].

[24]"What is sustainability?," UCLA Sustainability. [Online]. Available: https://www.sustain.ucla.edu/what-is-sustainability/. [Accessed: 06-Dec-2021].

[25] "What is Universal Design," Centre for Excellence in Universal Design, 2020. [Online]. Available: https://universaldesign.ie/what-is-universal-design/. [Accessed: 08-Dec-2021].

[26]"What is wind power?," WINDExchange. [Online]. Available: https://windexchange.energy.gov/what-is-wind. [Accessed: 07-Dec-2021].

[27] Zhang, H., Zhang, L., Han, X., Kuang, L; Hua, D. (2018). Guanidine and Amidoxime Cofunctionalized Polypropylene Nonwoven Fabric for Potential Uranium Seawater Extraction with Antifouling Property. Industrial and Engineering Chemistry Research

Appendices

○ Appendix A – Team Contract

Zeynep Ay, Nick Gorycki, Katie Tschoepe, Lauren Ward
Professor Schulte Grahame
Engineering Cornerstone
15 September 2021

Respect

What is your definition of work lateness and policy for organized submission?
We define work lateness as not sending your fully complete work to the group leader by the decided deadline. For organized submission we will make sure our work is completed 2-3 days before the deadline, so the person responsible for organizing all of our work is not rushed for time. We will also meet once in those 2-3 days to make sure the presenter understands everyone's work.

What is your definition of meeting punctuality and procedure for a successful meeting?
We define meeting punctuality as being on-time for meetings, with a 10 minute grace period excluding class conflicts that are already known. Our procedure for a successful meeting will be to make goals beforehand that we want to complete in the meeting.

What will be the procedure if someone violates these expectations?
The individual who violates the grace period 2 times is expected to compensate by giving each other member with a coffee of their choice.

Commitment

What hours do you expect people to be available to meet? Answer questions?
We expect each other to be available to meet Monday through Thursday from 10am-9pm when they are not in classes or have previously mentioned conflicts. We also intend to work some Friday mornings as needed. If necessary, we will decide on weekend availability.
What will your expectations for quality be? / How will you measure this value?
Each individual should do their assigned task/work to presentation standards, meaning that they should not be embarrassed to show it to other team members.
What will be the procedure if someone violates these policies?
The individual who violates these policies must redo their task before the next meeting.

Transparency

How will your team make decisions? / What will be the consensus?
We will make decisions with a unanimous decision.
How will you ensure all information is shared and open to all?
We will all post our work to the shared google drive, so all team members will be able to view the group's information without trouble.
What will be the procedure if someone feels excluded?
The individual who feels excluded will bring up the issue to the group, and the group will decide on a solution to make the individual feel more included.

Communication

Identify the method by which you will primarily communicate with each other.
We will utilize an iMessage group chat.
How will you ensure everyone's voice is heard?
We will allow everyone the chance to voice their opinions without judgment. When it appears a discussion has ended, we will ask if anyone has any other input before moving onto the next topic.
What will you do when there is a disagreement?
As a group we will hear both sides of the disagreement and figure out a way to compromise for a solution.
How will you periodically reflect on strengths and issues as a group? (provide a plan)
We will have weekly meetings on Wednesdays in the range of 10:30am-2:00pm.

Justice

How will you define equitable contribution?
Everyone completing the work that was assigned to them from the team and does this work up to the standard we have set. Everyone should have nearly an equal amount of work.
How will your group work to prevent conflict?

Everyone is honest with each other and pitches in their ideas. If a conflict arises due to one team member, one other team member will confront them in order to make it feel like less of an intervention.

What will be the procedure if someone stops contributing?

The first and second time someone stops contributing, we (as a group) will give them a warning, and the third time we will alert the professor

Team Goals

1. Complete every assignment early, to the very best of our capabilities.
2. Use our time efficiently in group meetings.
3. Learn how to collaborate with others effectively in order to be better team members in future scenarios.
4. Learn how to use engineering principles creatively and (hopefully) successfully.

○ **Appendix B - Decision Analysis**

Musts		Nuclear Sea-water		Micro-plastics		Regional Climate Change		Storm-water	
Transportable		Yes		Yes		Yes		No-Go	
Accessible		Yes		Yes		Yes		Yes	
Gender-Inclusive		Yes		Yes		Yes		Yes	
Game-Based		Yes		Yes		No-Go		Yes	
Wants	**Weight**	**Score**	**Weight x Score**	**Score**	**Weight x Score**	**Score**	**Weight x Score**	**Score**	**Weight x Score**
Educational	10	10	100	10	100	N/A	N/A	N/A	N/A
Comprehensible	10	8	80	9	90	N/A	N/A	N/A	N/A
Interactiveness	9	10	90	8	72	N/A	N/A	N/A	N/A
Easily reset	5	6	30	3	15	N/A	N/A	N/A	N/A
Kid-proof	8	10	80	3	24	N/A	N/A	N/A	N/A
Applicability	7	8	56	8	56	N/A	N/A	N/A	N/A
Minimalism	6	8	48	8	48	N/A	N/A	N/A	N/A
Multi Sensory	6	8	48	5	30	N/A	N/A	N/A	N/A
		Total Score:	532	**Total Score:**	435	**Total Score:**	N/A	**Total Score:**	N/A
		Final Decision: Nuclear Sea-water idea resulted in the highest score, thus will be the idea we primarily explore in the following weeks.							

Our decision matrix (picture above) displays our work completed in Milestone 2 of this project. The musts we defined for our exhibit as a group were that it had to be Transportable, Accessible, Gender-Inclusive, and Game-Based. These standards resulted in the regional climate change and stormwater exhibits being eliminated. From there, we evaluated the remaining two exhibits with reference to the weighted wants. These stated that we wanted the exhibit to be educational, comprehensible, interactive, easily reset, kid-proof, applicable, minimalistic, and multi sensory.

○ Appendix C - Final AutoCAD/Solidworks Drawings

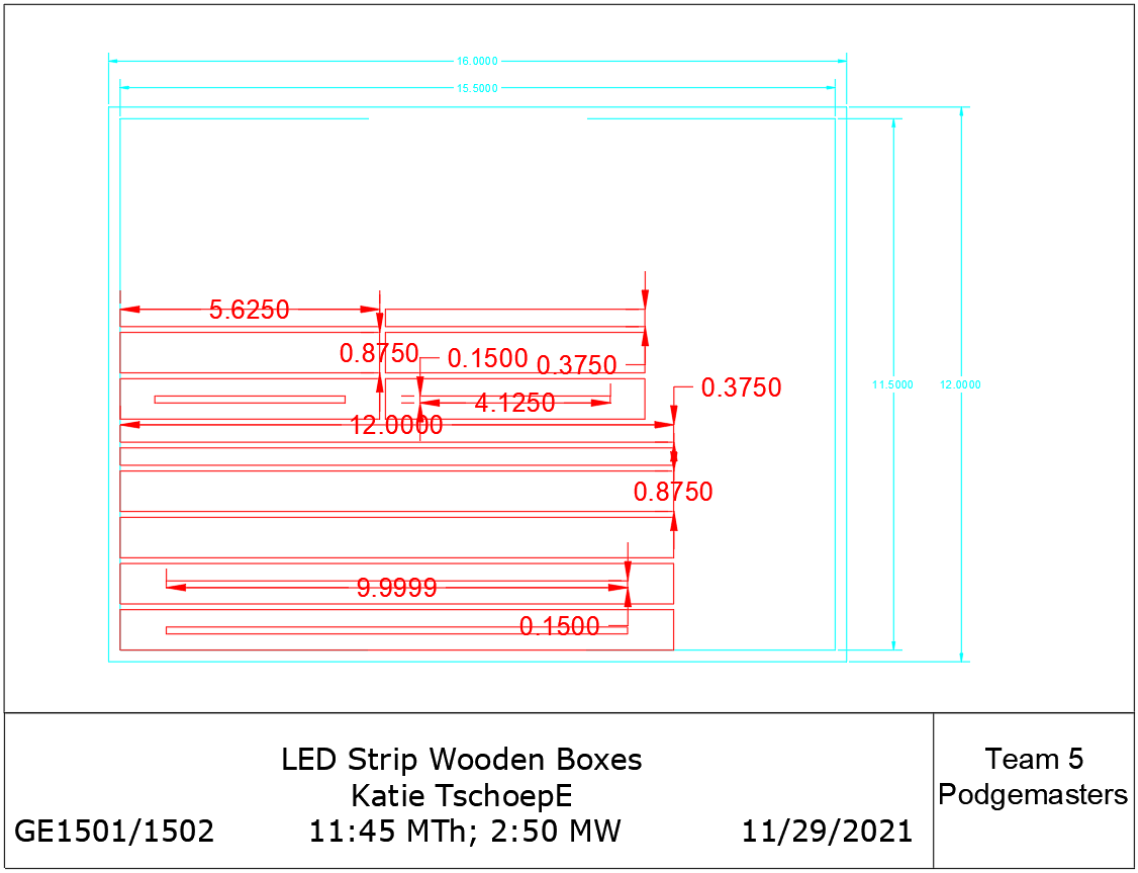

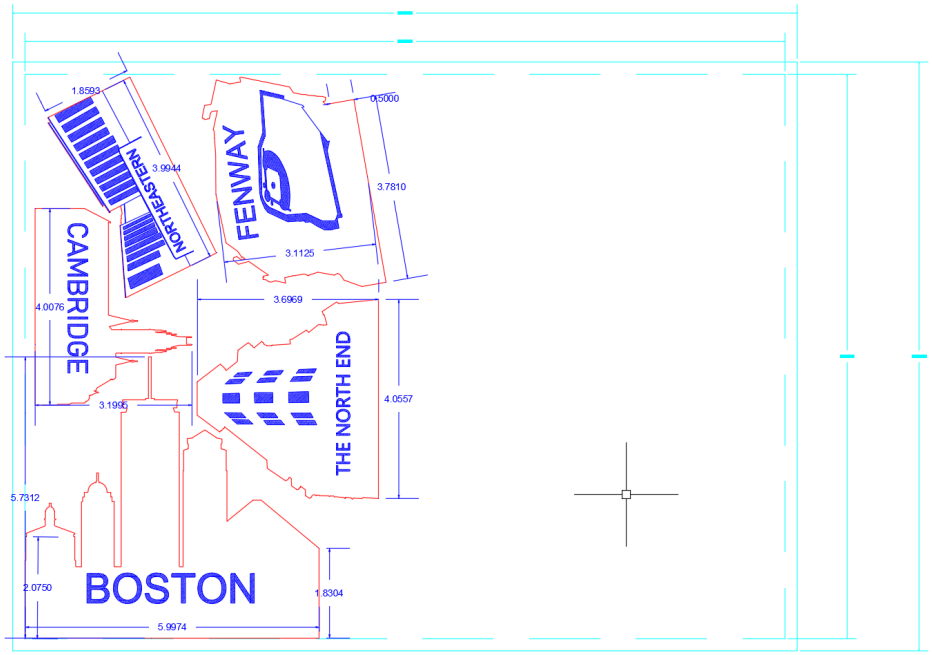

Clear Acrylic Boston Location Pieces Katie Tschoepe GE1501/1502 11:45 MTh; 2:50 MW 11/23/2021	Team 5 Podgemasters

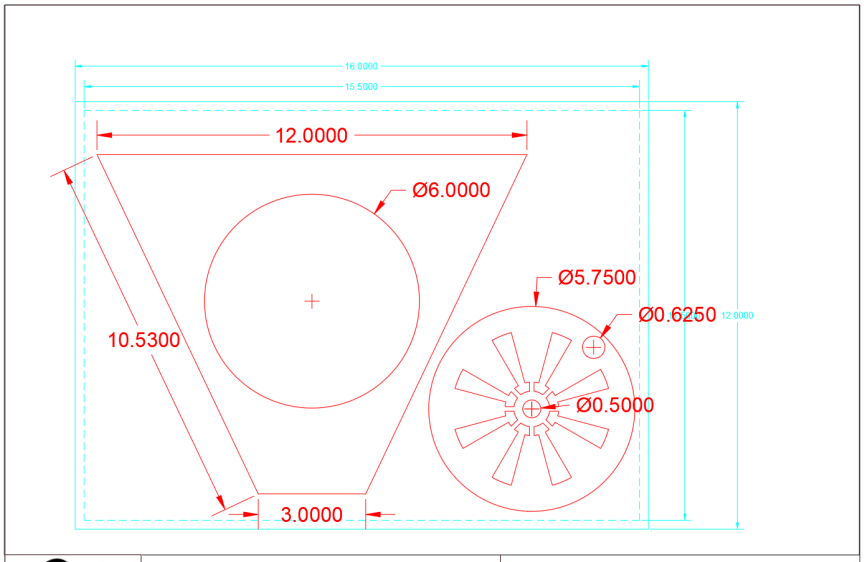

	Team 5: Podge Masters		Appendix C
	GE 1501/1502	11:45 MTh; 2:50 MW	12/9/21

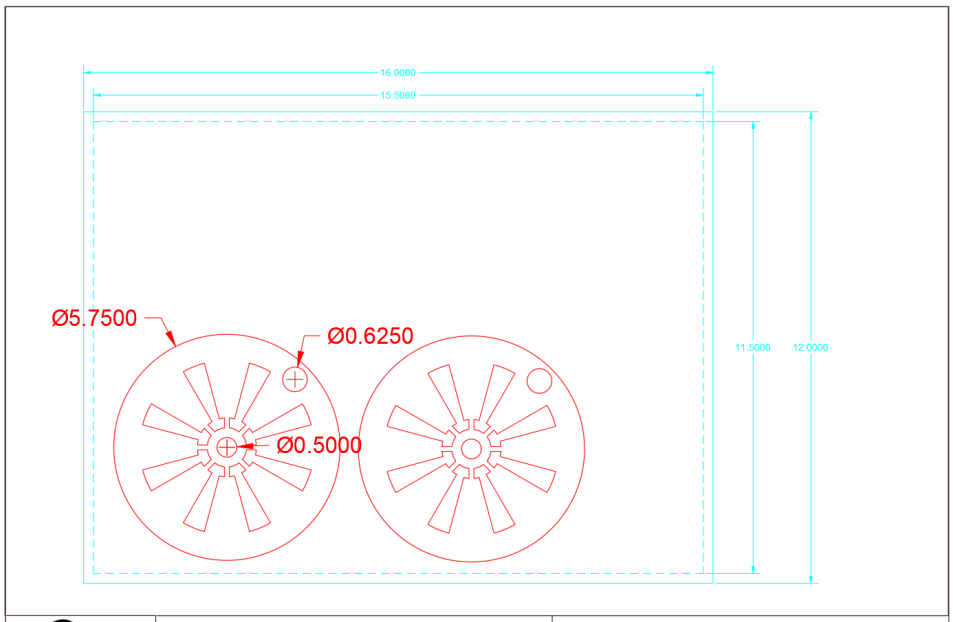

Lauren	Team 5: Podge Masters		Appendix C
	GE 1501/1502	11:45 MTh; 2:50 MW	12/9/21

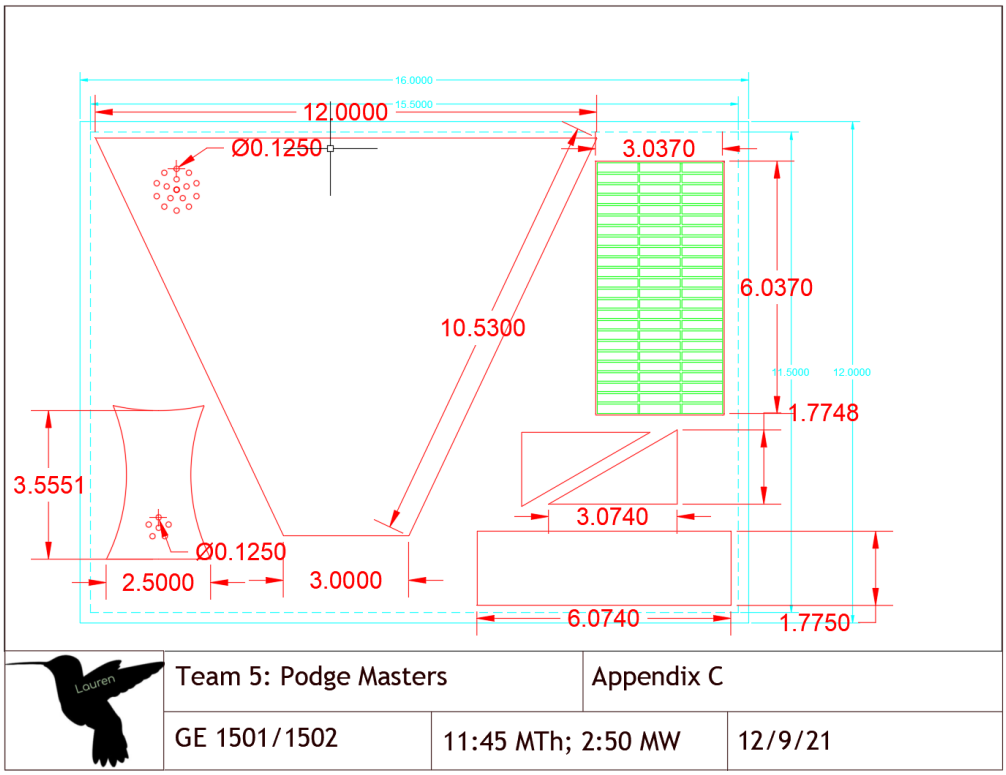
16.0000
15.5000
12.0000
Ø0.1250
3.0370
6.0370
10.5300
11.5000
12.0000
1.7748
3.5551
3.0740
Ø0.1250
2.5000
3.0000
6.0740
1.7750
Team 5: Podge Masters
Appendix C
GE 1501/1502
11:45 MTh; 2:50 MW
12/9/21

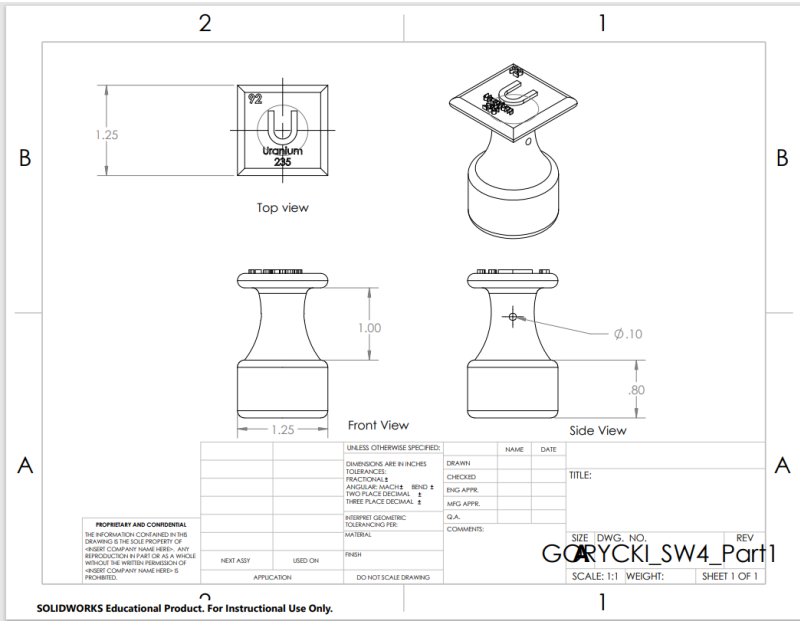
2
1
B
A
1.25
Uranium
235
Top view
1.00
Ø.10
.80
1.25
Front View
Side View
UNLESS OTHERWISE SPECIFIED:
DIMENSIONS ARE IN INCHES
TOLERANCES:
FRACTIONAL ±
ANGULAR: MACH ± BEND ±
TWO PLACE DECIMAL ±
THREE PLACE DECIMAL ±
INTERPRET GEOMETRIC TOLERANCING PER:
MATERIAL
FINISH
DO NOT SCALE DRAWING
NAME
DATE
DRAWN
CHECKED
ENG APPR.
MFG APPR.
Q.A.
COMMENTS:
TITLE:
SIZE
DWG. NO.
REV
GORYCKI_SW4_Part1
SCALE: 1:1
WEIGHT:
SHEET 1 OF 1
PROPRIETARY AND CONFIDENTIAL
NEXT ASSY
USED ON
APPLICATION
SOLIDWORKS Educational Product. For Instructional Use Only.

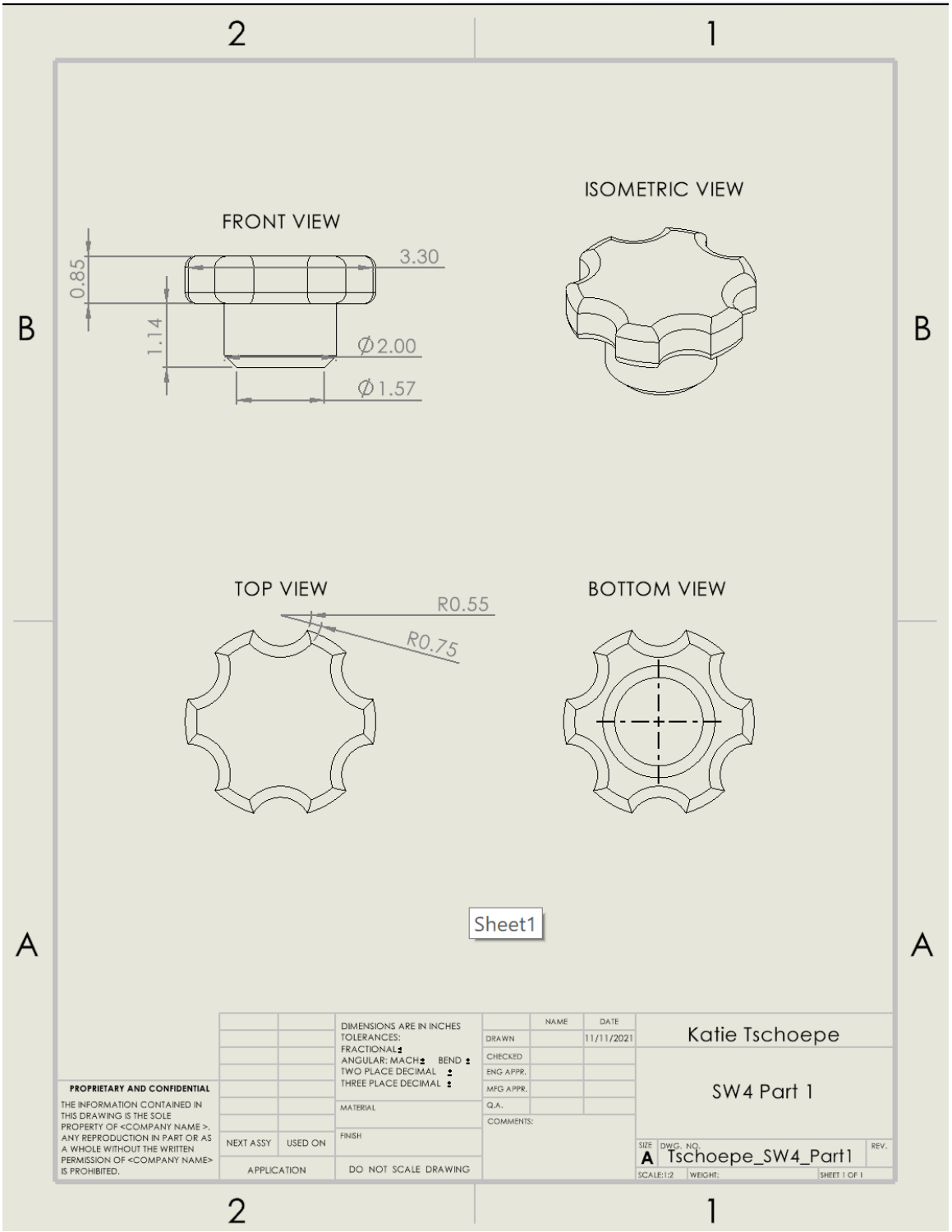
FRONT VIEW
3.30
0.85
1.14
Ø2.00
Ø1.57
ISOMETRIC VIEW
TOP VIEW
R0.55
R0.75
BOTTOM VIEW
Sheet1
PROPRIETARY AND CONFIDENTIAL
THE INFORMATION CONTAINED IN THIS DRAWING IS THE SOLE PROPERTY OF <COMPANY NAME >. ANY REPRODUCTION IN PART OR AS A WHOLE WITHOUT THE WRITTEN PERMISSION OF <COMPANY NAME> IS PROHIBITED.
NEXT ASSY
USED ON
APPLICATION
DIMENSIONS ARE IN INCHES
TOLERANCES:
FRACTIONAL ±
ANGULAR: MACH ± BEND ±
TWO PLACE DECIMAL ±
THREE PLACE DECIMAL ±
MATERIAL
FINISH
DO NOT SCALE DRAWING
NAME
DATE
DRAWN
11/11/2021
CHECKED
ENG APPR.
MFG APPR.
Q.A.
COMMENTS:
Katie Tschoepe
SW4 Part 1
SIZE
A
DWG. NO.
Tschoepe_SW4_Part1
REV.
SCALE:1:2
WEIGHT:
SHEET 1 OF 1

○ Appendix D – Product Testing Results

Were you able to engage with all sections of the exhibit?	Rate your experience with this exhibit (1-10).	What was your favorite exhibit component?	Rank the types of energy sources by efficiency [Nuclear].	Rank the types of energy sources by efficiency [Solar].	Rank the types of energy sources by efficiency [Wind].	Do you have any feedback regarding our exhibit?	Our Response on Presentation Day 2
Yes	10	Nuclear	Largest	In the middle	In the middle	Make the wheel look more like a wind turbine	N/A
Yes	8	Nuclear	Largest	Smallest	In the middle	Include more specific instructions about the goal and rules of the game	Altered the GUI to display step by step directions
Yes	10	Nuclear	Largest	Smallest	In the middle		
Yes	9	Nuclear	Largest	Smallest	In the middle		
Yes	9	Nuclear	Largest	Smallest	In the middle		
Yes	10	Solar	Largest	Smallest	In the middle	Nothing, I really liked all of it!	
Yes	8	Wind	Largest	In the middle	Smallest		
Yes	10	Nuclear	In the middle	Largest	In the middle		
Yes	6	Nuclear	Largest	In the middle	Largest		
Yes	8	Wind	Largest	In the middle	Smallest		
Yes	10	Nuclear	Largest	Smallest	In the middle	Show the person how hard nuclear is to produce despite being the most efficient	N/A
Yes	10	Nuclear	Smallest	In the middle	Largest		
Yes	9	Nuclear	Largest	Smallest	In the middle		
Yes	7	Nuclear	Largest	Smallest	In the middle	More time	We believed that our time limit was long enough
Yes	8	Nuclear	Largest	In the middle	Smallest	Put something grippy under the wind section to hold it in place	Added duct tape to bottom of box
Yes	8	Wind	Largest	Smallest	In the middle	The magnet response on the nuclear is sometimes "iffy" and I'm not sure when the game ends	Added sound effects and large "Time's Up!" screen
Yes	10	Nuclear	Largest	Smallest	In the middle	Nothing, awesome exhibit!!!	
Yes	8	Wind	Largest	Smallest	In the middle	Have a sound effect when you start/end (was unclear)	Added sound effects throughout game
Yes	10	Nuclear	Largest	In the middle	Smallest		
Yes	10	Nuclear	Largest	In the middle	Smallest		
Yes	10	Wind	Largest	Smallest	In the middle		
Yes	9	Nuclear	Largest	Smallest	In the middle	Decorate the nuclear exhibit more	N/A
Yes	10	Wind	Smallest	In the middle	Largest		
Yes	10	Nuclear	Largest	Smallest	In the middle		
Yes	10	Nuclear	Largest	In the middle	Smallest		
Yes	9	Nuclear	Largest	In the middle	Smallest		
Yes	10	Wind	In the middle	In the middle	Largest		
Yes	10	Nuclear	Largest	Smallest	In the middle		
Yes	10	Nuclear	Largest	In the middle	Smallest		
Yes	10	Nuclear	Largest	Smallest	In the middle		
Yes	9	Nuclear	Largest	Smallest	In the middle		
Yes	7	Wind	Largest	Smallest	In the middle		
Level of Engagement: 100%	**Average Rating: 9.125**	**Overall Favorite: Nuclear (72%)**	**Correct: 87.5%**	**Correct: 56.25%**	**Correct: 62.5%**		

○ APPENDIX E – CODE USED IN PROJECT

This code was written and utilized in MatLab App Designer along with a Graphic User interface

```
classdef app_museum_exhibit < matlab.apps.AppBase

    % Properties that correspond to app components
    properties (Access = public)
        UIFigure                    matlab.ui.Figure
        TimesupLabel                matlab.ui.control.Label
        windmessage                 matlab.ui.control.Label
        nucmessage                  matlab.ui.control.Label
        solarmessage                matlab.ui.control.Label
        endmessage                  matlab.ui.control.Label
        centermessage               matlab.ui.control.Label
        ofyourenergycamefromsolarEditField  matlab.ui.control.NumericEditField
        ofyourenergycamefromsolarEditFieldLabel  matlab.ui.control.Label
        ofyourenergycamefromwindEditField  matlab.ui.control.NumericEditField
        ofyourenergycamefromwindEditFieldLabel  matlab.ui.control.Label
        ofyourenergycamefromnuclearEditField  matlab.ui.control.NumericEditField
        ofyourenergycamefromnuclearEditFieldLabel  matlab.ui.control.Label
        SolarEnergyCapturedGauge        matlab.ui.control.LinearGauge
        SolarEnergyCapturedGaugeLabel   matlab.ui.control.Label
        WindEnergyCapturedGauge         matlab.ui.control.LinearGauge
        WindEnergyCapturedGaugeLabel    matlab.ui.control.Label
        UraniumPiecesCollectedGauge     matlab.ui.control.LinearGauge
        UraniumPiecesCollectedGaugeLabel  matlab.ui.control.Label
        GreatJobLabel                   matlab.ui.control.Label
        goodjobmoby                     matlab.ui.control.Image
        greatjobtextbubble              matlab.ui.control.Image
        TotalenergyinGWhEditField       matlab.ui.control.NumericEditField
        TotalenergyinGWhEditFieldLabel  matlab.ui.control.Label
        annie                           matlab.ui.control.Image
        timnmoby                        matlab.ui.control.Image
        startmoby                       matlab.ui.control.Image
        all3characters                  matlab.ui.control.Image
        TimerGauge                      matlab.ui.control.Gauge
        TimerGaugeLabel                 matlab.ui.control.Label
        StartButton                     matlab.ui.control.Button
        PresstheButtontoStartLabel      matlab.ui.control.Label
        background                      matlab.ui.control.Image
    end


    methods (Access = private)

    end
```

```
% Callbacks that handle component events
methods (Access = private)

    % Button pushed function: StartButton
    function StartButtonPushed(app, event)
    app.StartButton.Visible =0; %Everything from here on out occurs after the startbutton is pushed
    app.all3characters.Visible = 0; %These visibily sections make sure the end screen is closed as the program restarts
    app.startmoby.Visible = 0;
    app.PresstheButtontoStartLabel.Visible = 0;
  app.centermessage.Text = 'You have 1 minute to make as much power as possible. Can you power all of Boston?';
  app.centermessage.Visible = 1;% this displays a number of messages to the user as the game initializes
  pause(5);
  app.centermessage.Text = 'The buildings on the board will light up as you make energy!';
  pause(5);
  app.centermessage.Visible = 0;
  app.windmessage.Visible = 1;
  pause(5);
  app.windmessage.Visible = 0;
  app.nucmessage.Visible = 1;
  pause(5);
  app.nucmessage.Visible = 0;
  app.solarmessage.Visible = 1;
  pause(5);
  app.solarmessage.Visible = 0;
  app.centermessage.Text = 'Ready?';
  app.centermessage.Visible = 1;
  pause(3);
      app.centermessage.Text = '3';
                a = arduino('COM5','Uno',"Libraries","Ultrasonic"); % initializes the redboard
          app.centermessage.Text = '2';
          pause(1);

          %% Connect to board



          %% Define variables for pins
          led_pin = 'D6';        %% The sun pin
          nucLed = 'D4';        %% The smokestack pin
          button_pin = 'D7';        %% The push buttons pin int hall_pin = 0;

          led1 = 'D8';
          led2 ='D9';
          led3 ='D10';
          led4 ='D11';
          led5 ='D12';

          motion_echo_pin = 2;    %% See the diagram on theis website for the difference between echo and trig:
          motion_trig_pin = 3;    %% https://create.arduino.cc/projecthub/abdularbi17/ultrasonic-sensor-hc-sr04-with-arduino-tutorial-327ff6
```

```
        hall_pin = 'A0';          %% The Hall effect sensor pin

        counter_marbles = 0;  %% Counts the number of marbles the child has              (Nuclear Energy part of the exhibit)
        counter_spins = 0;    %% Counts the number of spins the child has completed        (Wind Energy part of the exhibit)
        counter_sec = 0;      %% Counts the number of seconds the child pushed the button  (Solar Energy part of the exhibit)
        app.centermessage.Text = '1';
        pause(1);

        solarcounter = 1;
        solartimer=0;
        solarseconds = 0;

        lastDistance = 6;
        lastResult = 0;
        nucLightCount = 0;

        %audiofilesetup
        [y fs]=audioread('Mobybeep.mp3');%sets up the file for the moby beeping sound effect
        playerbeep = audioplayer(y,fs);




        ultrasonicObj = ultrasonic(a,'D2','D3'); % sets up distance sensor
        energy = 0;
        app.centermessage.Text = ' ';
        app.UraniumPiecesCollectedGauge.Visible = 1; % all of these visibilities show the meters for energy produced that the user sees.
    app.WindEnergyCapturedGauge.Visible = 1;
    app.SolarEnergyCapturedGauge.Visible = 1;
    app.UraniumPiecesCollectedGaugeLabel.Visible = 1;
    app.WindEnergyCapturedGaugeLabel.Visible = 1;
    app.SolarEnergyCapturedGaugeLabel.Visible = 1;
    app.annie.Visible = 1;
    app.TimerGauge.Visible = 1;
    app.TimerGaugeLabel.Visible = 1;
    app.timnmoby.Visible = 1;
    app.TotalenergyinGWhEditField.Visible =1;
    app.TotalenergyinGWhEditFieldLabel.Visible =1;
        pause(.75);
        app.centermessage.Text = ' ';


for time = (1:300) %runs through the loop 300 times for 1/5 of a second each

            % Nuclear Exhibit
            distance = readDistance(ultrasonicObj); % reads the distance sensor
            distance = distance * 100; % convers to cm as it is read in m
```

```
% Checking if a marble has been dropped
    if(distance < 6.3 && lastDistance > 6.3)   %%If there is an object ~6.35 cm(2 inches) or closer and the last distance was greater than said distance
  counter_marbles = counter_marbles + 1; %adds a value to how many marbles the user has collected
  writeDigitalPin(a,nucLed,true); % turns the nuclear led on
  nucLightCount=6; % sets a timer within the loop to keep the nuclear light on for 1.2 seconds
end
nucLightCount = nucLightCount - 1; %timer system for smokestack lights
if nucLightCount>0 % the count goes down every loop, so after 6 loops the light turns off again
writeDigitalPin(a,nucLed,true);
end
if nucLightCount<0
writeDigitalPin(a,nucLed,false);
end

     lastDistance = readDistance(ultrasonicObj); % reads the value in again for distance, but this is used the next time the loop runs to decide whether the lever has been triggered again or the code is reading the same marble
lastDistance= lastDistance * 100;



%% Wind Exhibit
result_wind = readDigitalPin(a, 'A0');
if result_wind == 0 && lastResult == 1
    counter_spins = counter_spins + 1; % reads if a magnet is detected at the hall sensor. If it has, and the last time the loop ran, there was no magnet, then add a count to the spins for the wind exhibit
end

lastResult =readDigitalPin(a, 'A0');

% Solar Exhibit
if solartimer<1 % this timer counts down every loop
  random_num = randi(5) + 2; % randomly sets the light to be on for a value between 2 and 7 seconds
  solartimer = random_num;
  if mod(solarcounter, 2) == 1 % if the counter is odd, the light is off
    writeDigitalPin(a,led_pin,false);
    light = 0;
  end
  if mod(solarcounter, 2) == 0 % if the counter is even, the light is on
    writeDigitalPin(a,led_pin,true);
    light = 1;
  end
  solarcounter = solarcounter+1; %everytime the timer resets, this counter rises, causeing the light to switch between on and off
end
solartimer=solartimer-.2; %subtracts a fifth of a second from the time every time the loop runs

button=readDigitalPin(a, button_pin);
if button == 1 && light ==1
  solarseconds = solarseconds + .2;% if the button is pressed and the light is on, the number of seconds held rises
```

```
            end



%                pause(.09);
            if (mod(time,5)==0)
            app.TimerGauge.Value = 61-time/5;% displays a timer using the for loops value
            end

            %% Calculations
                        total_solar_energy = solarseconds * .04;  %% in gigawatts with 200000 solar panels running for this amount of seconds
app.SolarEnergyCapturedGauge.Value = solarseconds;

           total_wind_energy = counter_spins * .05;  %% in gigawatts with 1000 windmills spinning this many times
           app.WindEnergyCapturedGauge.Value = counter_spins;

           total_nuclear_energy = counter_marbles * .48;  %% in gigawatts with the same mass of uranium as the user collected in marbles

           if counter_marbles < 20
          app.UraniumPiecesCollectedGauge.Value = counter_marbles;
           end
          energy = total_solar_energy +  total_wind_energy  + total_nuclear_energy; % combines all of the energies that the user collected


if energy > .4 % first threshold that the user can light up (moby sound plays)
   writeDigitalPin(a,led1,true);

   play(playerbeep);
end
if energy > 1 % second threshold that the user can light up (moby sound plays)

   writeDigitalPin(a,led2,true);
   play(playerbeep);

end
if energy > 3% third threshold that the user can light up (moby sound plays)
   writeDigitalPin(a,led3,true);

   play(playerbeep);
end
if energy > 4% fourth threshold that the user can light up (moby sound plays)
   writeDigitalPin(a,led4,true);

   play(playerbeep);
end
if energy > 7% fifth threshold that the user can light up (moby sound plays)
   writeDigitalPin(a,led5,true);
```

```
    play(playerbeep);
end
app.TotalenergyinGWhEditField.Value = energy;

end
    app.UraniumPiecesCollectedGauge.Visible = 0; % active game screen dissapears
    app.WindEnergyCapturedGauge.Visible = 0;
    app.SolarEnergyCapturedGauge.Visible = 0;
    app.UraniumPiecesCollectedGaugeLabel.Visible = 0;
    app.WindEnergyCapturedGaugeLabel.Visible = 0;
    app.SolarEnergyCapturedGaugeLabel.Visible = 0;
    app.centermessage.Visible = 0;
    app.TotalenergyinGWhEditField.Visible =0;
    app.TotalenergyinGWhEditFieldLabel.Visible =0;
    app.TimesupLabel.Visible =1;
    %END SOUND
    pause(2)
    app.TimesupLabel.Visible =0;

    app.PresstheButtontoStartLabel.Text = 'Press the Button to Restart!';

    app.greatjobtextbubble.Visible = 1; % end of game results appear
    app.goodjobmoby.Visible = 1;
    app.GreatJobLabel.Visible = 1;
    app.ofyourenergycamefromsolarEditField.Visible = 1;
    app.ofyourenergycamefromwindEditField.Visible = 1;
    app.ofyourenergycamefromnuclearEditField.Visible = 1;
    app.ofyourenergycamefromsolarEditFieldLabel.Visible = 1;
    app.ofyourenergycamefromwindEditFieldLabel.Visible = 1;
    app.ofyourenergycamefromnuclearEditFieldLabel.Visible = 1;

    app.endmessage.Visible = 1;
    if energy > 0
    app.ofyourenergycamefromsolarEditField.Value = 100*total_solar_energy/energy;
    app.ofyourenergycamefromwindEditField.Value = 100*total_wind_energy/energy;
    app.ofyourenergycamefromnuclearEditField.Value = 100*total_nuclear_energy/energy;
    else
    app.ofyourenergycamefromsolarEditField.Value = 0;
    app.ofyourenergycamefromwindEditField.Value = 0;
    app.ofyourenergycamefromnuclearEditField.Value = 0;

    end


app.TotalenergyinGWhEditField.Value = energy; % displays total energy

pause(15); %allows the user to read their results
```

```
%resets to original screen after this pause
app.StartButton.Visible = 1;
app.all3characters.Visible = 1;
app.startmoby.Visible = 1;
app.PresstheButtontoStartLabel.Visible = 1;
app.timnmoby.Visible = 1;

    app.UraniumPiecesCollectedGauge.Visible = 0;
    app.WindEnergyCapturedGauge.Visible = 0;
    app.SolarEnergyCapturedGauge.Visible = 0;
    app.UraniumPiecesCollectedGaugeLabel.Visible = 0;
    app.WindEnergyCapturedGaugeLabel.Visible = 0;
    app.SolarEnergyCapturedGaugeLabel.Visible = 0;
    app.centermessage.Visible = 0;
    app.annie.Visible = 0;
    app.TimerGauge.Visible = 0;
    app.TimerGaugeLabel.Visible = 0;


    app.ofyourenergycamefromsolarEditFieldLabel.Visible = 0;
    app.ofyourenergycamefromwindEditFieldLabel.Visible = 0;
    app.ofyourenergycamefromnuclearEditFieldLabel.Visible = 0;
    app.goodjobmoby.Visible = 0;
    app.GreatJobLabel.Visible = 0;
    app.greatjobtextbubble.Visible = 0;
    app.ofyourenergycamefromsolarEditField.Visible = 0;
    app.ofyourenergycamefromwindEditField.Visible = 0;
    app.ofyourenergycamefromnuclearEditField.Visible = 0;
    app.endmessage.Visible = 0;


    app.TotalenergyinGWhEditField.Value = 0;
    app.WindEnergyCapturedGauge.Value = 0;
    app.SolarEnergyCapturedGauge.Value = 0;
    app.UraniumPiecesCollectedGauge.Value = 0;





    end
  end

  % Component initialization
  methods (Access = private)

    % Create UIFigure and components
```

```
function createComponents(app)

    % Create UIFigure and hide until all components are created
    app.UIFigure = uifigure('Visible', 'off');
    app.UIFigure.Position = [100 100 1300 644];
    app.UIFigure.Name = 'MATLAB App';

    % Create background
    app.background = uiimage(app.UIFigure);
    app.background.Position = [-233 -229 1829 913];
    app.background.ImageSource = 'istockphoto-506611752-170667a.jpg';

    % Create PresstheButtontoStartLabel
    app.PresstheButtontoStartLabel = uilabel(app.UIFigure);
    app.PresstheButtontoStartLabel.HorizontalAlignment = 'center';
    app.PresstheButtontoStartLabel.FontName = 'Comic Sans MS';
    app.PresstheButtontoStartLabel.FontSize = 25;
    app.PresstheButtontoStartLabel.Position = [462 489 381 49];
    app.PresstheButtontoStartLabel.Text = 'Press the Button to Start!';

    % Create StartButton
    app.StartButton = uibutton(app.UIFigure, 'push');
    app.StartButton.ButtonPushedFcn = createCallbackFcn(app, @StartButtonPushed, true);
    app.StartButton.FontName = 'Comic Sans MS';
    app.StartButton.FontSize = 40;
    app.StartButton.Position = [441 176 422 150];
    app.StartButton.Text = 'Start!';

    % Create TimerGaugeLabel
    app.TimerGaugeLabel = uilabel(app.UIFigure);
    app.TimerGaugeLabel.BackgroundColor = [1 1 1];
    app.TimerGaugeLabel.HorizontalAlignment = 'center';
    app.TimerGaugeLabel.FontName = 'Comic Sans MS';
    app.TimerGaugeLabel.FontSize = 20;
    app.TimerGaugeLabel.Visible = 'off';
    app.TimerGaugeLabel.Position = [1127 337 88 39];
    app.TimerGaugeLabel.Text = 'Timer';

    % Create TimerGauge
    app.TimerGauge = uigauge(app.UIFigure, 'circular');
    app.TimerGauge.Limits = [0 60];
    app.TimerGauge.MajorTicks = [0 10 20 30 40 50 60];
    app.TimerGauge.MajorTickLabels = {'0', '10', '20', '30', '40', '50', '60'};
    app.TimerGauge.MinorTicks = [0 2 4 6 8 10 12 14 16 18 20 22 24 26 28 30 32 34 36 38 40 42 44 46 48 50 52 54 56 58 60];
    app.TimerGauge.Visible = 'off';
    app.TimerGauge.Position = [1049 390 244 244];

    % Create all3characters
```

```
app.all3characters = uiimage(app.UIFigure);
app.all3characters.Position = [0 -19 761 209];
app.all3characters.ImageSource = 'clipart_annie-moby-tim2-removebg-preview.png';

% Create startmoby
app.startmoby = uiimage(app.UIFigure);
app.startmoby.Position = [523 287 258 160];
app.startmoby.ImageSource = 'animated_moby_look.8ce26a9.png';

% Create timnmoby
app.timnmoby = uiimage(app.UIFigure);
app.timnmoby.Position = [-142 272 561 391];
app.timnmoby.ImageSource = '232-2328975_tim-and-moby-removebg-preview.png';

% Create annie
app.annie = uiimage(app.UIFigure);
app.annie.Visible = 'off';
app.annie.Position = [796 303 404 363];
app.annie.ImageSource = 'Annie.png';

% Create TotalenergyinGWhEditFieldLabel
app.TotalenergyinGWhEditFieldLabel = uilabel(app.UIFigure);
app.TotalenergyinGWhEditFieldLabel.BackgroundColor = [1 1 1];
app.TotalenergyinGWhEditFieldLabel.HorizontalAlignment = 'center';
app.TotalenergyinGWhEditFieldLabel.FontName = 'Comic Sans MS';
app.TotalenergyinGWhEditFieldLabel.FontSize = 25;
app.TotalenergyinGWhEditFieldLabel.Visible = 'off';
app.TotalenergyinGWhEditFieldLabel.Position = [500 130 263 38];
app.TotalenergyinGWhEditFieldLabel.Text = 'Total energy in GWh: ';

% Create TotalenergyinGWhEditField
app.TotalenergyinGWhEditField = uieditfield(app.UIFigure, 'numeric');
app.TotalenergyinGWhEditField.HorizontalAlignment = 'center';
app.TotalenergyinGWhEditField.FontName = 'Comic Sans MS';
app.TotalenergyinGWhEditField.FontSize = 25;
app.TotalenergyinGWhEditField.Visible = 'off';
app.TotalenergyinGWhEditField.Position = [762 131 43 37];

% Create greatjobtextbubble
app.greatjobtextbubble = uiimage(app.UIFigure);
app.greatjobtextbubble.Visible = 'off';
app.greatjobtextbubble.Position = [1037 131 245 193];
app.greatjobtextbubble.ImageSource = 'words-clipart-kid-13.png';

% Create goodjobmoby
app.goodjobmoby = uiimage(app.UIFigure);
app.goodjobmoby.Visible = 'off';
app.goodjobmoby.Position = [795 -88 380 320];
```

```
app.goodjobmoby.ImageSource = 'tumblr_ortn2kowvi1vgr0mso1_400-removebg-preview (1).png';

% Create GreatJobLabel
app.GreatJobLabel = uilabel(app.UIFigure);
app.GreatJobLabel.FontName = 'Comic Sans MS';
app.GreatJobLabel.FontSize = 20;
app.GreatJobLabel.Visible = 'off';
app.GreatJobLabel.Position = [1102 243 106 31];
app.GreatJobLabel.Text = 'Great Job!';

% Create UraniumPiecesCollectedGaugeLabel
app.UraniumPiecesCollectedGaugeLabel = uilabel(app.UIFigure);
app.UraniumPiecesCollectedGaugeLabel.BackgroundColor = [1 1 1];
app.UraniumPiecesCollectedGaugeLabel.HorizontalAlignment = 'center';
app.UraniumPiecesCollectedGaugeLabel.FontName = 'Comic Sans MS';
app.UraniumPiecesCollectedGaugeLabel.FontSize = 25;
app.UraniumPiecesCollectedGaugeLabel.Visible = 'off';
app.UraniumPiecesCollectedGaugeLabel.Position = [58 366 315 48];
app.UraniumPiecesCollectedGaugeLabel.Text = 'Uranium Pieces Collected';

% Create UraniumPiecesCollectedGauge
app.UraniumPiecesCollectedGauge = uigauge(app.UIFigure, 'linear');
app.UraniumPiecesCollectedGauge.Limits = [0 20];
app.UraniumPiecesCollectedGauge.MajorTicks = [0 10 20];
app.UraniumPiecesCollectedGauge.MajorTickLabels = {'None', 'Half Capacity', 'Full', ''};
app.UraniumPiecesCollectedGauge.MinorTicks = [];
app.UraniumPiecesCollectedGauge.Visible = 'off';
app.UraniumPiecesCollectedGauge.FontSize = 25;
app.UraniumPiecesCollectedGauge.Position = [383 361 558 65];

% Create WindEnergyCapturedGaugeLabel
app.WindEnergyCapturedGaugeLabel = uilabel(app.UIFigure);
app.WindEnergyCapturedGaugeLabel.BackgroundColor = [1 1 1];
app.WindEnergyCapturedGaugeLabel.HorizontalAlignment = 'center';
app.WindEnergyCapturedGaugeLabel.FontName = 'Comic Sans MS';
app.WindEnergyCapturedGaugeLabel.FontSize = 25;
app.WindEnergyCapturedGaugeLabel.Visible = 'off';
app.WindEnergyCapturedGaugeLabel.Position = [65 279 285 48];
app.WindEnergyCapturedGaugeLabel.Text = 'Wind Energy Captured';

% Create WindEnergyCapturedGauge
app.WindEnergyCapturedGauge = uigauge(app.UIFigure, 'linear');
app.WindEnergyCapturedGauge.Limits = [0 40];
app.WindEnergyCapturedGauge.MajorTicks = [0 20 40];
app.WindEnergyCapturedGauge.MajorTickLabels = {'None', 'Half Capacity', 'Full', ''};
app.WindEnergyCapturedGauge.MinorTicks = [];
app.WindEnergyCapturedGauge.Visible = 'off';
app.WindEnergyCapturedGauge.FontSize = 25;
```

```
app.WindEnergyCapturedGauge.Position = [382 272 558 65];

% Create SolarEnergyCapturedGaugeLabel
app.SolarEnergyCapturedGaugeLabel = uilabel(app.UIFigure);
app.SolarEnergyCapturedGaugeLabel.BackgroundColor = [1 1 1];
app.SolarEnergyCapturedGaugeLabel.HorizontalAlignment = 'center';
app.SolarEnergyCapturedGaugeLabel.FontName = 'Comic Sans MS';
app.SolarEnergyCapturedGaugeLabel.FontSize = 25;
app.SolarEnergyCapturedGaugeLabel.Visible = 'off';
app.SolarEnergyCapturedGaugeLabel.Position = [64 194 287 48];
app.SolarEnergyCapturedGaugeLabel.Text = 'Solar Energy Captured';

% Create SolarEnergyCapturedGauge
app.SolarEnergyCapturedGauge = uigauge(app.UIFigure, 'linear');
app.SolarEnergyCapturedGauge.Limits = [0 40];
app.SolarEnergyCapturedGauge.MajorTicks = [0 20 40];
app.SolarEnergyCapturedGauge.MajorTickLabels = {'None', 'Half Capacity', 'Full', ''};
app.SolarEnergyCapturedGauge.MinorTicks = [];
app.SolarEnergyCapturedGauge.Visible = 'off';
app.SolarEnergyCapturedGauge.FontSize = 25;
app.SolarEnergyCapturedGauge.Position = [382 187 559 65];

% Create ofyourenergycamefromnuclearEditFieldLabel
app.ofyourenergycamefromnuclearEditFieldLabel = uilabel(app.UIFigure);
app.ofyourenergycamefromnuclearEditFieldLabel.BackgroundColor = [1 1 1];
app.ofyourenergycamefromnuclearEditFieldLabel.FontName = 'Comic Sans MS';
app.ofyourenergycamefromnuclearEditFieldLabel.FontSize = 25;
app.ofyourenergycamefromnuclearEditFieldLabel.Visible = 'off';
app.ofyourenergycamefromnuclearEditFieldLabel.Position = [487 424 435 38];
app.ofyourenergycamefromnuclearEditFieldLabel.Text = '% of your energy came from nuclear';

% Create ofyourenergycamefromnuclearEditField
app.ofyourenergycamefromnuclearEditField = uieditfield(app.UIFigure, 'numeric');
app.ofyourenergycamefromnuclearEditField.FontSize = 25;
app.ofyourenergycamefromnuclearEditField.Visible = 'off';
app.ofyourenergycamefromnuclearEditField.Position = [417 425 71 37];

% Create ofyourenergycamefromwindEditFieldLabel
app.ofyourenergycamefromwindEditFieldLabel = uilabel(app.UIFigure);
app.ofyourenergycamefromwindEditFieldLabel.BackgroundColor = [1 1 1];
app.ofyourenergycamefromwindEditFieldLabel.FontName = 'Comic Sans MS';
app.ofyourenergycamefromwindEditFieldLabel.FontSize = 25;
app.ofyourenergycamefromwindEditFieldLabel.Visible = 'off';
app.ofyourenergycamefromwindEditFieldLabel.Position = [488 370 401 38];
app.ofyourenergycamefromwindEditFieldLabel.Text = '% of your energy came from wind';

% Create ofyourenergycamefromwindEditField
app.ofyourenergycamefromwindEditField = uieditfield(app.UIFigure, 'numeric');
```

```
app.ofyourenergycamefromwindEditField.FontSize = 25;
app.ofyourenergycamefromwindEditField.Visible = 'off';
app.ofyourenergycamefromwindEditField.Position = [417 371 71 37];

% Create ofyourenergycamefromsolarEditFieldLabel
app.ofyourenergycamefromsolarEditFieldLabel = uilabel(app.UIFigure);
app.ofyourenergycamefromsolarEditFieldLabel.BackgroundColor = [1 1 1];
app.ofyourenergycamefromsolarEditFieldLabel.FontName = 'Comic Sans MS';
app.ofyourenergycamefromsolarEditFieldLabel.FontSize = 25;
app.ofyourenergycamefromsolarEditFieldLabel.Visible = 'off';
app.ofyourenergycamefromsolarEditFieldLabel.Position = [487 313 407 38];
app.ofyourenergycamefromsolarEditFieldLabel.Text = '% of your energy came from solar';

% Create ofyourenergycamefromsolarEditField
app.ofyourenergycamefromsolarEditField = uieditfield(app.UIFigure, 'numeric');
app.ofyourenergycamefromsolarEditField.FontSize = 25;
app.ofyourenergycamefromsolarEditField.Visible = 'off';
app.ofyourenergycamefromsolarEditField.Position = [417 313 71 37];

% Create centermessage
app.centermessage = uilabel(app.UIFigure);
app.centermessage.HorizontalAlignment = 'center';
app.centermessage.VerticalAlignment = 'top';
app.centermessage.WordWrap = 'on';
app.centermessage.FontName = 'Comic Sans MS';
app.centermessage.FontSize = 40;
app.centermessage.Visible = 'off';
app.centermessage.Position = [74 105 1155 210];
    app.centermessage.Text = 'You will have 1 Minute to generate as much power as possible. Hint : One type of energy is more effiecient than the others!!!';

% Create endmessage
app.endmessage = uilabel(app.UIFigure);
app.endmessage.HorizontalAlignment = 'center';
app.endmessage.WordWrap = 'on';
app.endmessage.FontName = 'Comic Sans MS';
app.endmessage.FontSize = 20;
app.endmessage.Visible = 'off';
app.endmessage.Position = [299 148 540 140];
 app.endmessage.Text = 'Can you guess which type of energy is the most efficient?    Try again and see if you can generate more energy using that one!';

% Create solarmessage
app.solarmessage = uilabel(app.UIFigure);
app.solarmessage.BackgroundColor = [0.9294 0.6941 0.1255];
app.solarmessage.HorizontalAlignment = 'center';
app.solarmessage.WordWrap = 'on';
app.solarmessage.FontName = 'Comic Sans MS';
```

```
        app.solarmessage.FontSize = 40;
        app.solarmessage.Visible = 'off';
        app.solarmessage.Position = [287 139 727 241];
        app.solarmessage.Text = 'For Solar, press and hold the button while the sun is shining to capture energy!';

        % Create nucmessage
        app.nucmessage = uilabel(app.UIFigure);
        app.nucmessage.BackgroundColor = [0.7176 0.2745 1];
        app.nucmessage.HorizontalAlignment = 'center';
        app.nucmessage.WordWrap = 'on';
        app.nucmessage.FontName = 'Comic Sans MS';
        app.nucmessage.FontSize = 40;
        app.nucmessage.Visible = 'off';
        app.nucmessage.Position = [287 139 727 241];
        app.nucmessage.Text = 'For Nuclear, use the green handle to move the uranium marbles into the factory to power it!';

        % Create windmessage
        app.windmessage = uilabel(app.UIFigure);
        app.windmessage.BackgroundColor = [0.302 0.7451 0.9333];
        app.windmessage.HorizontalAlignment = 'center';
        app.windmessage.WordWrap = 'on';
        app.windmessage.FontName = 'Comic Sans MS';
        app.windmessage.FontSize = 40;
        app.windmessage.Visible = 'off';
        app.windmessage.Position = [287 139 727 241];
        app.windmessage.Text = 'For wind, use the handle to spin the turbine and generate power!';

        % Create TimesupLabel
        app.TimesupLabel = uilabel(app.UIFigure);
        app.TimesupLabel.HorizontalAlignment = 'center';
        app.TimesupLabel.FontSize = 100;
        app.TimesupLabel.Visible = 'off';
        app.TimesupLabel.Position = [427 216 448 124];
        app.TimesupLabel.Text = {'Times up!'; ''};

        % Show the figure after all components are created
        app.UIFigure.Visible = 'on';
    end
end

% App creation and deletion
methods (Access = public)

    % Construct app
    function app = app_museum_exhibit

        % Create UIFigure and components
        createComponents(app)
```

```
        % Register the app with App Designer
        registerApp(app, app.UIFigure)

        if nargout == 0
            clear app
        end
    end

    % Code that executes before app deletion
    function delete(app)

        % Delete UIFigure when app is deleted
        delete(app.UIFigure)
    end
  end
end
```

GUI

Start screen

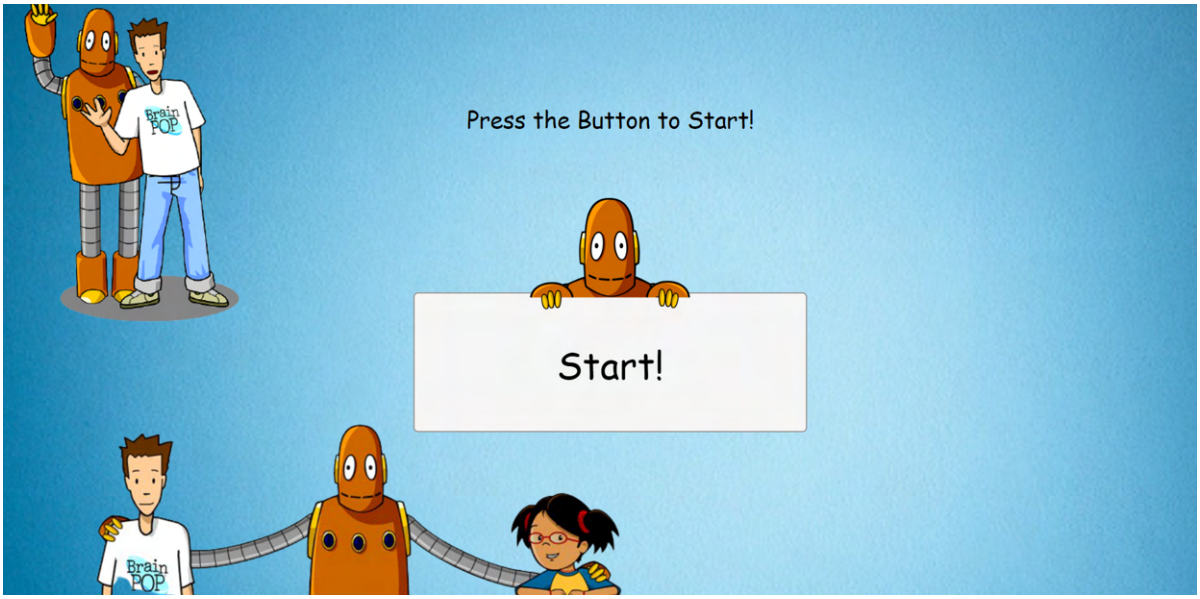

Actively playing screen

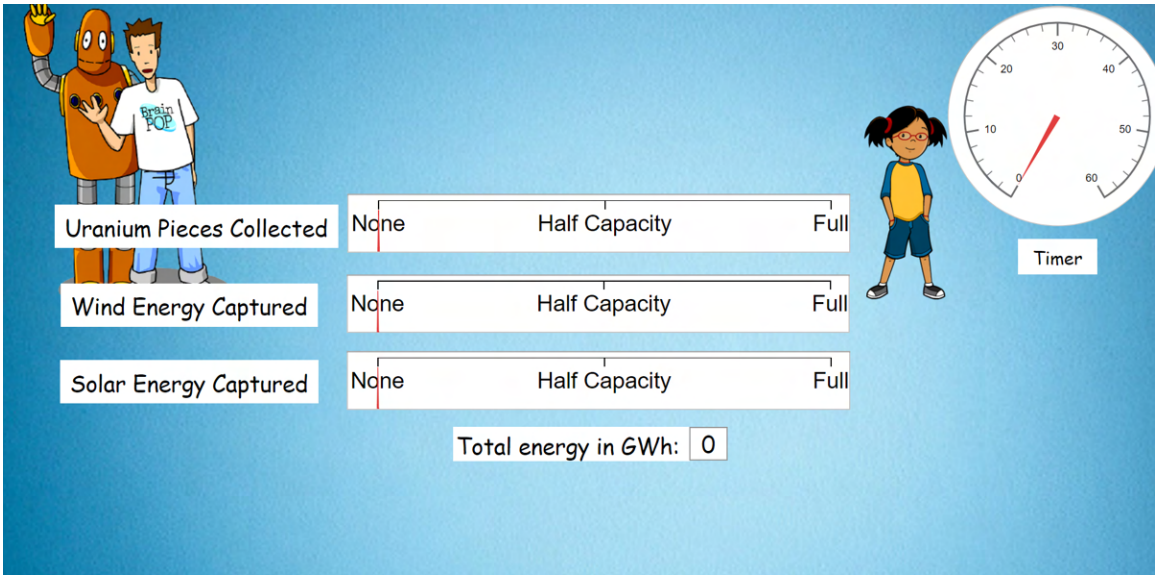

Final screen

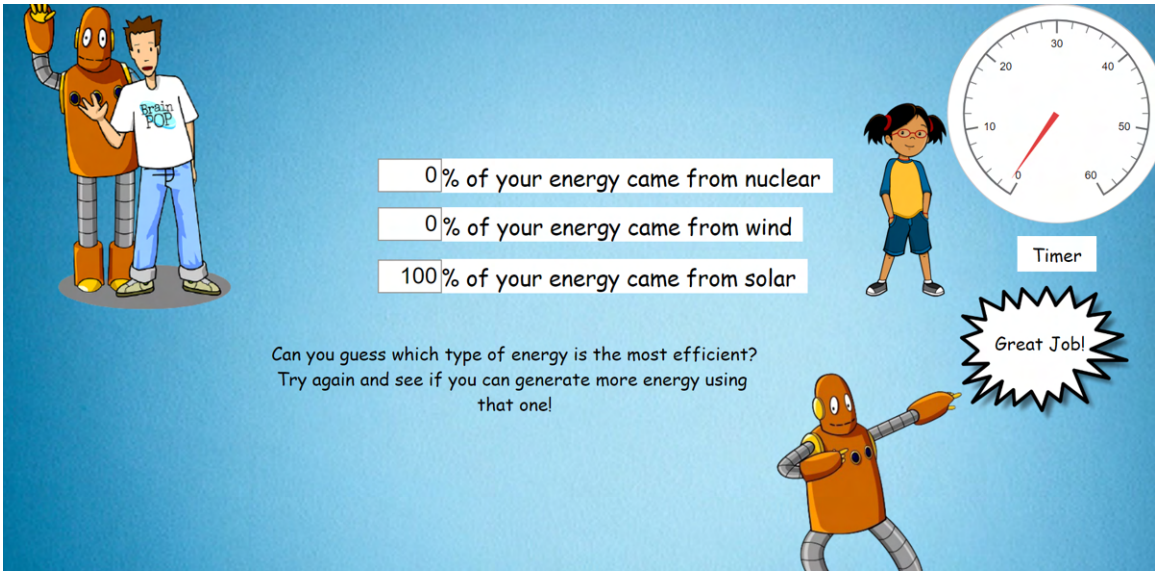

Appendix F – Wire Diagrams for SparkFun Boards

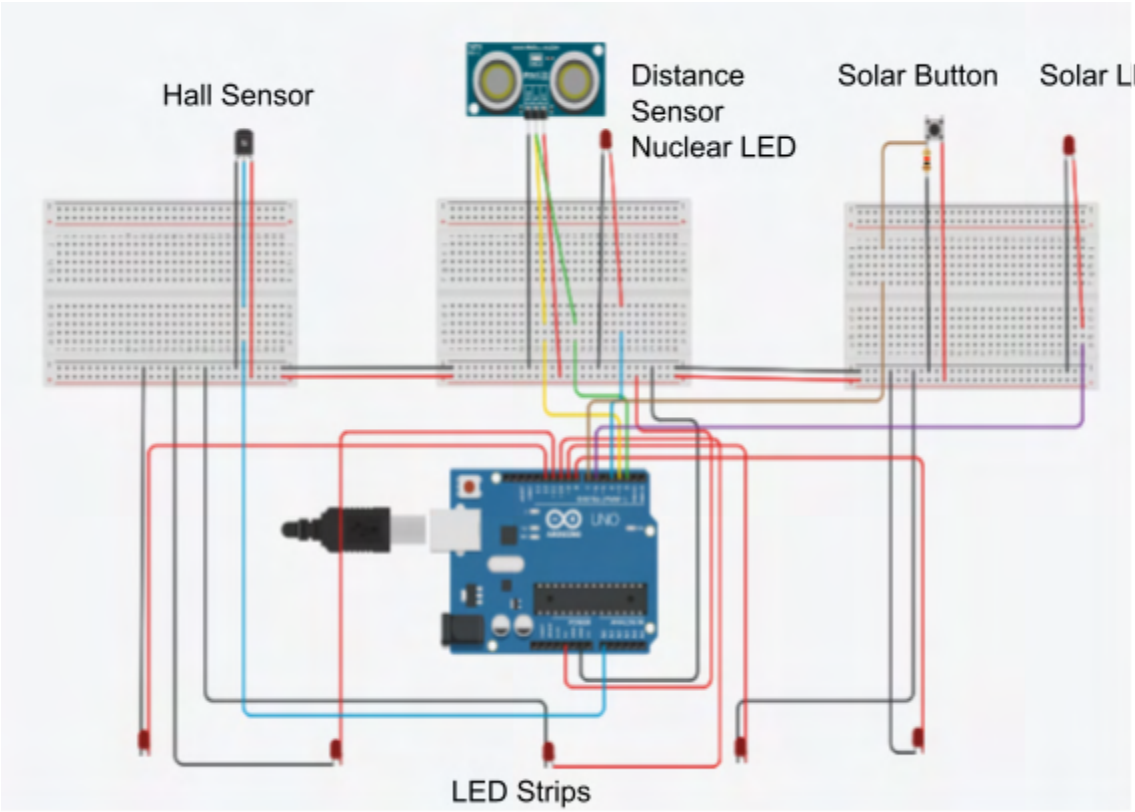

○ Appendix G – Photo Log

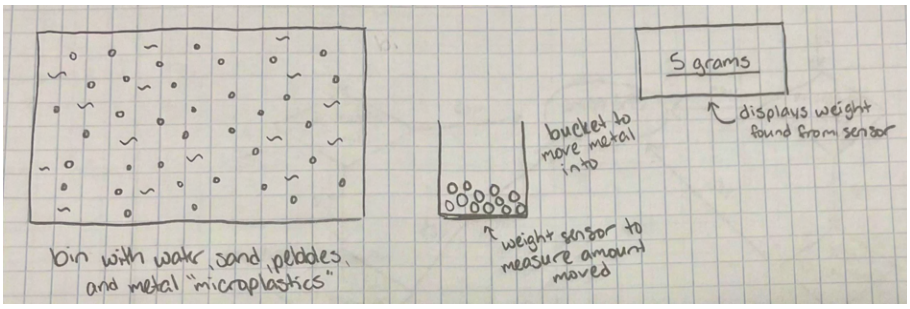

Microplastic Extraction Exhibit Sketch by Lauren Ward

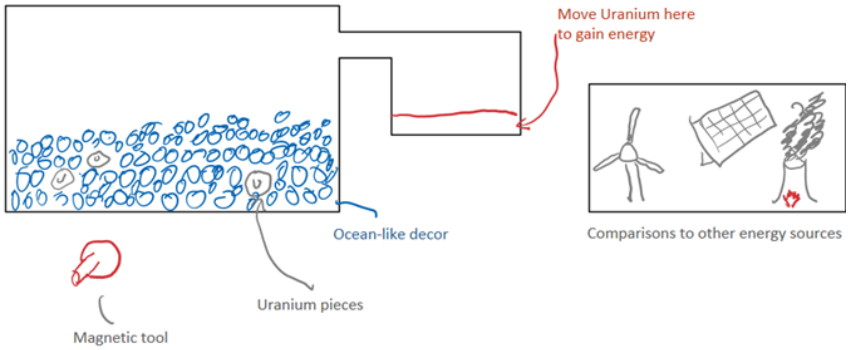

Uranium Seawater Extraction Exhibit Sketch by Nicholas Gorycki

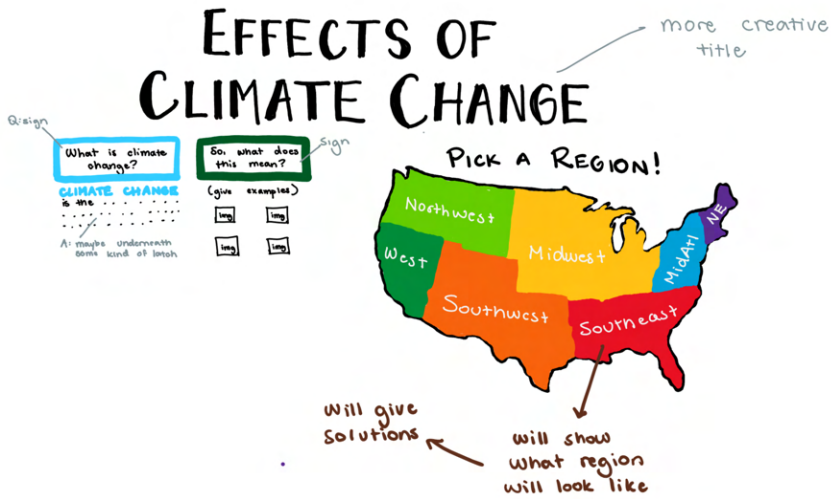

Regional Climate Change Exhibit Sketch by Kathleen Tschoepe

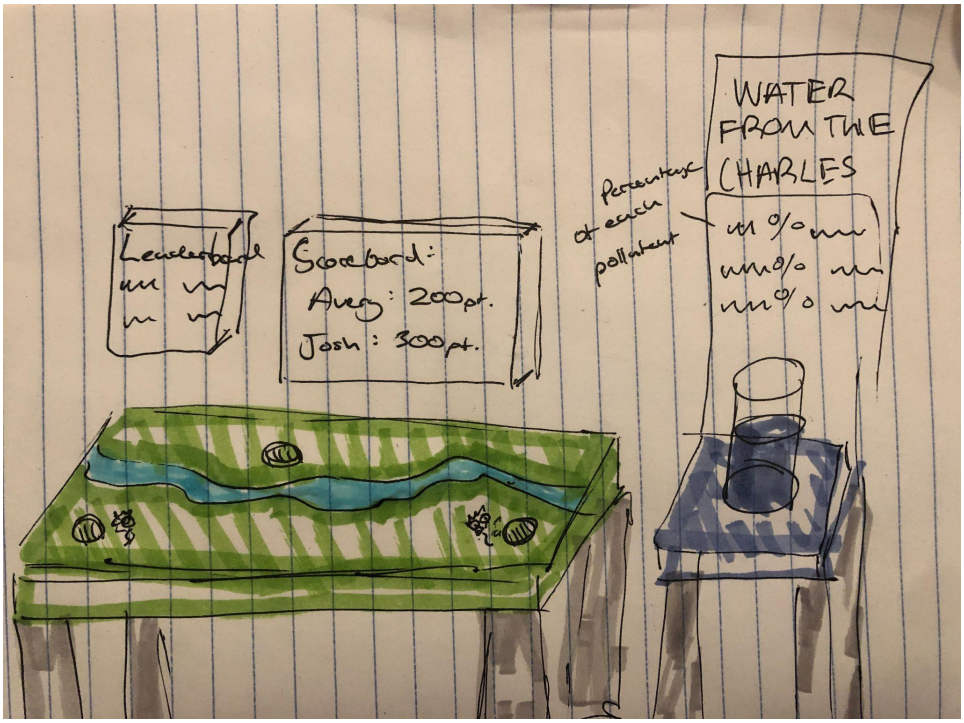

Stormwater Management Exhibit Sketch by Zeynep Ay

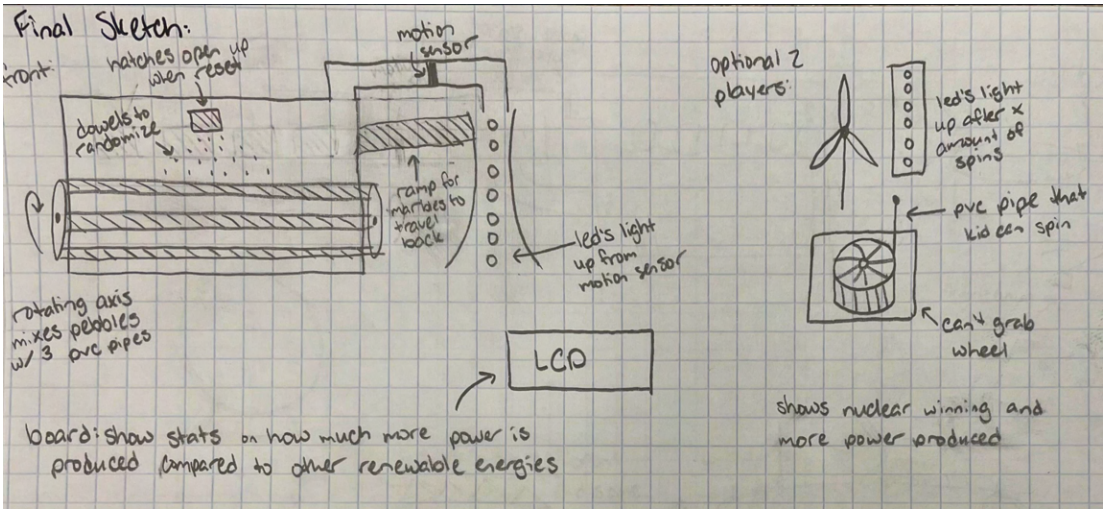

First Iteration of Nuclear Energy Exhibit with Comparison to Wind Energy

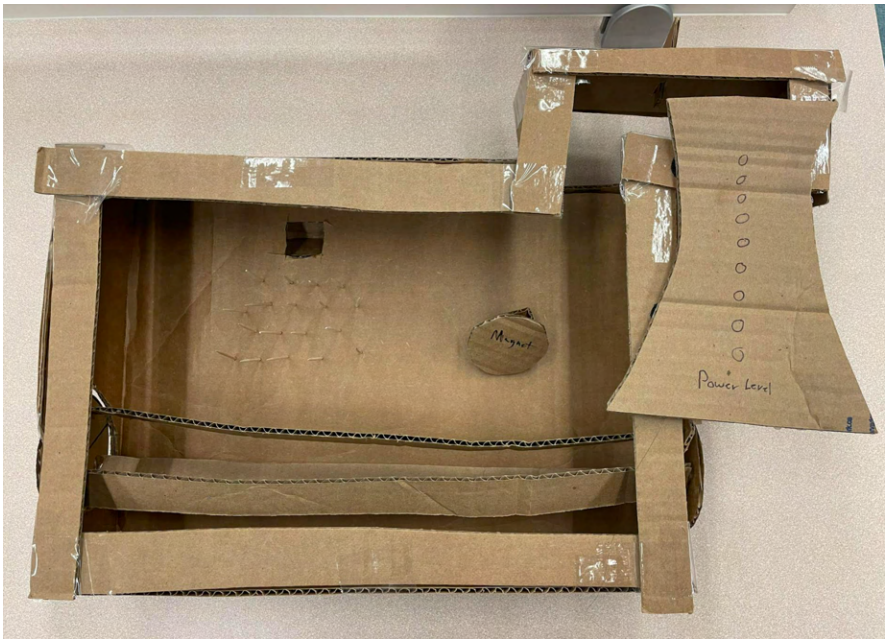

Cardboard Prototype of Nuclear Energy Exhibit

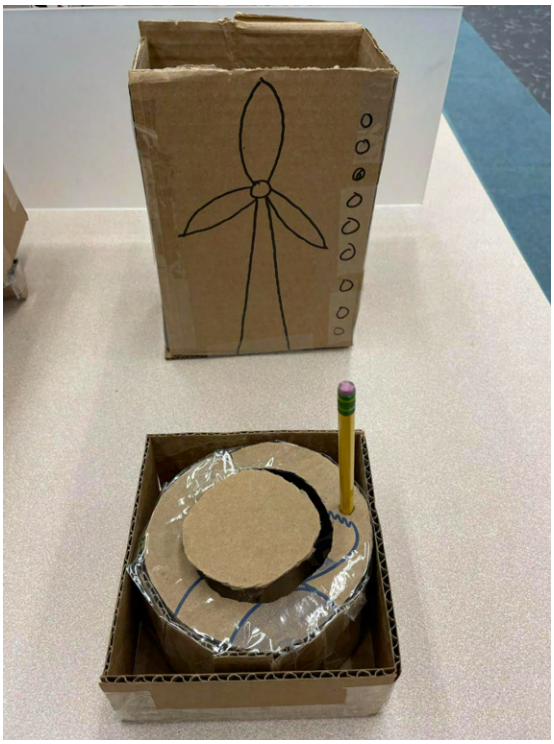

Cardboard Wheel Prototype Simulating Wind Energy Component

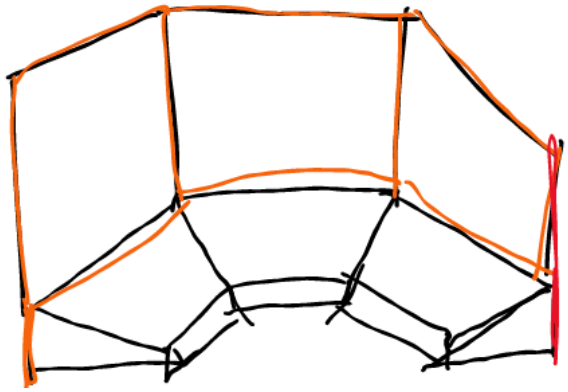

New Sketch of Potential Exhibit Idea by Mentor Carrie Tam

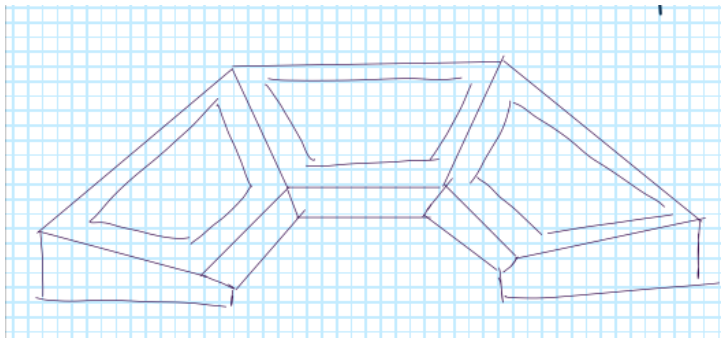

Redrawn Sketch of Three-Component Exhibit

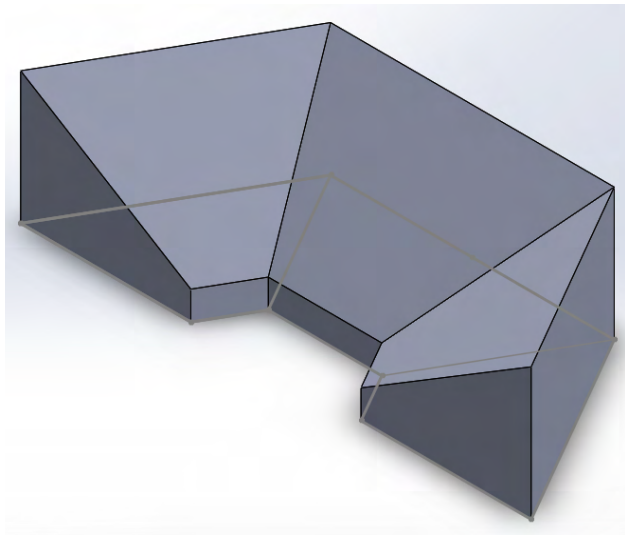

SOLIDWORKS Sketch of Three-Component Exhibit

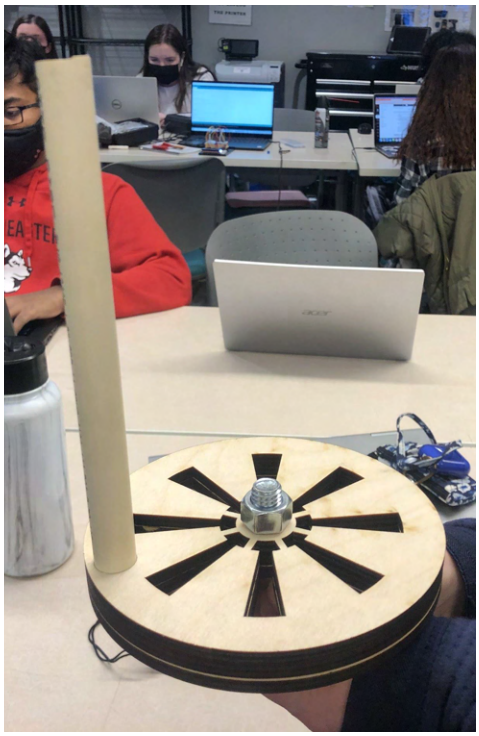

Completed Wheel with PVC Pipe, Nut, and Bolt

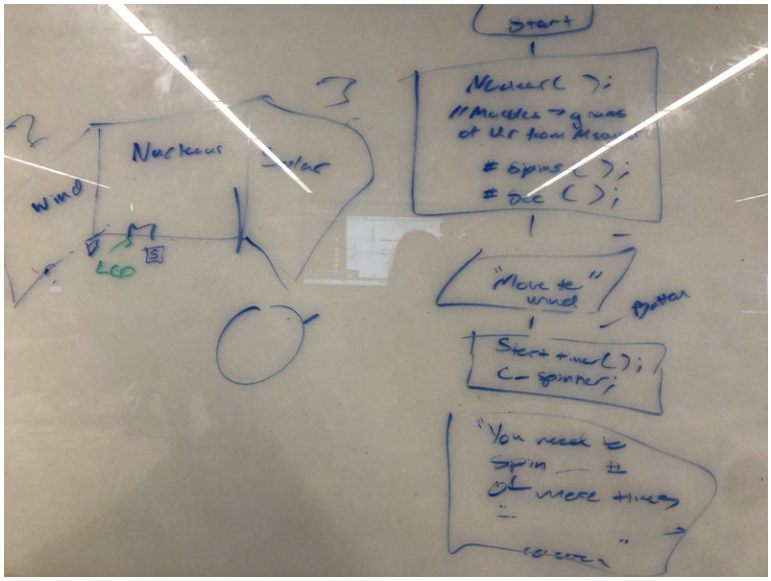

First Coding Flowchart on Whiteboard Wall in Cornerstone Class

○ 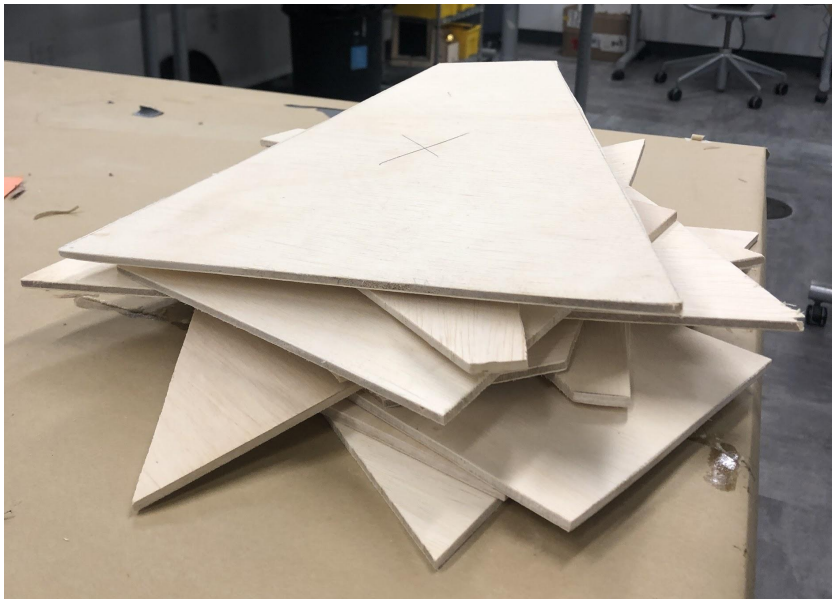

Cut Wood for Trapezoidal Boxes

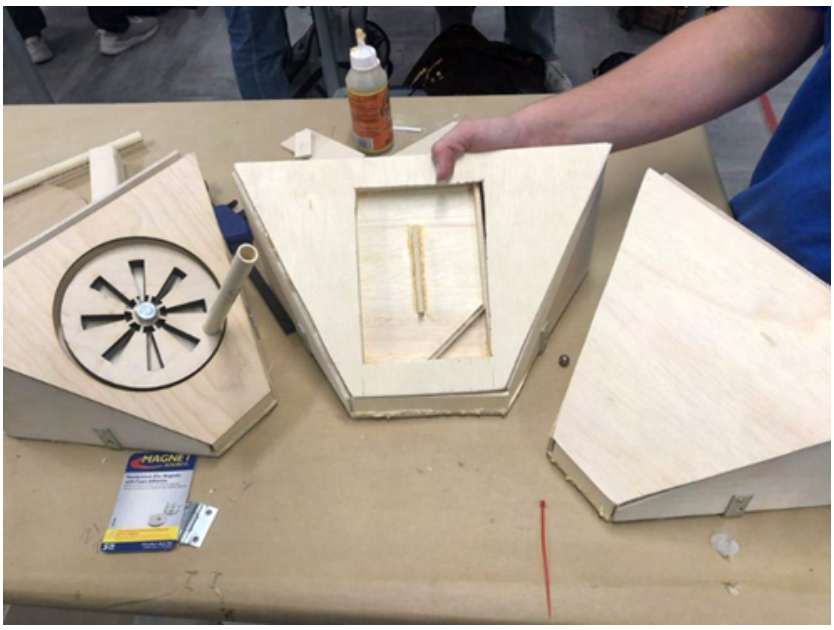

Finished Wood Prototype of Three-Component Exhibit

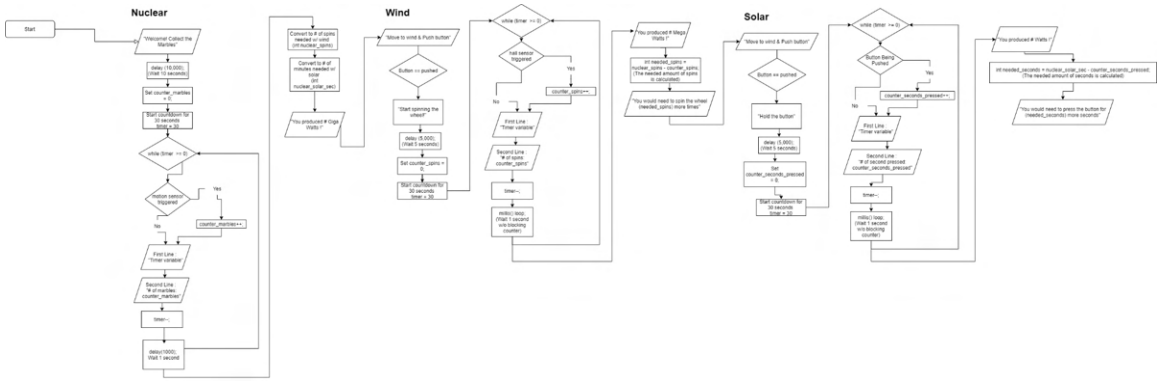

First Complete Coding Flowchart When Exhibit Had Ordered Steps

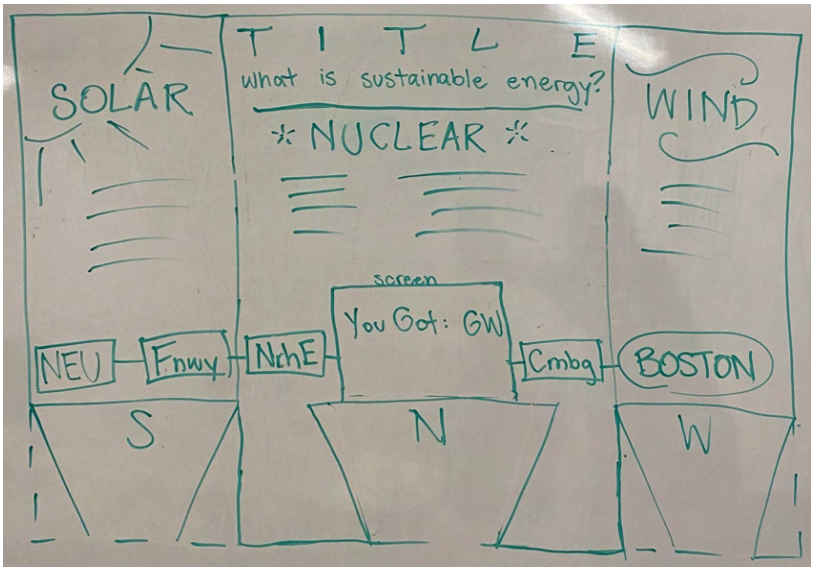

Trifold Sketch on Whiteboard during Mentor Meeting by Kathleen Tschoepe

○ 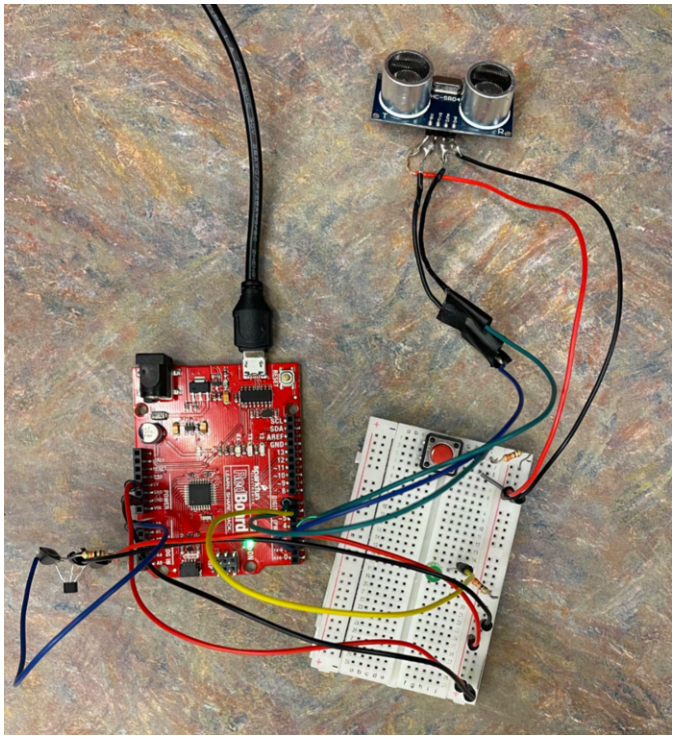

Sparkfun RedBoard, Breadboard, and Wiring Proof of Concept

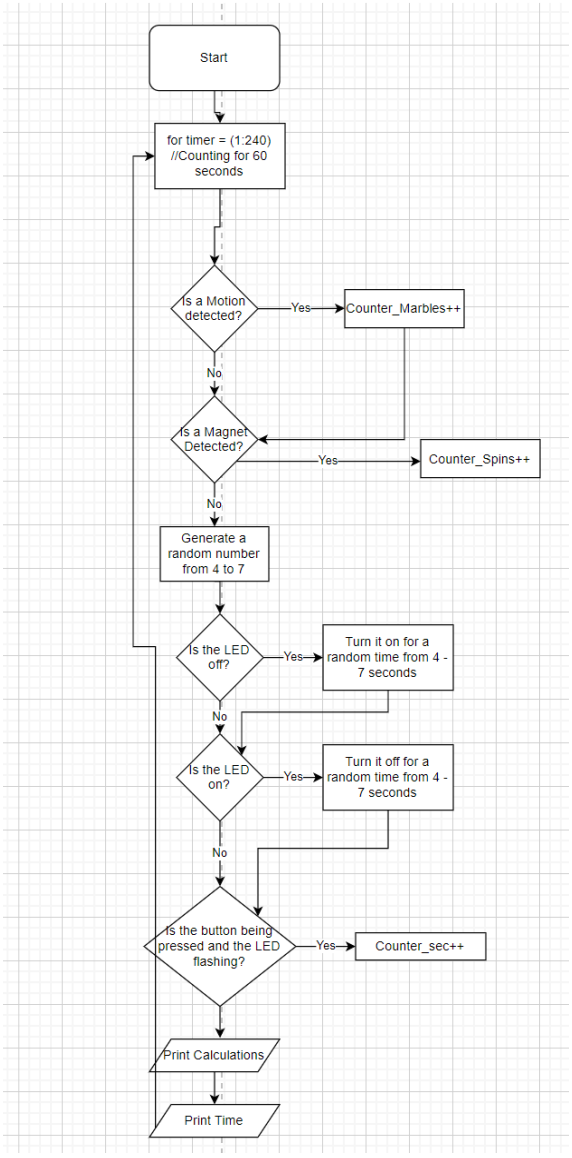

Final Coding Flowchart for Complete Museum Exhibit Project

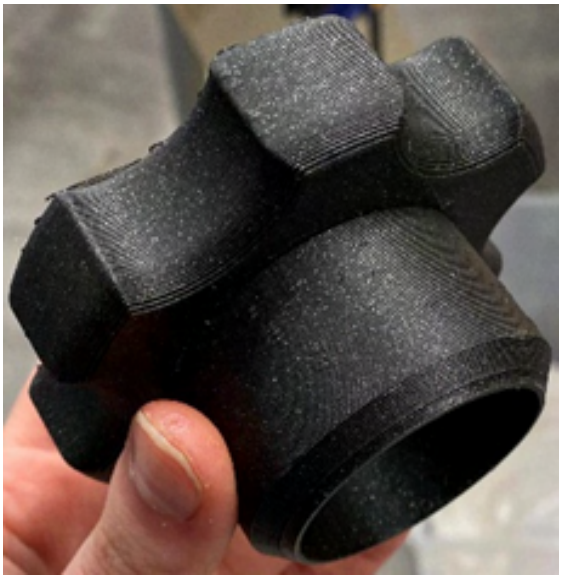

3D-Printed Handle for Wind Energy Component by Kathleen Tschoepe

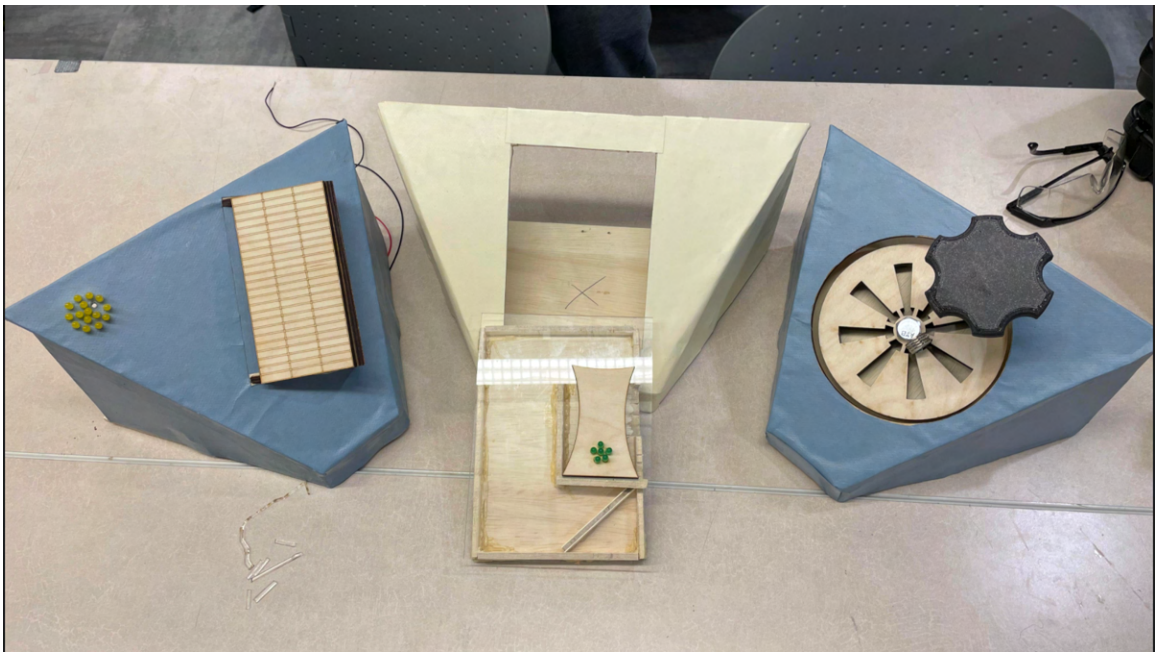

Colored Wood Prototype with Solar Panel, LED Lights, Nuclear Tower, and Clear Acrylic Covering

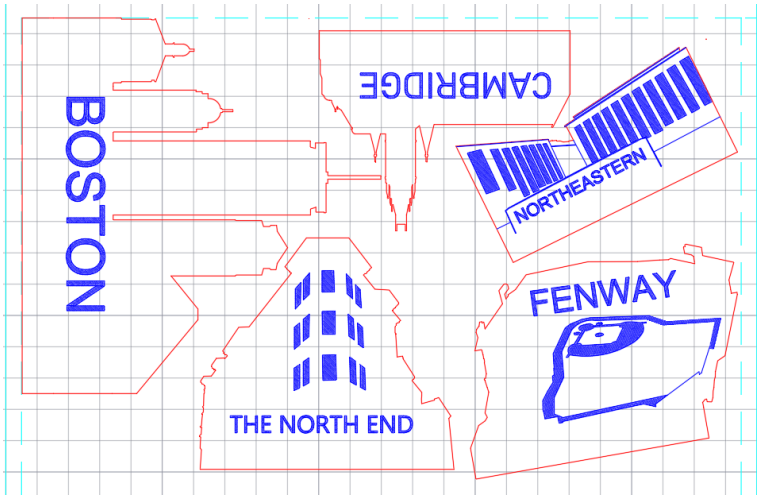

Clear Acrylic Cutouts of Boston Locations for LED Strips on Trifold Poster

Final Purple Nuclear Component of Museum Exhibit with Marbles, Lit LEDs, and Moby Image

Final Blue Wind Component of Museum Exhibit with Silver Wheel and Red Rotation Arrow

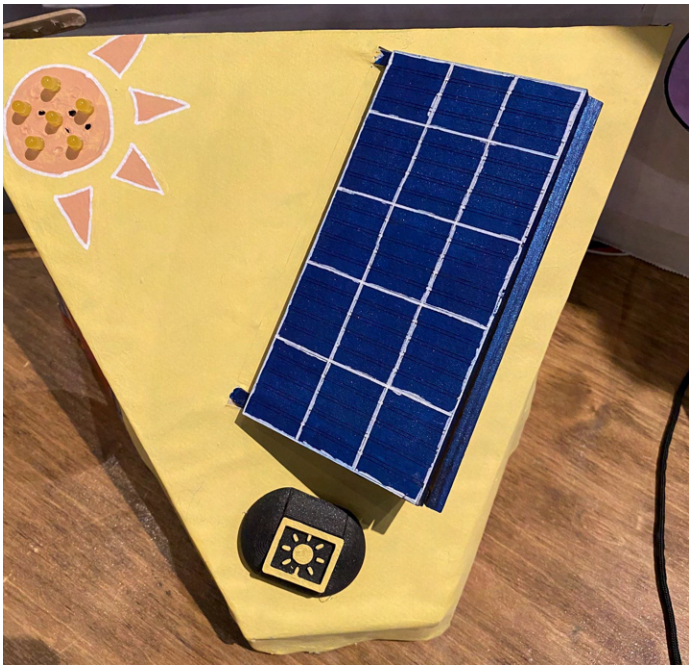

Final Yellow Solar Component of Museum Exhibit with Sun, LEDs, Button, and Blue Solar Panel

○ 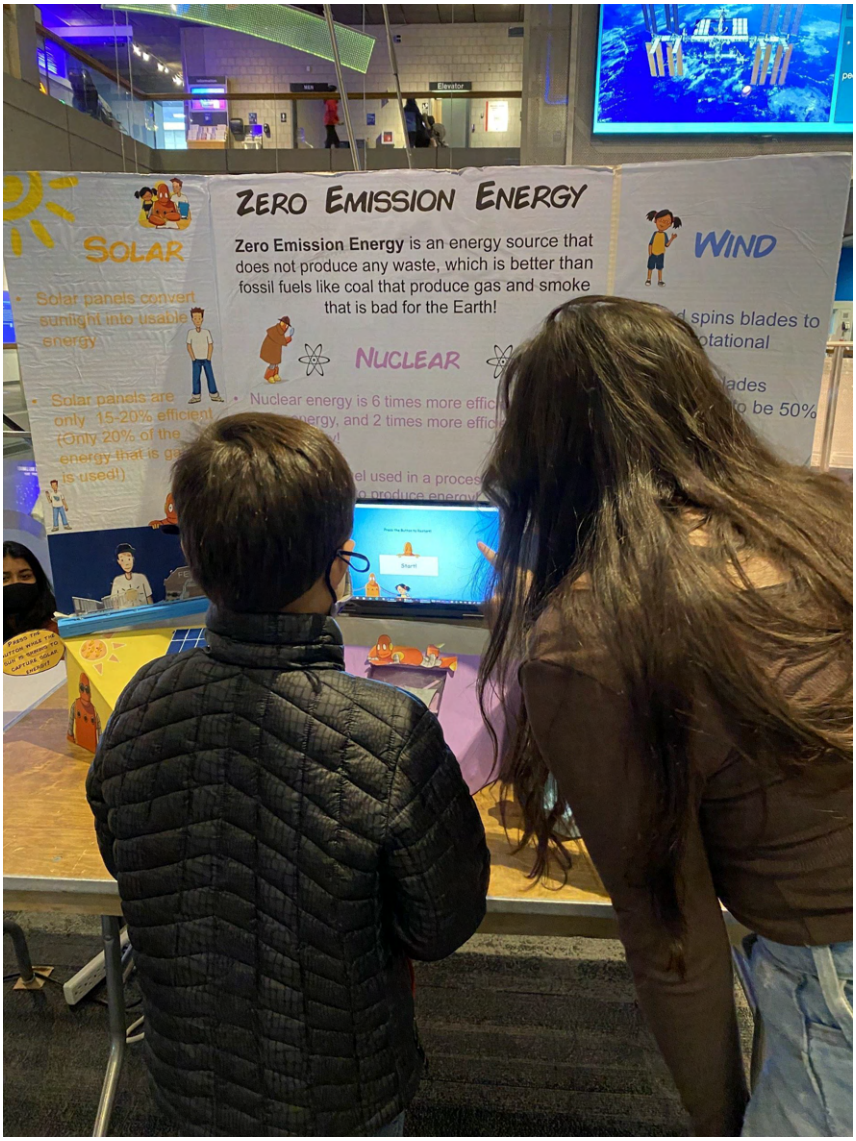

Professor Kathryn Schulte-Grahame's Son Playing with Final Project at the Boston Museum of Science

Complete Final Project at the Boston Museum of Science

- 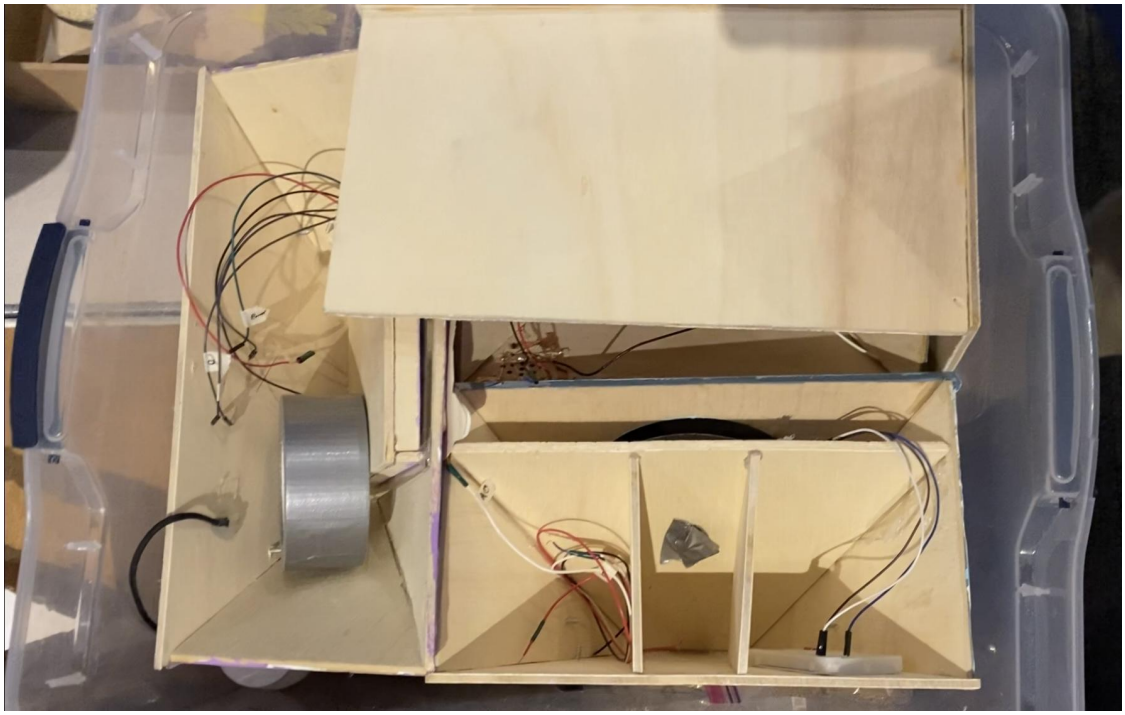

Final Project Components Fitting Inside Transportation Box

○ Appendix H – Final Gantt Chart

P2-Group5

*Will be updated to display each individuals' tasks as they appear

Project Start: Sun, 17-Oct-2021

Task	Assigned to:	Start	End
P2-M1	Kathleen T.	10/17/2021	10/20/2021
KDTA meeting	Team+Peer mentor	10/25/2021	10/25/2021
P2-M2	Nicholas G.	10/20/2021	10/27/2021
Prototyping	Team	10/28/2021	11/1/2021
P2-M3	Lauren W.	10/27/2021	11/3/2021
Pre-construction meeting	Team+Peer mentor	11/4/2021	11/4/2021
P2-M4	Zeynep A.	11/3/2021	11/10/2021
Construction	Team	11/6/2021	11/9/2021
Sparkfun implementation	Nick/Zeynep	11/7/2021	11/9/2021
3D printing/Laser-cutting	Lauren/Katie	11/7/2021	11/9/2021
P2-M5	Team	11/10/2021	11/17/2021
Construction	Nick/Lauren/Katie	11/13/2021	11/16/2021
Wiring and coding	Nick/Zeynep	11/15/2021	11/16/2021
P2-M6	Team	11/17/2021	12/4/2021
Finalization of code/wiring	Nick	11/16/2021	11/29/2021
GUI work	Nick/Zeynep	11/18/2021	12/1/2021
Painting	Lauren	11/24/2021	12/1/2021
Trifold printing/Aesthetics	Katie	11/21/2021	11/30/2021
Final changes	Team	11/27/2021	12/2/2021

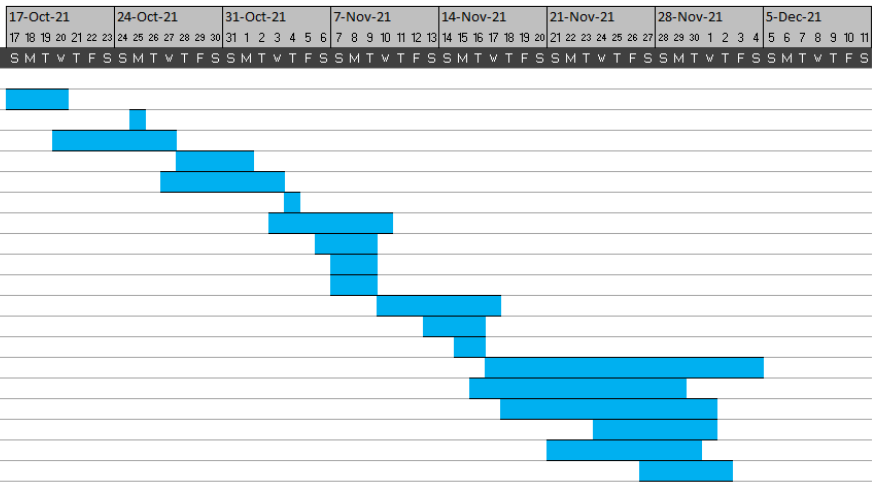

○

○ Appendix I – Final Budget

Item	Unit Value	Units	Quantity	Value	Cost	Source
Wood	$ 4.00	ea	3	$ 12.00	$ 12.00	Hardware Store
Wood Panels	$ 12.38	ea	1	$ 12.38	$ 12.38	Campus Store
Marbles	$ 5.99	ea	1	$ 5.99	$ 5.99	Amazon
Clear Acrylic	$ 9.98	ea	1	$ 9.98	$ 9.98	Campus Store
Magnets	$ 2.99	ea	1	$ 2.99	$ 2.99	Hardware Store
PVC pipes	$ 1.81	ea	1	$ 1.81	$ 1.81	Hardware Store
Mod Podge	$ 7.29	ea	1	$ 7.29	$ 7.29	BLICK
Brushes	$ 0.73	ea	3	$ 2.19	$ 2.19	BLICK
Small Paper	$ 0.80	ea	1	$ 0.80	$ 0.80	BLICK
Large Paper	$ 3.30	ea	3	$ 9.90	$ 9.90	BLICK
Copper Tape	$ 6.98	ea	1	$ 6.98	$ 6.98	Amazon
Hinges	$ 4.99	ea	1	$ 4.99	$ 4.99	Hardware Store
Ball bearing	$ 7.77	ea	1	$ 7.77	$ 7.77	Amazon
Lenovo Yoga 7I	$ 1,800.00	ea	1	$ 1,800.00	$ -	Owned
Wire	$ 0.10	ft	10	$ 1.00	$ -	FYELIC
Paint	$ 3.00	ea	6	$ 18.00	$ -	Owned
LED strip lights	$ 1.00	ft	3	$ 3.00	$ -	Another Group
LEDs	$ 3.30	ea	4	$ 13.20	$ -	SparkFun Kit
Motion Sensor	$ 3.95	ea	1	$ 3.95	$ -	SparkFun Kit
Button	$ 0.25	ea	1	$ 0.25	$ -	SparkFun Kit
Poster Board	$ 2.99	ea	1	$ 2.99	$ -	Owned
Hall Effect Sensor	$ 5.73	ea	1	$ 5.73	$ 5.73	Amazon
Totals:				$ 1,933.19	$ 90.80	