MSTDF: Motion Style Transfer Towards High Visual Fidelity Based on Dynamic Fusion

Ziyun Qian, Dingkang Yang, *Graduate Student Member, IEEE*, Mingcheng Li, Zeyu Xiao, and Lihua Zhang, *Member, IEEE*

***Abstract*—Emotion-guided motion style transfer is a novel research direction, enabling the efficient generation of motion in various emotional styles for use in films, games, and other domains. However, existing methods primarily rely on global feature statistics for motion style transfer, neglecting local semantic structure and resulting in the degradation of motion content structure. This letter proposes a novel Motion Style Transfer based on Dynamic Fusion (MSTDF) framework, which treats content and style motion as distinct signals and employs dynamic fusion for high-fidelity motion style transfer. Additionally, to address the challenge of traditional discriminators capturing subtle motion style features, we propose the Motion Dynamic Fusion (MDF) discriminator to capture the details and fine-grained style characteristics of motion sequences, assisting the generator in producing higher-fidelity stylized motion. Finally, extensive experiments on the Xia dataset demonstrate that our method surpasses state-of-the-art methods in qualitative and quantitative comparisons.**

***Index Terms*—Motion style transfer, dynamic signal fusion, high fidelity.**

I. Introduction

HUMAN motion style is often viewed as a collection of motion attributes, such as emotion [1], [2], [3], [4], [5], [6], [7], personality [8], [9], [10], and behavior [11], [12], [13], [14], reflecting the character's current state. This is widely utilized in fields like gaming, film, and virtual reality to enhance the realism and expressiveness of animated characters. Motion style transfer technology enables rapid switching between different styles of the same motion, significantly increasing the expressiveness of digital humans. This technology inherits motion content (e.g., the jump in Fig. 1(B)) while learning motion style (e.g., the strutting in Fig. 1(A)), resulting in a stylized motion that combines both characteristics (e.g., strutting jump in Fig. 1(C)), as illustrated in Fig. 1.

Recent works [15], [16], [17], [18] in this field draw on image style transfer [19], [20], [21], [22], [23] and other learning-based technologies [24], [25], [26], [27], [28] to achieve motion style transfer. However, most of these methods rely on global feature statistics approaches like AdaIN [29] for style transfer. While such methods can transfer the global mean and variance of style motion into the feature space of content motion, they overlook the local semantic structure of content motion, ultimately leading to the degradation of the motion content structure.

Received 15 October 2024; accepted 12 February 2025. Date of publication 3 March 2025; date of current version 18 March 2025. This work was supported by Shanghai Municipal Science and Technology Major Project under Grant 2021SHZDZX0103. The associate editor coordinating the review of this article and approving it for publication was Dr. Anurag Kumar. *(Corresponding author: Lihua Zhang.)*

The authors are with the Academy for Engineering and Technology, Fudan University, Shanghai 200433, China (e-mail: zyqian22@m.fudan.edu.cn; dkyang20@fudan.edu.cn; mingchengli21@m.fudan.edu.cn; 23210860082@m.fudan.edu.cn; lihuazhang@fudan.edu.cn).

Digital Object Identifier 10.1109/LSP.2025.3546885

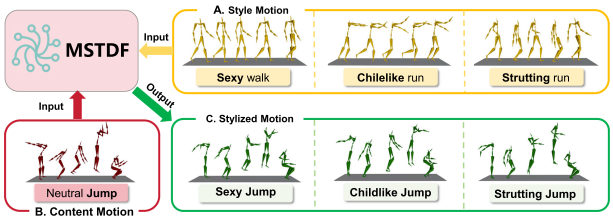

Fig. 1. Illustration of Motion Style Transfer. In the example of generating the stylized motion "strutting jump", the MSTDF framework retains the jumping motion from the neutral jump (left column, B, red) while applying the strutting style (top row, A, yellow). The "strutting jump" (bottom right matrix, C, green) combines the jumping content with the characteristic arms bent backward of the strutting style.

We propose a novel framework called Motion Style Transfer based on Dynamic Fusion (MSTDF) to achieve high-fidelity motion style transfer, as shown in Fig. 2. This framework treats style and content motion as two distinct signals. It aligns their distributions in the feature space for the first time through dynamic fusion, avoiding the degradation of the motion content structure. Moreover, traditional discriminators [15], [16], [17], [30] struggle to capture subtle motion style features, making it difficult for generated stylized motion to reflect the original style accurately. To address this issue, we design a Motion Dynamic Fusion (MDF) discriminator that captures motion sequences' details and style features, assisting the generator in producing higher-fidelity and finer-grained stylized motion. In our experiments, our proposed method achieves superior results to state-of-the-art (SOTA) methods in qualitative and quantitative comparisons.

Our main contributions are as follows:

- We propose a novel framework, MSTDF, which first utilizes dynamic signal fusion for motion style transfer, avoiding the degradation of the local semantic structure.
- We design an MDF discriminator that better captures the fine-grained motion sequences styles, enhancing stylized motion's visual fidelity.
- Extensive experiments confirm the superiority of our framework over SOTA methods.

II. Methodology

The overall framework of the MSTDF framework is illustrated in Fig. 2. This framework achieves motion style transfer

1070-9908 © 2025 IEEE. All rights reserved, including rights for text and data mining, and training of artificial intelligence and similar technologies. Personal use is permitted, but republication/redistribution requires IEEE permission. See https://www.ieee.org/publications/rights/index.html for more information.

Authorized licensed use limited to: Hangzhou Normal University. Downloaded on November 25,2025 at 11:22:05 UTC from IEEE Xplore. Restrictions apply.

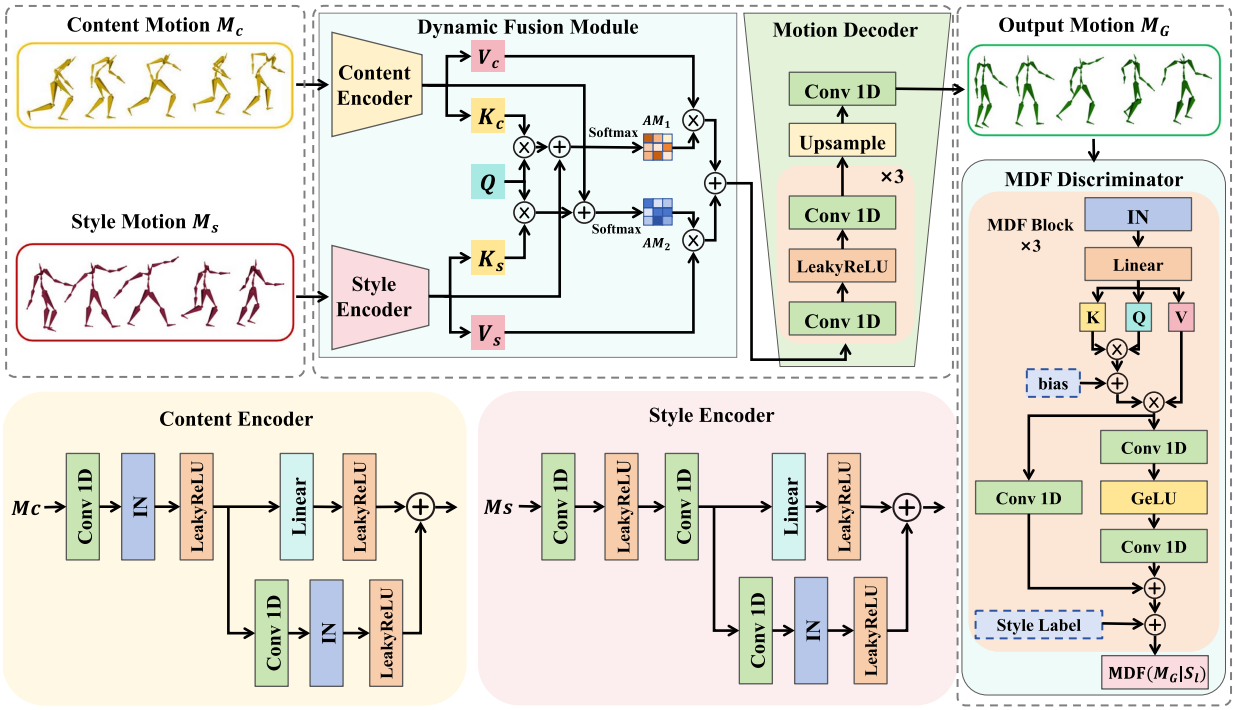

Fig. 2. The MSTDF framework structure includes the content encoder, style encoder, dynamic fusion module, motion decoder, and MDF Discriminator. The symbol $\oplus$ denotes matrix addition, while $\otimes$ denotes matrix multiplication.

through the dynamic fusion module (Section II-A) and the MDF discriminator (Section II-B), utilizing various loss functions to train the model (Section II-C).

A. Dynamic Fusion Module

Several works [15], [16], [17] employ global feature statistics methods like AdaIN [29] for style transfer. While these methods can transfer the global mean and variance of style motion into the feature space of content motion, they overlook the local semantic structure of content motion, ultimately disrupting the motion content structure. Therefore, we propose the MSTDF framework, treating content and style motion as two distinct signals and aligning their feature distributions through dynamic fusion to achieve motion style transfer.

The motion style transfer module serves as the core component of the MSTDF framework. It takes two motion clips as input: $\boldsymbol{M}_c \in \mathbb{R}^{4J\times T}$, with a source style $\boldsymbol{c} \in \boldsymbol{S}$ and style motion $\boldsymbol{M}_s \in \mathbb{R}^{3J\times T}$ with a target style $\boldsymbol{s} \in \boldsymbol{S}$, where $\boldsymbol{S}$ is the set of all styles, T is the number of frames in the motion clip, and $J = 21$ is the number of joints in the human skeleton [15]. The content encoder E_{mc} and style encoder E_{ms} compress the two motion clips $\boldsymbol{M}_c$ and $\boldsymbol{M}_s$ into low-dimensional spaces $\boldsymbol{Z}$, yielding the motion content feature vector $\boldsymbol{Z}_c \in \mathbb{R}^{d\times T_c}$ and the motion style feature vector $\boldsymbol{Z}_s \in \mathbb{R}^{d\times T_s}$.

We design a shared query vector $\boldsymbol{Q} \in \mathbb{R}^{d\times 1}$ and learn $\boldsymbol{K}_s, \boldsymbol{K}_c, \boldsymbol{V}_s, \boldsymbol{V}_c \in \mathbb{R}^{d\times T}$ through linear projection to enable the style and content signals to share feature information, extract more cross-signal relationships, and facilitate the model's learning of a joint representation. The Attention Matrix ($\boldsymbol{AM}$) is computed using the following formula:

$$\boldsymbol{AM}_1 = \mathrm{Softmax}\left(\left(\boldsymbol{Q}^T \otimes \boldsymbol{K}_c\right) \oplus \boldsymbol{Z}_s\right), \tag{1}$$

$$\boldsymbol{AM}_2 = \mathrm{Softmax}\left(\left(\boldsymbol{Q}^T \otimes \boldsymbol{K}_s\right) \oplus \boldsymbol{Z}_c\right), \tag{1}$$

where $\otimes$ denotes matrix multiplication, $\oplus$ represents matrix addition, and Softmax$(\cdot)$ refers to the softmax function. Each row of $\boldsymbol{AM}_1$ and $\boldsymbol{AM}_2$ indicates the importance distribution of content and style motion features across dimensions. The model then dynamically provides optimal fusion weights for content and style motion based on this distribution rather than using a simple linear combination. This method emphasizes key motion features that reflect style characteristics while suppressing redundancy. We compute the attention-weighted mean of the distributions for content and style motion to obtain the final feature map $\boldsymbol{Z}_{fin} \in \mathbb{R}^{d\times 1}$:

$$\boldsymbol{Z}_{fin} = \left(\boldsymbol{V}_c \otimes \boldsymbol{AM}_1^T\right) \oplus \left(\boldsymbol{V}_s \otimes \boldsymbol{AM}_2^T\right), \tag{2}$$

where $\boldsymbol{AM}_1^T, \boldsymbol{AM}_2^T \in \mathbb{R}^{1\times T}$, $\boldsymbol{V}_s, \boldsymbol{V}_c \in \mathbb{R}^{d\times T}$. Finally, the motion decoder F decodes the feature map $\boldsymbol{Z}_{fin} \in \mathbb{R}^{d\times 1}$ to obtain the motion clip $\boldsymbol{M}_G$ after style transfer, further conditioned on the target style label $\boldsymbol{s} \in \boldsymbol{S}$.

In summary, MSTDF achieves style transfer via dynamic fusion. Unlike traditional methods [15], [16], MSTDF focuses on per-point rather than simple global feature statistics, fostering local semantic structure retention of the content motion.

B. Motion Dynamic Fusion (MDF) Discriminator

Traditional discriminators [15], [16], [17], [30] struggle to capture subtle motion style features, making it difficult for generated stylized motion to reflect the original style accurately. To address this issue, we design a Motion Dynamic Fusion (MDF) discriminator that captures motion sequences' details and fine-grained style characteristics, assisting the generator in producing higher-fidelity stylized motion, as shown in Fig. 2.

Authorized licensed use limited to: Hangzhou Normal University. Downloaded on November 25,2025 at 11:22:05 UTC from IEEE Xplore. Restrictions apply.

Specifically, the MDF discriminator is composed of a stack of MDF blocks, and its output can be represented as:

$$\boldsymbol{MDF}\left(\boldsymbol{M}_G \mid \boldsymbol{S}_l\right)=\prod_i^N \boldsymbol{MDF}_i\left(\boldsymbol{M}_G\right), \tag{3}$$

where $\boldsymbol{MDF}_i$ denotes the i-th MDF block, $\boldsymbol{M}_G$ is its input, and $\boldsymbol{S}_l$ is the style label. $\prod_i^N$ denotes the consecutive application of blocks for N iterations, and in our implementation, $N=3$. The MDF block structure is detailed as follows:

$$\begin{aligned}\boldsymbol{m}_i &= \Phi\left(\mathrm{LN}\left(\mathrm{IN}\left(\boldsymbol{M}_G\right)\right)\right),\\ \Phi &= \mathrm{Softmax}\left(\frac{\boldsymbol{Q}\otimes\boldsymbol{K}^T}{\sqrt{\boldsymbol{d}}}+\boldsymbol{b}\right)\otimes\boldsymbol{V},\end{aligned} \tag{4}$$

where $\boldsymbol{m}_{i|i>0}$ represents intermediate features of MDF blocks, $\mathrm{IN}(\cdot)$ denotes the Instance Norm layer, $\mathrm{LN}(\cdot)$ indicates the linear layer, $\boldsymbol{Q}$, $\boldsymbol{K}$, and $\boldsymbol{V}$ are the query, key, and values learned through linear projection, $\boldsymbol{d}$ is the dimension of the key vector, and $\boldsymbol{b}$ is the parameterized attention bias as position encodings. Based on this, we design a motion style enhancement module to extract fine-grained features of the motion clip further while mitigating gradient vanishing in deep networks:

$$\boldsymbol{m}_{i+1}=\boldsymbol{u}\left(\boldsymbol{Ge}\left(\boldsymbol{u}\left(\boldsymbol{m}_i\right)\right)\right)+\boldsymbol{u}\left(\boldsymbol{m}_i\right), \tag{5}$$

i where $\boldsymbol{u}(\cdot)$ denotes the convolution layer, and $\boldsymbol{Ge}(\cdot)$ is the GeLU activation function. $\boldsymbol{m}_{i+1}$ is then concatenated with style label $\boldsymbol{S}_l \in \boldsymbol{S}$ to obtain the MDF discriminator output:

$$\boldsymbol{MDF}\left(\boldsymbol{M}_G \mid \boldsymbol{S}_l\right)=\mathrm{Concat}\left(\boldsymbol{m}_{i+1}, \boldsymbol{S}_l\right). \tag{6}$$

C. Training Objectives

Given the content motion $\boldsymbol{M}_c \in \mathbb{R}^{4\,J\times T}$ and style motion $\boldsymbol{M}_S \in \mathbb{R}^{3\,J\times T}$, $\boldsymbol{s}\in\boldsymbol{S}$, we train the model using the approach analogous to GAN [30]:

Reconstruction Loss: Given the input style motion $\boldsymbol{M}_S \in \mathbb{R}^{3\,J\times T}$ and the generated motion $\boldsymbol{M}_G \in \mathbb{R}^{d'\times T}$ by the motion style transfer module, we calculate the L1 norm to measure the extent of content loss quantitatively:

$$\mathcal{L}_{\text{rec}}=\left\|\boldsymbol{M}_G-\boldsymbol{M}_s\right\|_1. \tag{7}$$

Adversarial Loss: The MDF discriminator and the generator engage in mutual adversarial training to complete the entire training process:

$$\mathcal{L}_{\text{adv}}=\left\|\boldsymbol{D}_s\left(\boldsymbol{M}_s \mid \boldsymbol{S}\right)-1\right\|^2+\left\|\boldsymbol{D}_s\left(\boldsymbol{M}_G \mid \boldsymbol{S}_l\right)\right\|^2, \tag{8}$$

where $\boldsymbol{S}$ is the set of all styles, and $\boldsymbol{S}_l$ is the style label input to the discriminator.

Style Triplet Loss: To encourage the mapping together of latent codes for similar styles and enhance the clustering effect of styles, we adopt the style triplet loss proposed in [15]:

$$\begin{aligned}\mathcal{L}_{\text{trip}} &= E_{\boldsymbol{M}_s,\boldsymbol{M}_{s_1},\boldsymbol{M}_{s_2}\sim M}\left[\left\|E_{ms}\left(\boldsymbol{M}_s\right)-E_{ms}\left(\boldsymbol{M}_{s_1}\right)\right\|\right.\\ &\quad\left.-\left\|E_{ms}\left(\boldsymbol{M}_s\right)-E_{ms}\left(\boldsymbol{M}_{s_2}\right)\right\|+\delta\right]_+,\end{aligned} \tag{9}$$

where $s_1\in\boldsymbol{S}$ and $s_2\in\boldsymbol{S}$ are two different styles, $\boldsymbol{M}$ is the training dataset, and $\delta=4$ is the margin.

Unit Quaternion Loss: This loss function [31] utilizes the L2 norm to encourage the quaternions of the generated results to be a unit quaternion, thereby enabling the generation of higher-fidelity motion clips:

$$\mathcal{L}_{\text{uq}}=\frac{1}{T}\left\|\boldsymbol{M}_s-1\right\|_2. \tag{10}$$

The final loss integrates the four above loss functions:

$$\mathcal{L}_{\text{total}}=\mathcal{L}_{\text{rec}}+\mathcal{L}_{\text{adv}}+\mathcal{L}_{\text{trip}}+\mathcal{L}_{\text{uq}}. \tag{11}$$

TABLE I
QUANTITATIVE COMPARISON WITH SOTA METHODS

Methods	Training params (M)	FMD↓	KMD↓	Diversity↑
Aberman *et al.* [15]	2.4	19.405	0.953	2.639
Park *et al.* [16]	13.5	25.482	1.376	2.321
FineStyle [17]	5.3	24.694	1.305	2.341
MoST [18]	4.5	23.260	1.173	2.346
MSTDF (Ours)	3.0	**19.321**	**0.856**	**3.537**

III. EXPERIMENT

A. Implementation Details

The dataset we use is provided by Xia et al. [32], split into training and testing sets at a 9:1 ratio. It includes 8 different motion styles and 5 different motion contents. To ensure the model remains independent of the initial frame selection, we crop motion clips into short overlapping segments of $T=32$ frames with an overlap of 8 frames, resulting in approximately 1,500 motion sequences, which are downsampled to 60 fps.

Our framework trains on an NVIDIA A800 GPU using the Adam optimizer with a learning rate of 3×10^{-6} for both the generator and discriminator and a momentum of 0.1. The model runs for 300 K iterations with a batch size of 128, completing training in about 10 hours. We align all methods to the same settings for fair comparisons before clustering and other operations.

B. Quantitative Evaluation

We conduct a quantitative comparison of our proposed method with SOTA methods [15], [16], [17], [18] using mainstream evaluation metrics: FMD, KMD, and Diversity [16], [17], [33]. The first two metrics are variants of FID [34] and KID [35], measuring the distribution differences between generated motions and real motion sequences, while the last metric assesses the diversity of generated motions. We perform comparative experiments on the Xia dataset [32], with results shown in Table I. Our model has a relatively small number of parameters and requires minimal computational overhead. In this context, our model achieves scores of 19.321, 0.856, and 3.537 on the three quantitative metrics, surpassing existing SOTA methods. This outstanding performance results from our use of dynamic fusion to preserve the content structure of motion, along with the design of the MDF discriminator to capture fine-grained style features of motion sequences, enabling high-fidelity motion style transfer.

C. Qualitative Evaluation

For a visual comparison of motion style transfer effectiveness with SOTA methods [15], [16], [17], [18], we conduct

Authorized licensed use limited to: Hangzhou Normal University. Downloaded on November 25,2025 at 11:22:05 UTC from IEEE Xplore. Restrictions apply.

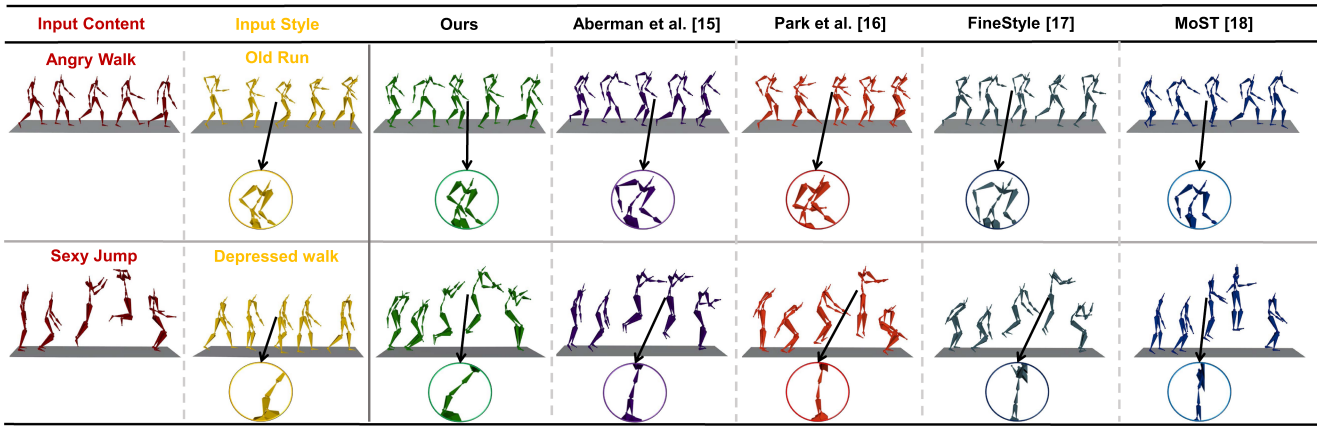

Fig. 3. We present two style transfer cases compared with SOTA methods. Key areas that reflect style characteristics are magnified for more explicit evaluation.

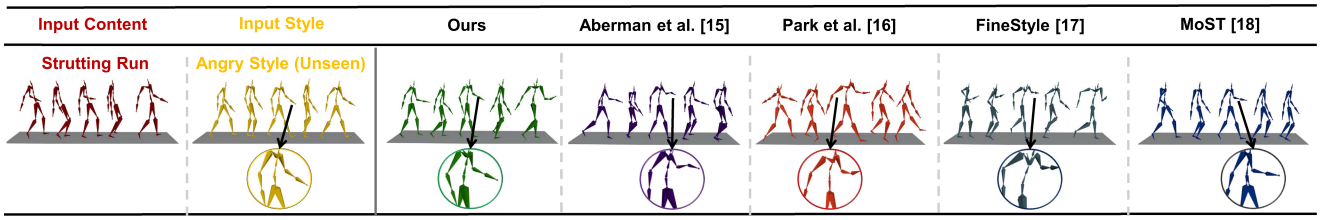

Fig. 4. We transfer an unseen style to the content motion to compare generalizability. Our method outperforms SOTA methods.

qualitative comparisons in Fig. 3, using input motions from the Xia dataset [32]. Ideally, the model preserves motion content while capturing the style, generating stylized motion that combines both features.

We perform two sets of motion style transfers. In the first row, we transfer an old style to walk motion, where our method successfully learns the characteristic of two arms bent and parallel, which other SOTA methods fail to achieve. In the second row, we transfer a depressed style to a jump motion. Our method inherits the jump motion while capturing the curved spine feature of the depressed style, which other methods do not accomplish. These results demonstrate that our MSTDF framework surpasses SOTA methods, achieving superior motion style transfer performance.

D. Generalizability

In practice, style transfer models often encounter motion styles that are not present in the training dataset. To evaluate our model's generalizability to unseen styles, we train the model on the Xia dataset [32] without the `angry` motion and test it on a dataset that includes the `angry` style. We attempt to transfer the unseen `angry` style to run motion, as shown in Fig. 4. Our method successfully inherits the run motion while capturing the unseen style's features, such as the left arm bent at a right angle, the right arm bent at an obtuse angle, and the fingers tightly touching the thigh, which other SOTA methods [15], [16], [17], [18] fail to achieve. This result indicates that our MSTDF framework effectively learns motion features even with unseen styles, offering more practical value in fields like film production and game design.

TABLE II
ABLATION RESULTS OF EACH COMPONENT

Settings	FMD↓	KMD↓	Diversity↑
Ours w/o Dynamic Fusion	24.241	1.213	2.259
Ours w/o MDF Discriminator	30.603	1.723	1.160
Ours w/o $\mathcal{L}_{\text{rec}}$	21.136	0.918	2.572
Ours w/o $\mathcal{L}_{\text{trip}}$	21.046	0.981	2.428
Ours w/o $\mathcal{L}_{\text{uq}}$	20.837	0.865	2.458
Ours (Full)	**19.321**	**0.856**	**3.537**

E. Ablation Studies

We conduct ablation studies to validate each component's necessity in our model. We sequentially remove the dynamic fusion module, MDF discriminator, and loss functions $\mathcal{L}_{\text{rec}}$, $\mathcal{L}_{\text{trip}}$, and $\mathcal{L}_{uq}$, then retrain the model using the training dataset [32]. Quantitative evaluations, using metrics from Section III-B, are presented in Table II. Performance significantly deteriorates when any component is removed, demonstrating their effectiveness.

IV. CONCLUSION

We propose a novel MSTDF framework that treats content and style motion as distinct signals and adopts dynamic fusion to achieve motion style transfer, preserving the local semantic structure. To address the limitations of traditional discriminators in capturing subtle motion style features, we propose the MDF discriminator, which aids the generator in producing finer-grained, high-fidelity stylized motion. Experimental results demonstrate that our method outperforms SOTA methods in qualitative and quantitative evaluations.

Authorized licensed use limited to: Hangzhou Normal University. Downloaded on November 25,2025 at 11:22:05 UTC from IEEE Xplore. Restrictions apply.

REFERENCES

[1] O. Kwon, I. Jang, C. Ahn, and H. -G. Kang, "An effective style token weight control technique for end-to-end emotional speech synthesis," *IEEE Signal Process. Lett.*, vol. 26, no. 9, pp. 1383–1387, Sep. 2019.

[2] D. Yang, S. Huang, Y. Liu, and L. Zhang, "Contextual and cross-modal interaction for multi-modal speech emotion recognition," *IEEE Signal Process. Lett.*, vol. 29, pp. 2093–2097, 2022.

[3] K. Amaya, A. Bruderlin, and T. Calvert, "Emotion from motion," in *Proc. Graph. Interface*, Toronto, Canada, 1996, pp. 222–229.

[4] R. Plutchik, "A general psychoevolutionary theory of emotion," in *Theories of Emotion*. New York, NY, USA: Academic, 1980, pp. 3–33.

[5] P. Ekman, "Are there basic emotions?," *Psychol. Rev.*, vol. 99, no. 3, pp. 550–553, Jul. 1992, doi: 10.1037/0033-295X.99.3.550.

[6] H. Zacharatos, C. Gatzoulis, and Y. L. Chrysanthou, "Automatic emotion recognition based on body movement analysis: A survey," *IEEE Comput. Graph. Appl.*, vol. 34, no. 6, pp. 35–45, Nov./Dec. 2014.

[7] M. Karg, A. -A. Samadani, R. Gorbet, K. Kühnlenz, J. Hoey, and D. Kulić, "Body movements for affective expression: A survey of automatic recognition and generation," *IEEE Trans. Affect. Comput.*, vol. 4, no. 4, pp. 341–359, Oct.–Dec. 2013.

[8] M. Abdul-Massih, I. Yoo, and B. Benes, "Motion style retargeting to characters with different morphologies," *Comput. Graph. Forum*, vol. 36, no. 6, pp. 86–99, 2017.

[9] N. Troje, "Decomposing biological motion: A framework for analysis and synthesis of human gait patterns," *J. Vis.*, vol. 2, no. 5, pp. 371–387, 2002.

[10] S. Etemad and A. Arya, "Classification and translation of style and affect in human motion using RBF neural networks," *Neurocomputing*, vol. 129, pp. 585–595, 2014.

[11] C. Rose, M. F. Cohen, and B. Bodenheimer, "Verbs and adverbs: Multidimensional motion interpolation," *IEEE Comput. Graph. Appl.*, vol. 18, no. 5, pp. 32–40, Sep./Oct. 1998.

[12] C.L. Morawetz, "A high-level approach to the animation of human secondary movement," M.S. thesis, Simon Fraser Univ., Burnaby, BC, Canada, 1989.

[13] W. Ma, S. Xia, J. Hodgins, X. Yang, C. Li, and Z. Wang, "Modeling style and variation in human motion," in *Proc. ACM SIGGRAPH/Eurographics Symp. Comput. Animation*, 2010, pp. 21–30.

[14] J. Min, H. Liu, and J. Chai, "Synthesis and editing of personalized stylistic human motion," in *Proc. ACM SIGGRAPH Symp. Interaction 3D Graph. Games*, 2010, pp. 39–46.

[15] K. Aberman, Y. Weng, D. Lischinski, D. Cohen-Or, and B. Chen, "Unpaired motion style transfer from video to animation," *ACM Trans. Graph.*, vol. 39, no. 4, 2020, Art. no. 64.

[16] S. Park, D.K. Jang, and S.H. Lee, "Diverse motion stylization for multiple style domains via spatial-temporal graph-based generative model," in *Proc. ACM Comput. Graph. Interactive Tech.*, 2021, vol. 4, no. 3, pp. 1–17.

[17] W. Song, X. Jin, S. Li, C. Chen, A. Hao, and X. Hou, "FineStyle: Semantic-aware fine-grained motion style transfer with dual interactive-flow fusion," *IEEE Trans. Vis. Comput. Graph.*, vol. 29, no. 11, pp. 4361–4371, Nov. 2023.

[18] B. Kim, J. Kim, H. Chang, and J. Choi, "MoSt: Motion style transformer between diverse action contents," in *Proc. IEEE/CVF Conf. Comput. Vis. Pattern Recognit.*, 2024, pp. 1705–1714.

[19] J. Zhu, T. Park, P. Isola, and A. Efros, "Unpaired image-to-image translation using cycle-consistent adversarial networks," in *Proc. IEEE Int. Conf. Comput. Vis.*, 2017, pp. 2223–2232.

[20] S. Liu et al., "AdaAttN: Revisit attention mechanism in arbitrary neural style transfer," in *Proc. IEEE/CVf Int. Conf. Comput. Vis.*, 2021, pp. 6649–6658.

[21] Z. Zhou, Y. Wu, X. Yang, and Y. Zhou, "Neural style transfer with adaptive auto-correlation alignment loss," *IEEE Signal Process. Lett.*, vol. 29, pp. 1027–1031, 2022.

[22] X. Deng, "Enhancing image quality via style transfer for single image super-resolution," *IEEE Signal Process. Lett.*, vol. 25, no. 4, pp. 571–575, Apr. 2018.

[23] J. Cheng, Z. Han, Z. Wang, and L. Chen, "'One-shot' super-resolution via backward style transfer for fast high-resolution style transfer," *IEEE Signal Process. Lett.*, vol. 28, pp. 1485–1489, 2021.

[24] A. Vaswani et al., "Attention is all you need," in *Proc. Adv. Neural Inf. Process. Syst.*, 2017, pp. 5998–6008.

[25] Y. Li et al., "EfficientFormer: Vision transformers at MobileNet speed," in *Proc. Adv. Neural Inf. Process. Syst.*, 2022, pp. 12934–12949.

[26] D. Yang et al., "AIDE: A vision-driven multi-view, multi-modal, multi-tasking dataset for assistive driving perception," in *Proc. IEEE/CVF Int. Conf. Comput. Vis.*, 2023, pp. 20459–20470.

[27] M. Li, D. Yang, and L. Zhang, "Towards robust multimodal sentiment analysis under uncertain signal missing," *IEEE Signal Process. Lett.*, vol. 30, pp. 1497–1501, 2023.

[28] K. Zhang, Y. Li, J. Wang, Z. Wang, and X. Li, "Feature fusion for multimodal emotion recognition based on deep canonical correlation analysis," *IEEE Signal Process. Lett.*, vol. 28, pp. 1898–1902, 2021.

[29] X. Huang and S. Belongie, "Arbitrary style transfer in real-time with adaptive instance normalization," in *Proc. IEEE Int. Conf. Comput. Vis.*, 2017, pp. 1501–1510.

[30] I.J. Goodfellow et al., "Generative adversarial networks," in *Proc. Int. Conf. Neural Inf. Process. Syst.*, 2014, pp. 2672–2680.

[31] Y. Huang, H. Mo, X. Liang, and C. Gao, "Unpaired motion style transfer with motion-oriented projection flow network," in *Proc. IEEE Int. Conf. Multimedia Expo*, 2022, pp. 1–6.

[32] S. Xia, C. Wang, J. Chai, and J. Hodgins, "Realtime style transfer for unlabeled heterogeneous human motion," *ACM Trans. Graph.*, vol. 34, no. 4, pp. 1–10, 2015.

[33] S. Raab, I. Leibovitch, P. Li, K. Aberman, O. Sorkine-Hornung, and D. Cohen-Or, "MoDi: Unconditional motion synthesis from diverse data," in *Proc. IEEE/CVF Conf. Comput. Vis. Pattern Recognit.*, 2023, pp. 13873–13883.

[34] M. Heusel, H. Ramsauer, T. Unterthiner, B. Nessler, and S. Hochreiter, "GANs trained by a two time-scale update rule converge to a local NASH equilibrium," in *Proc. Adv. Neural Inf. Process Syst.*, 2017, pp. 6629–6640.

[35] B. Mikołaj, J. S. Dougal, A. Michael, and G. Arthur, "Demystifying MMD GANs," in *Proc. Int. Conf. Learn. Representations*, 2018, pp. 1–36.

Authorized licensed use limited to: Hangzhou Normal University. Downloaded on November 25,2025 at 11:22:05 UTC from IEEE Xplore. Restrictions apply.