AD9850 & AD9851

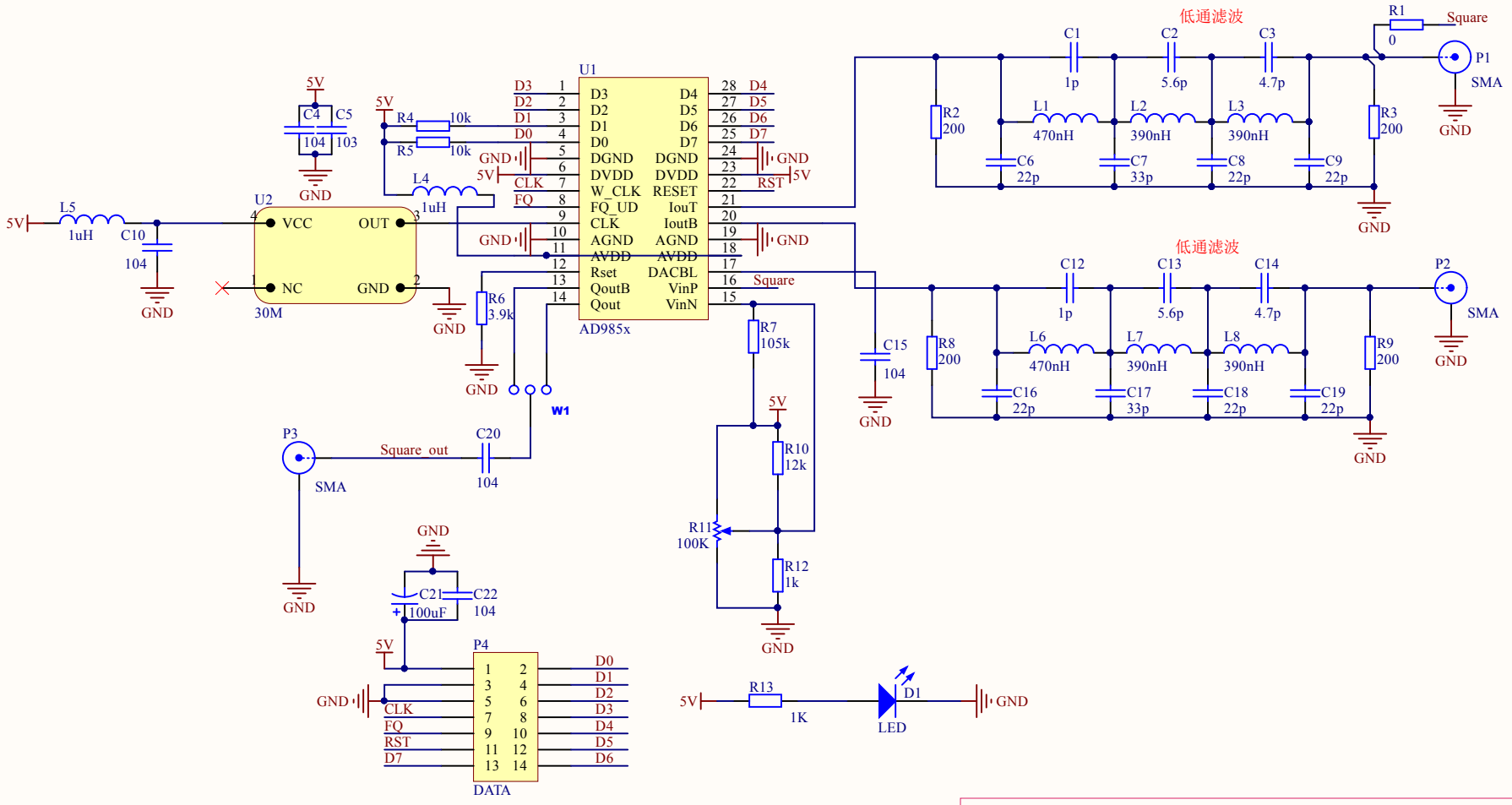

Title: DDS-AD9851.SchDoc		康威科技工作室
Project: DDS-AD9851.PrjPcb		
Size: A4	Revision: *	Author: *
Data: 2015/7/24	Company: *	

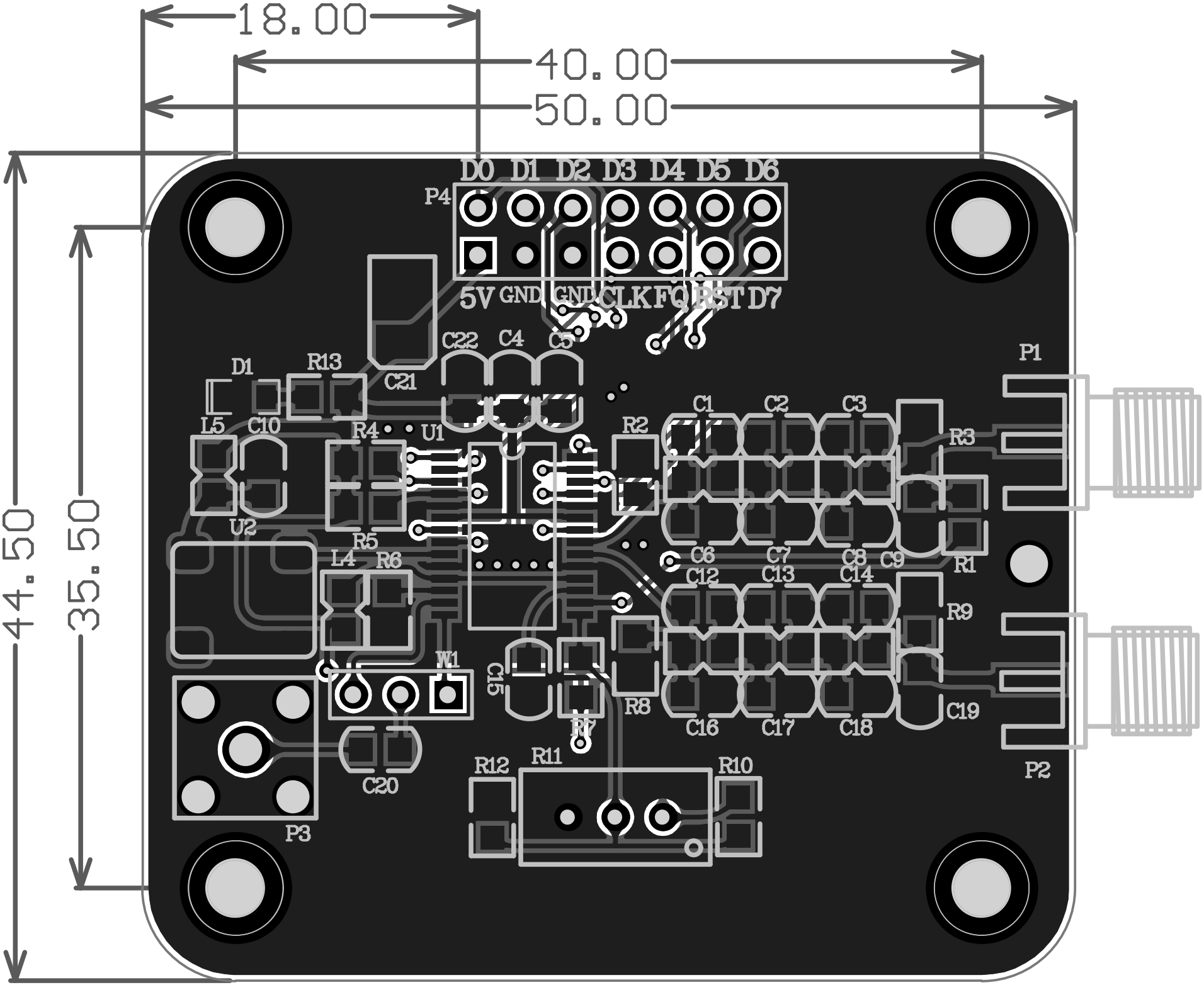
18.00
40.00
50.00
44.50
35.50
D0 D1 D2 D3 D4 D5 D6
P4
5V GND GND CLK FQ RST D7
C22 C4 C5
C21
D1
R13
L5
C10
R4
U1
R2
C1 C2 C3
R3
P1
U2
R5
L4
R6
C6 C7 C8 C9
C12 C13 C14
R1
R9
W1
C15
R8
R7
C16 C17 C18
C19
C20
R12
R11
R10
P2
P3