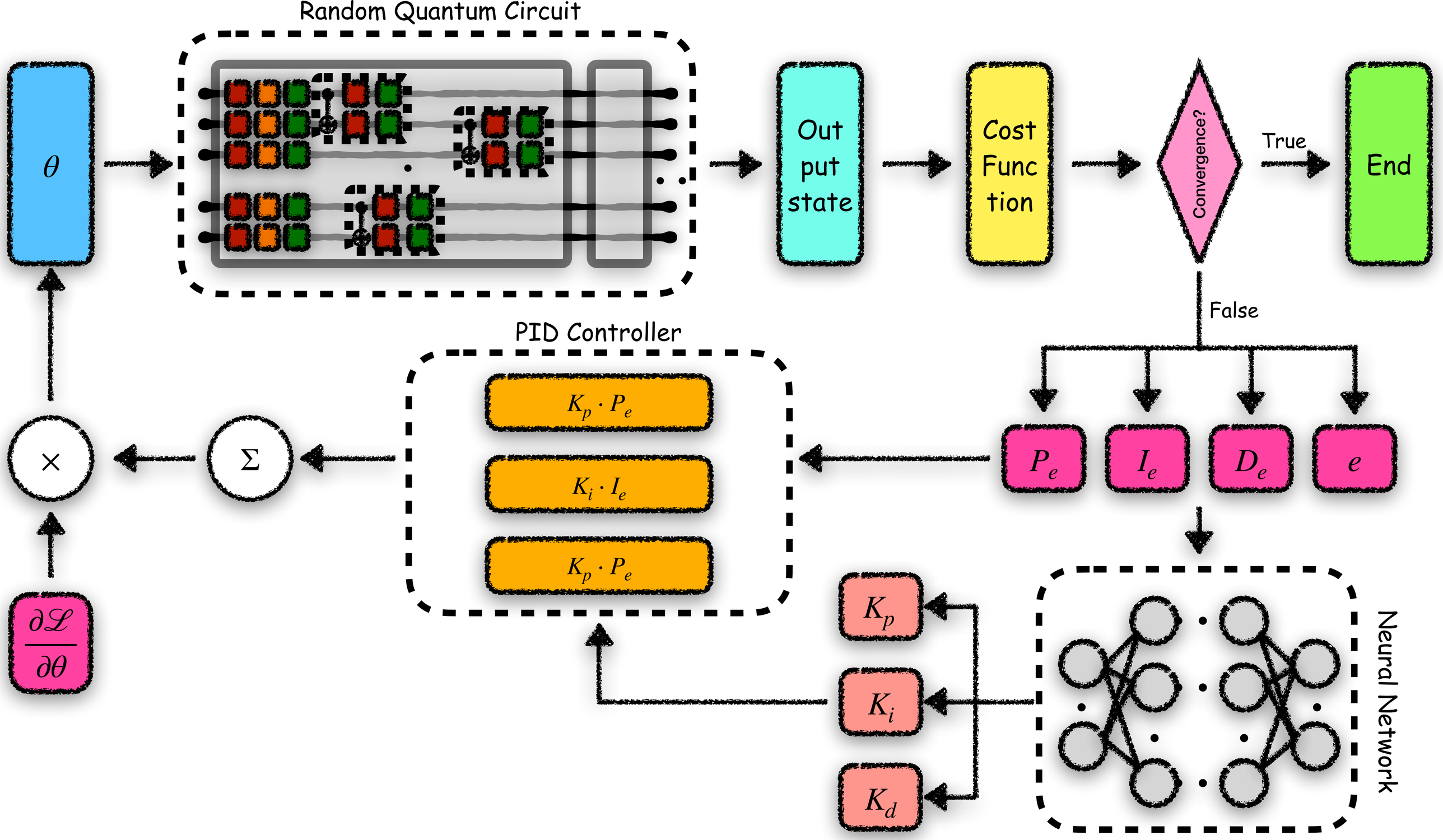
Random Quantum Circuit
θ
Out put state
Cost Func tion
Convergence?
True
End
False
PID Controller
$K_p \cdot P_e$
$K_i \cdot I_e$
$K_p \cdot P_e$
P_e
I_e
D_e
e
$\times$
Σ
$\frac{\partial \mathscr{L}}{\partial \theta}$
K_p
K_i
K_d
Neural Network