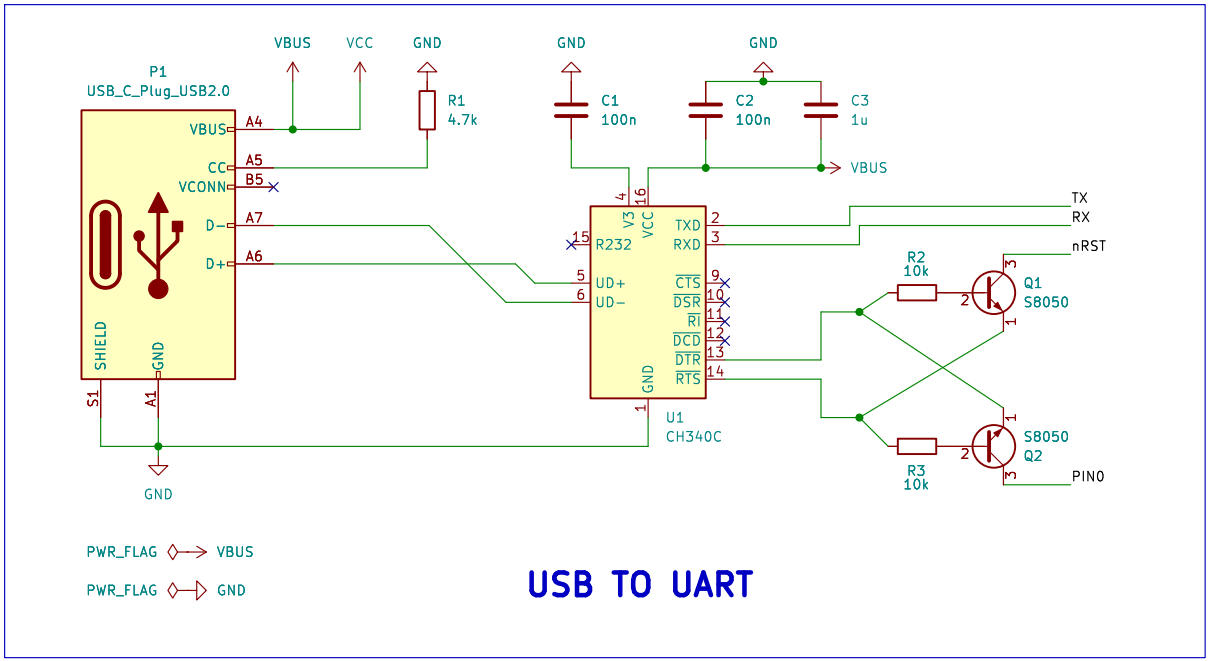

USB TO UART

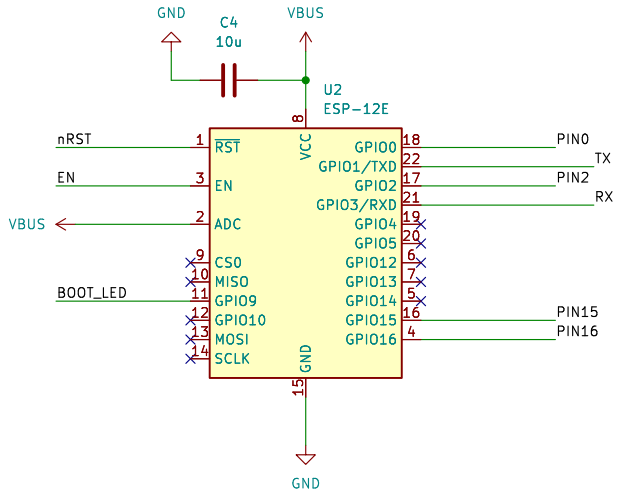

ESP8266 MOD

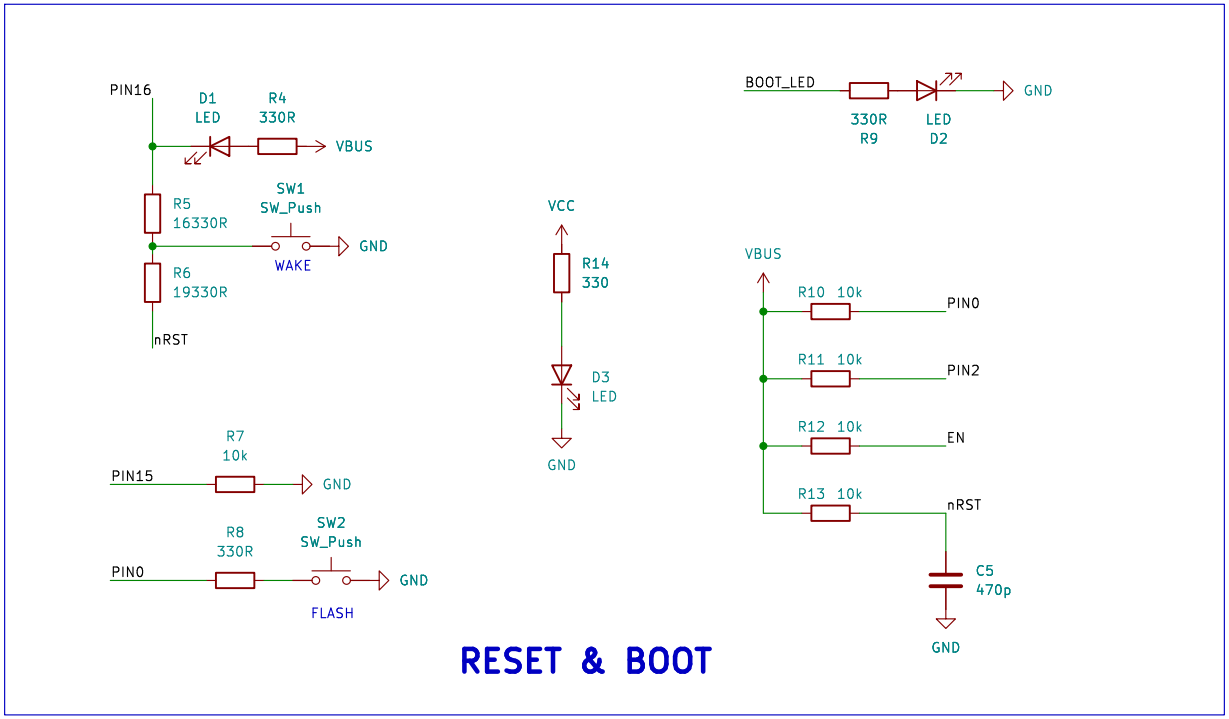

RESET & BOOT

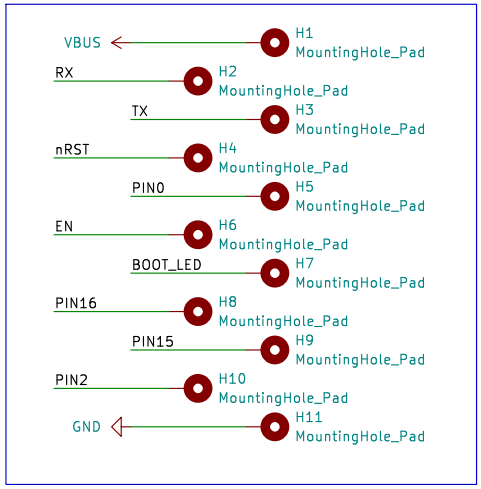

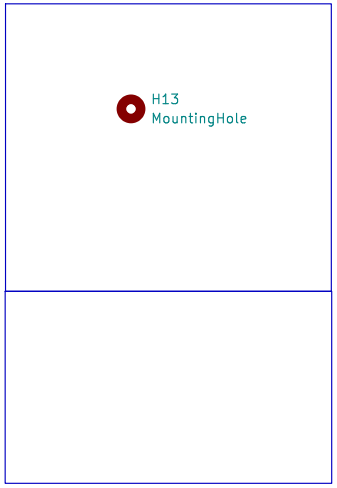

Sheet: /
File: esp32_programmer.kicad_sch

Title:

Size: A4	Date:	Rev:
KiCad E.D.A. kicad 7.0.9		Id: 1/1