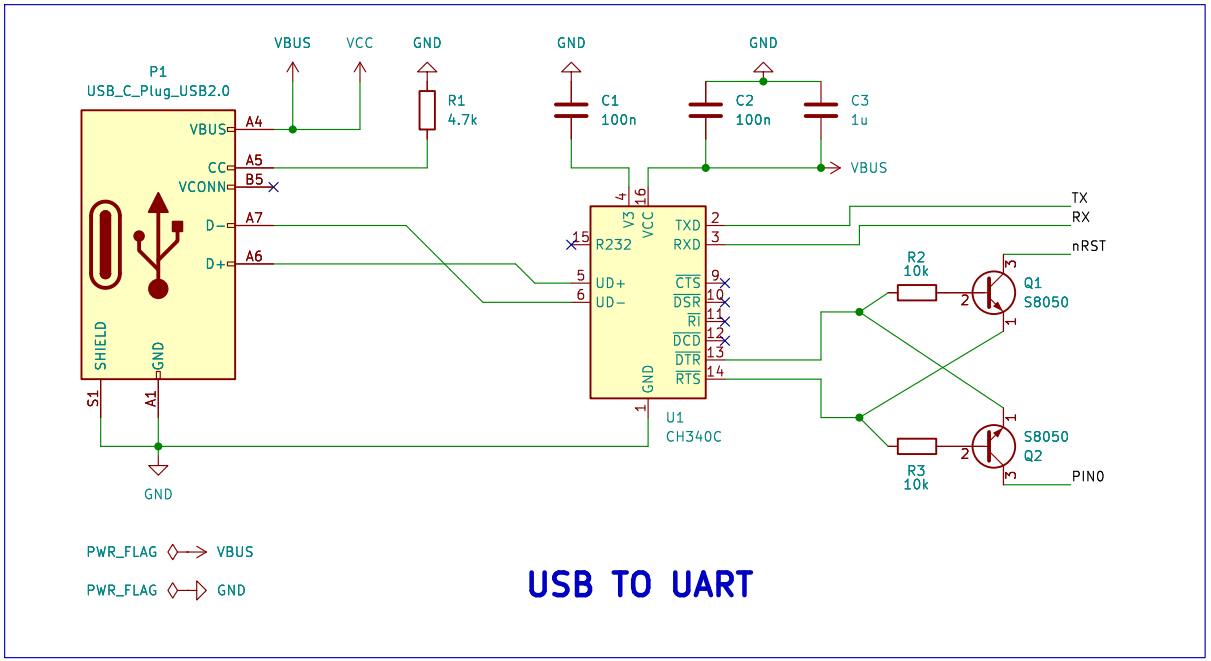

USB TO UART

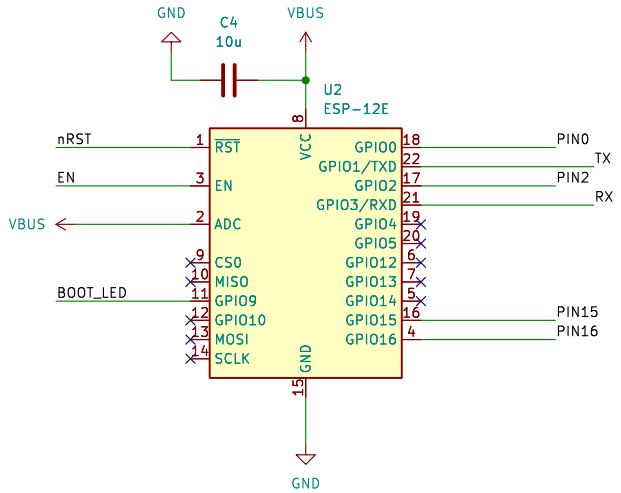

ESP8266 MOD

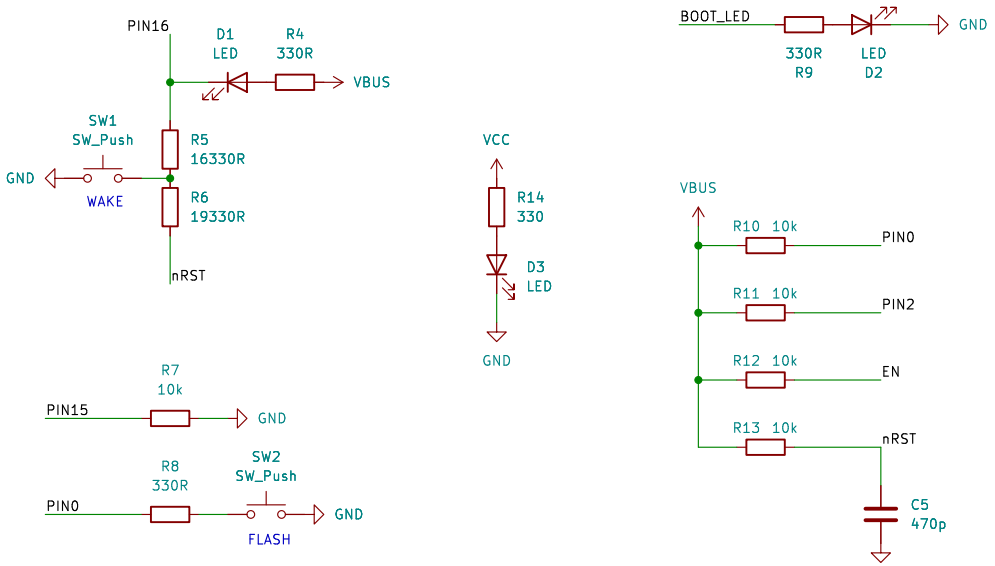

RESET & BOOT

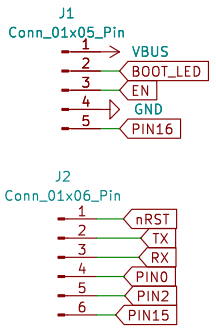

Zheng Lin Lei

Sheet: /

File: esp32_programmer.kicad_sch

Title: esp8266 programmer

Size: A4	Date: 2024-01-22	Rev: v2
KiCad E.D.A. kicad 7.0.9		Id: 1/1