POWER AMPLIFIER

SHEET#	DESCRIPTION
01	COVER PAGE
02	SA9227_USB_AUDIO
03	USB_CONNECTOR
04	SA9227_CLOCK&RESET
05	POWER
06	DAC_CS43198
07	STM32
08	LOWPASS&EQ
09	VOLUME CONTROL
10	HEADPHONE
11	SPEAKER
12	
13	
14	
15	
16	

TITLE: COVER PAGE	DATE: 2025/11/19
ENGINEER:	PAGE: 01

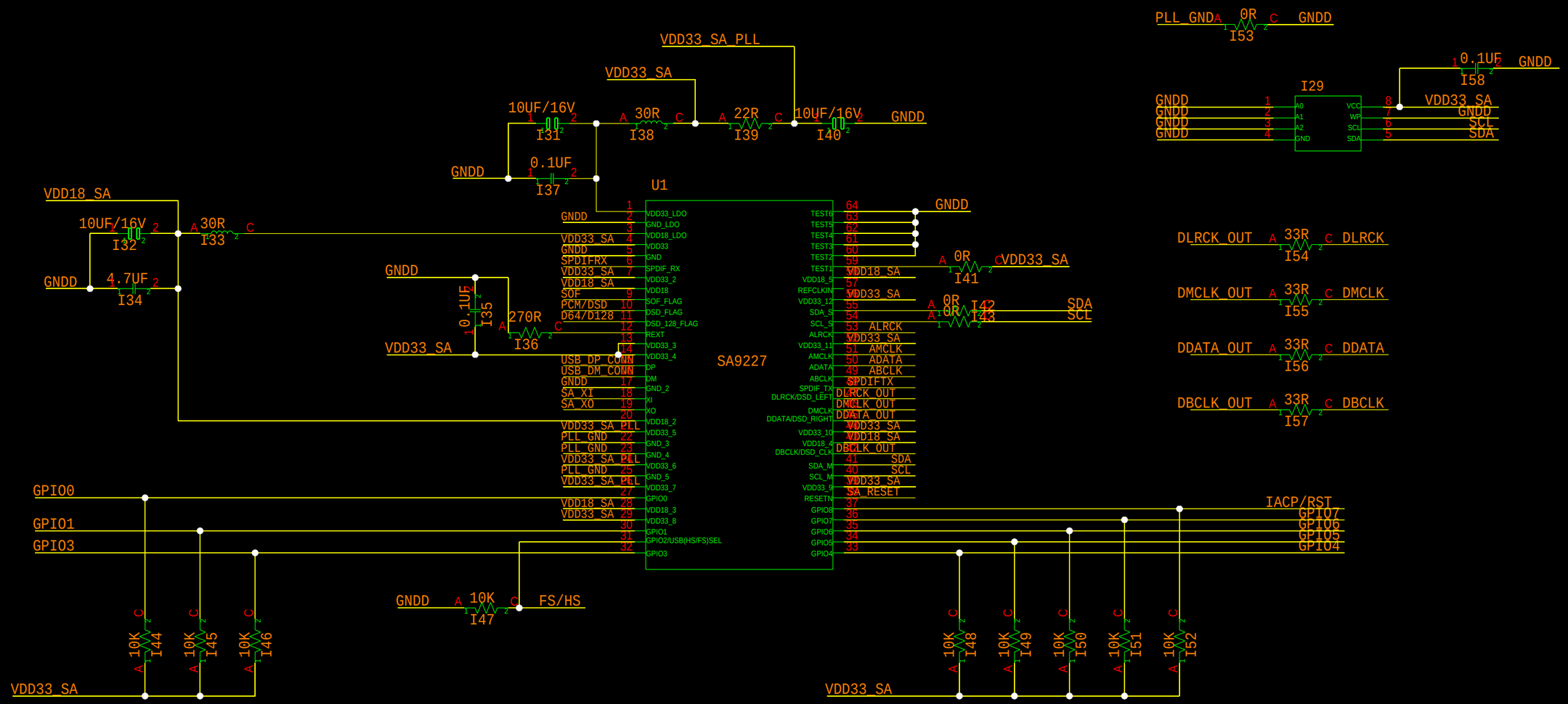

TITLE:	DATE:
SA9227A_USB_AUDIO	2025/11/19
ENGINEER:	PAGE: 02

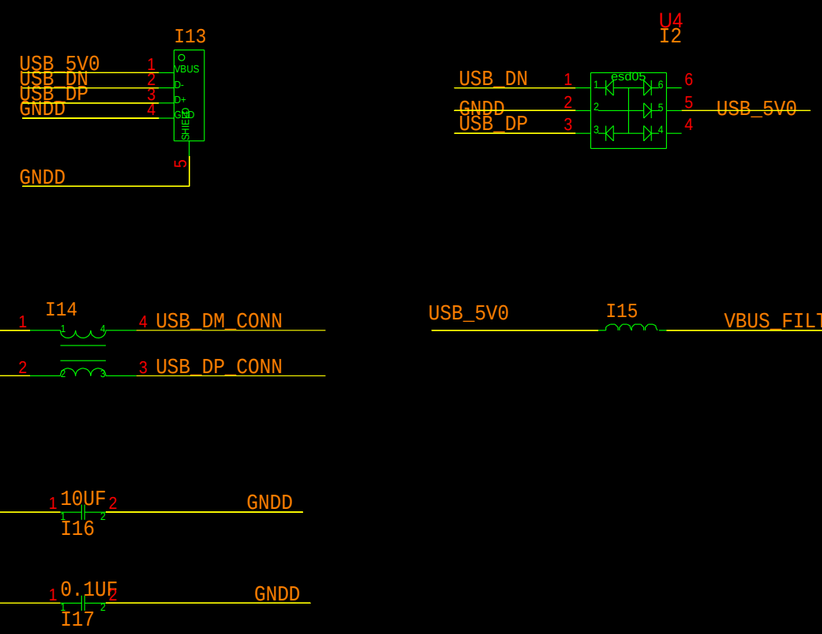

TITLE: USB_CONNECTOR	DATE: 2025/11/20
ENGINEER:	PAGE: 03

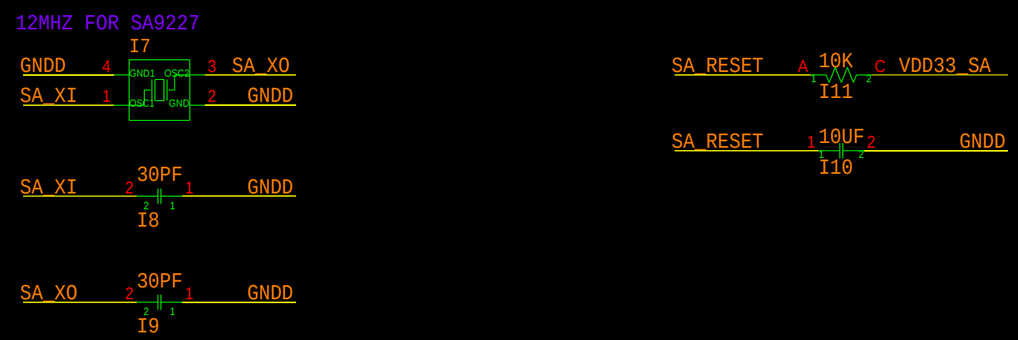

TITLE: SA9227_CLOCK&RESET	DATE: 2025/11/20
ENGINEER:	PAGE: 04

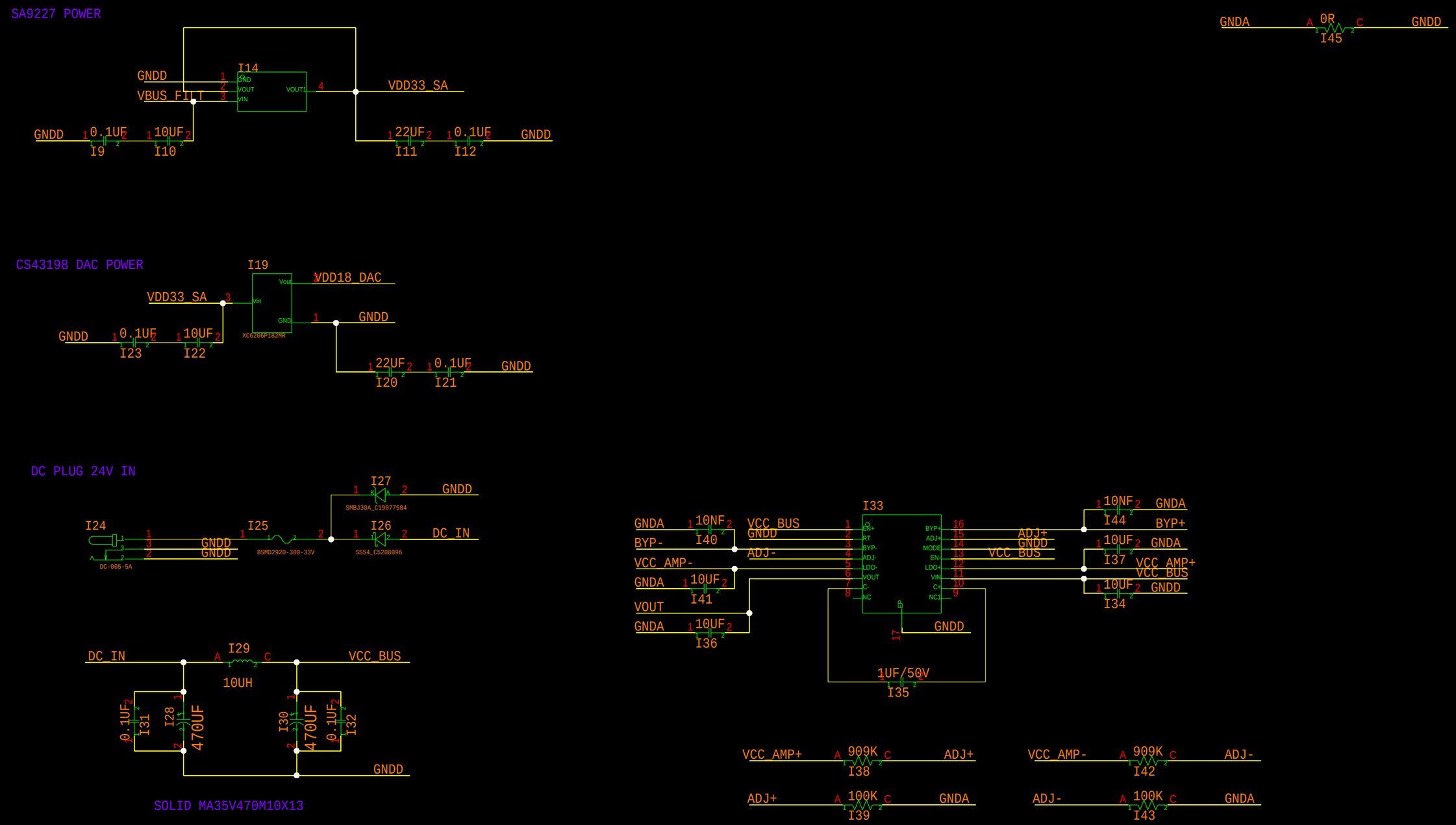

TITLE: POWER	DATE: 2025/11/21
ENGINEER:	PAGE: 05

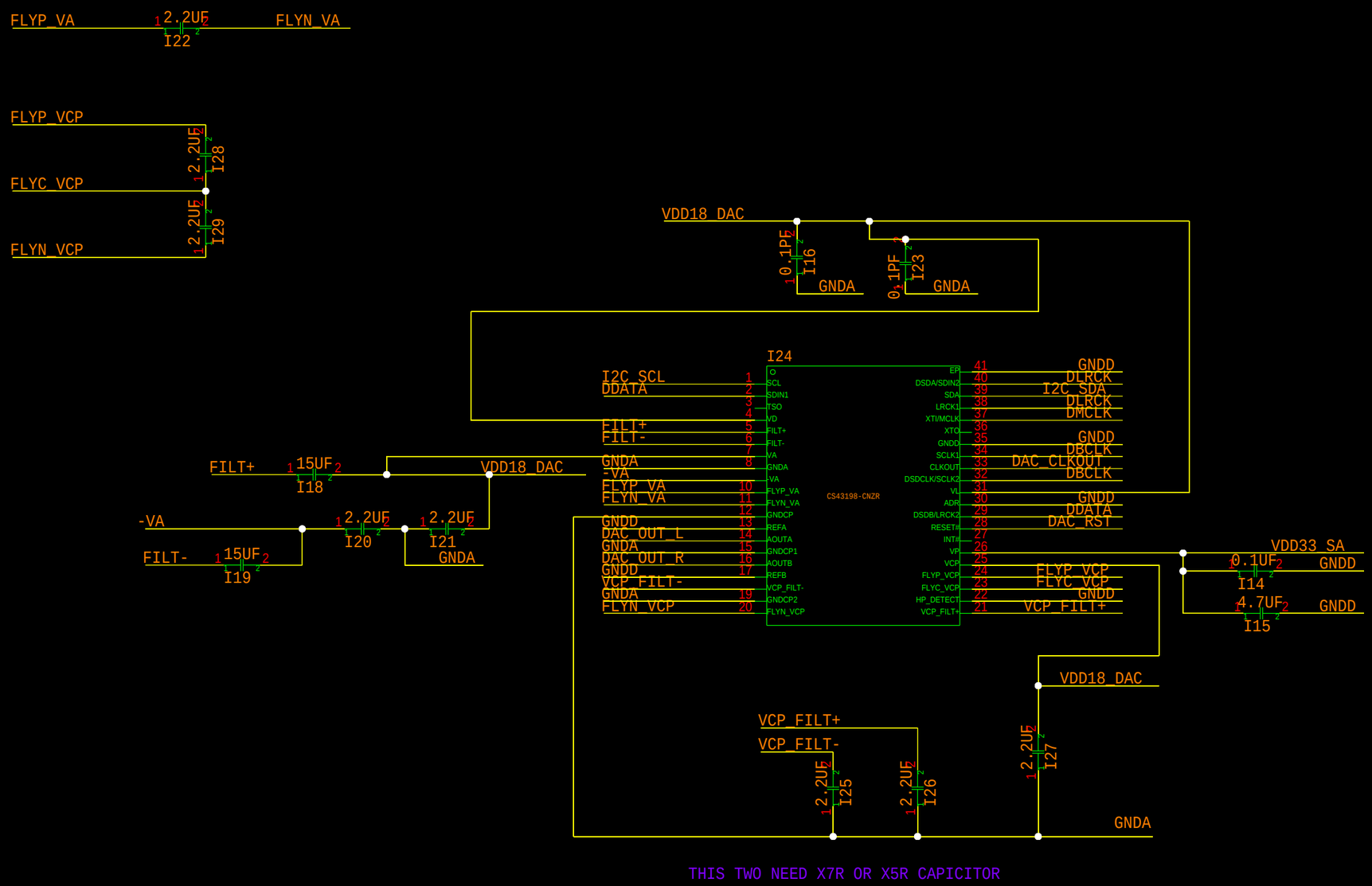

THIS TWO NEED X7R OR X5R CAPICITOR

TITLE: DAC_CS43198	DATE: 2025/11/24
ENGINEER:	PAGE: 06

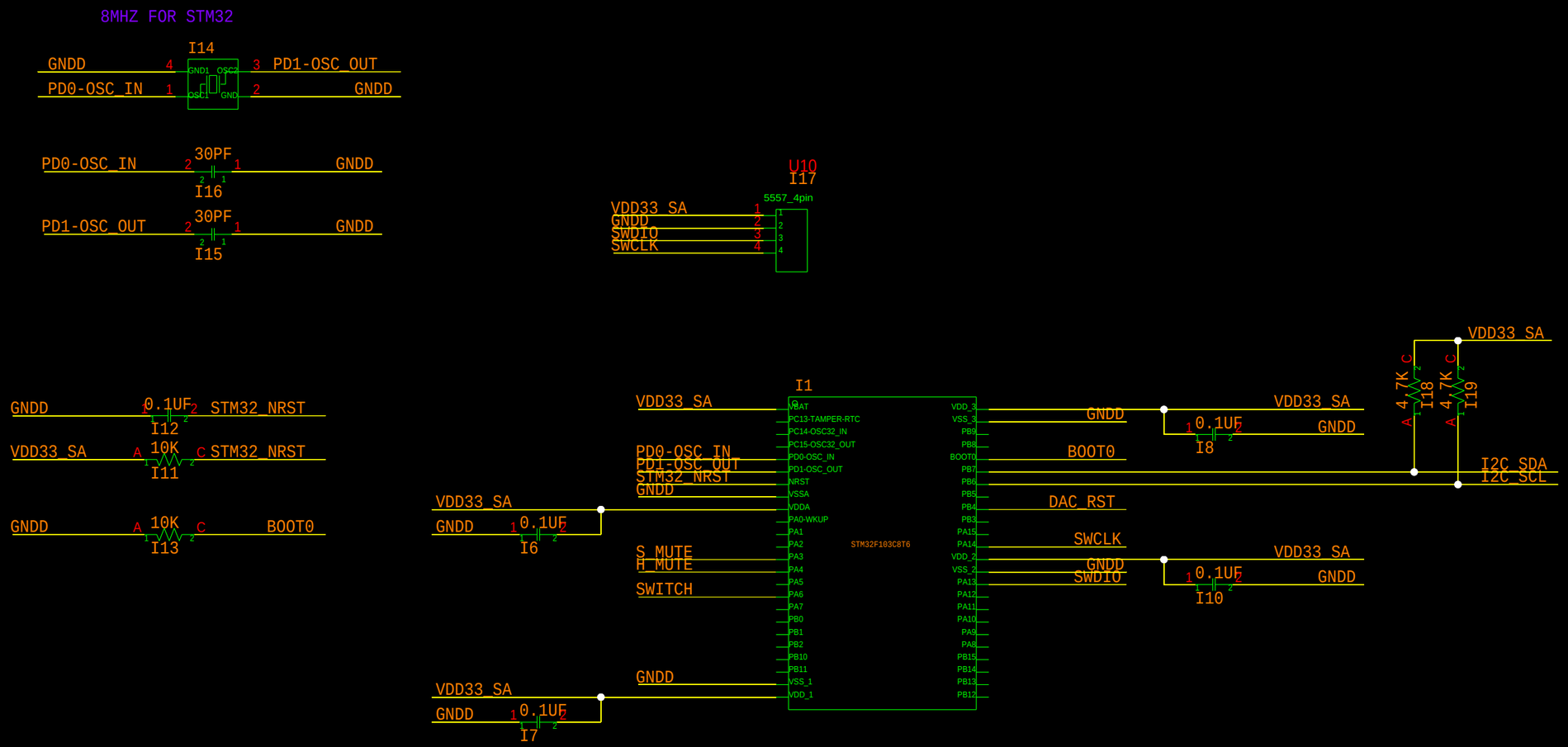

TITLE: STM32	DATE: 2025/11/27
ENGINEER:	PAGE: 07

LOW PASS

LEFT PANAL

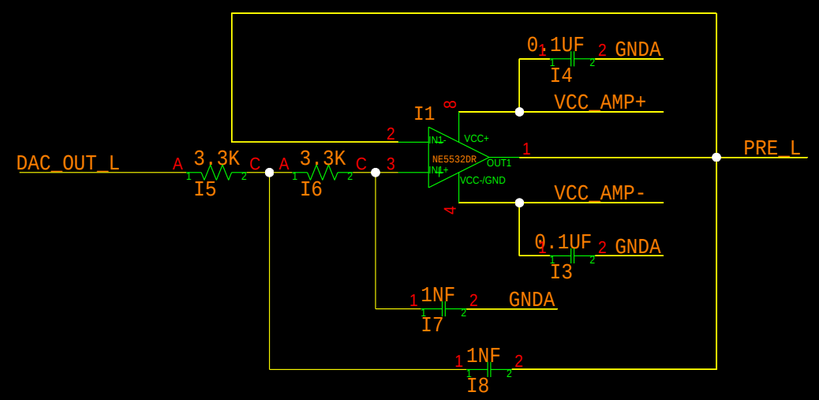

RIGHT PANAL

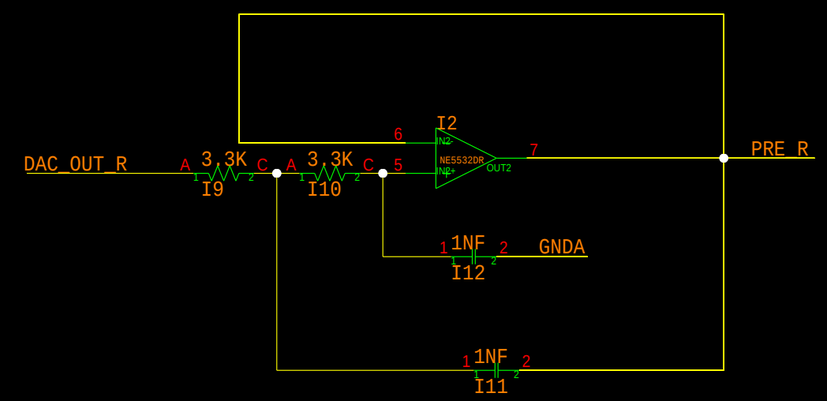

EQ

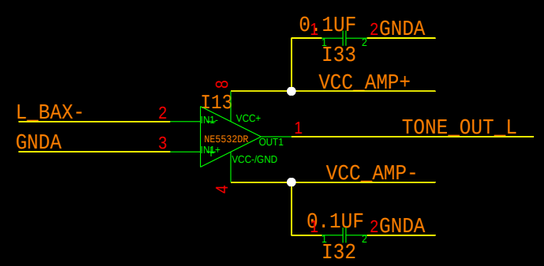

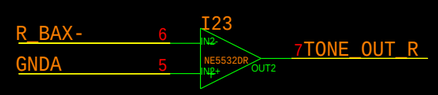

BASS

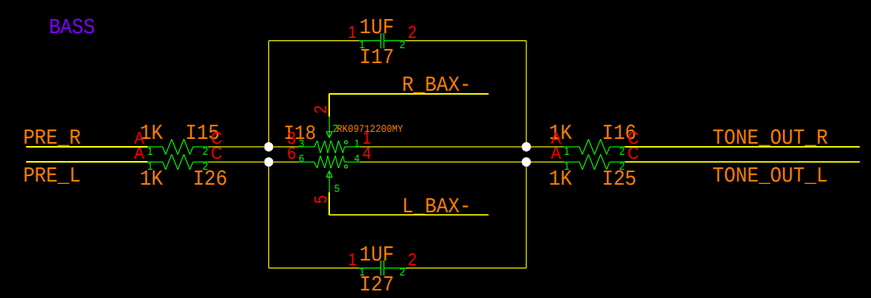

TREBLE

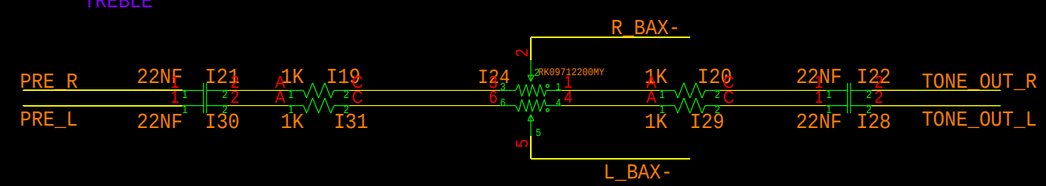

TITLE: LOWPASS&EQ	DATE: 2025/11/29
ENGINEER:	PAGE: 08

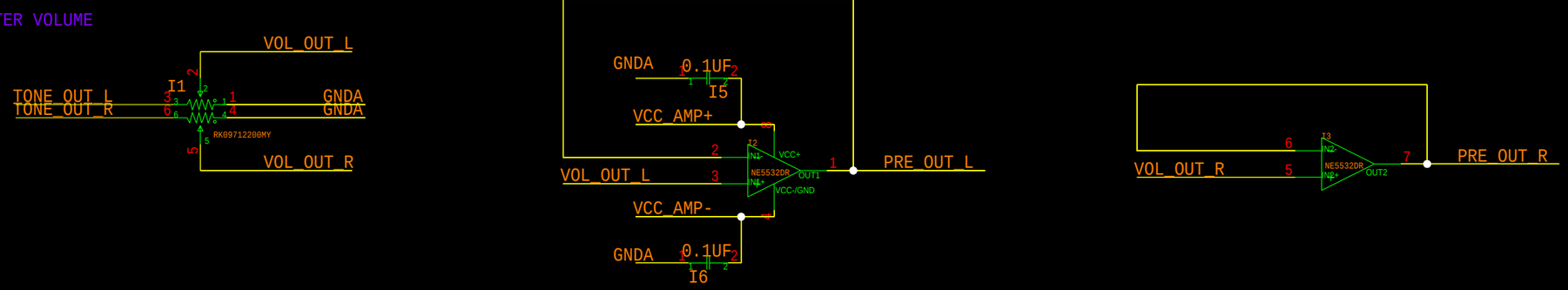

TITLE: VOLUME CONTROL	DATE: 2025/12/2
ENGINEER:	PAGE: 09

GAIN = 2V/V (6DB)

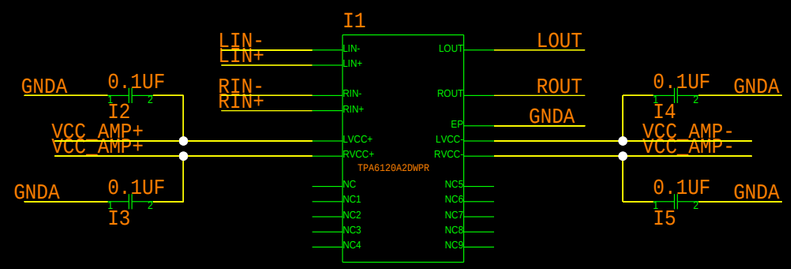

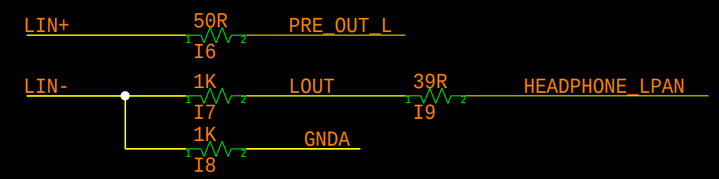

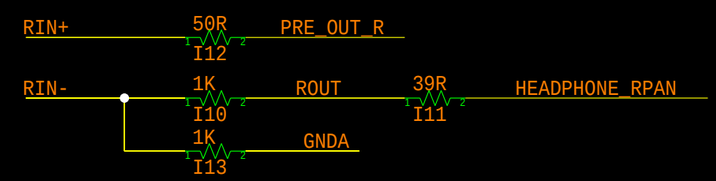

TITLE: HEADPHONE	DATE: 2025/12/2
ENGINEER:	PAGE: 10

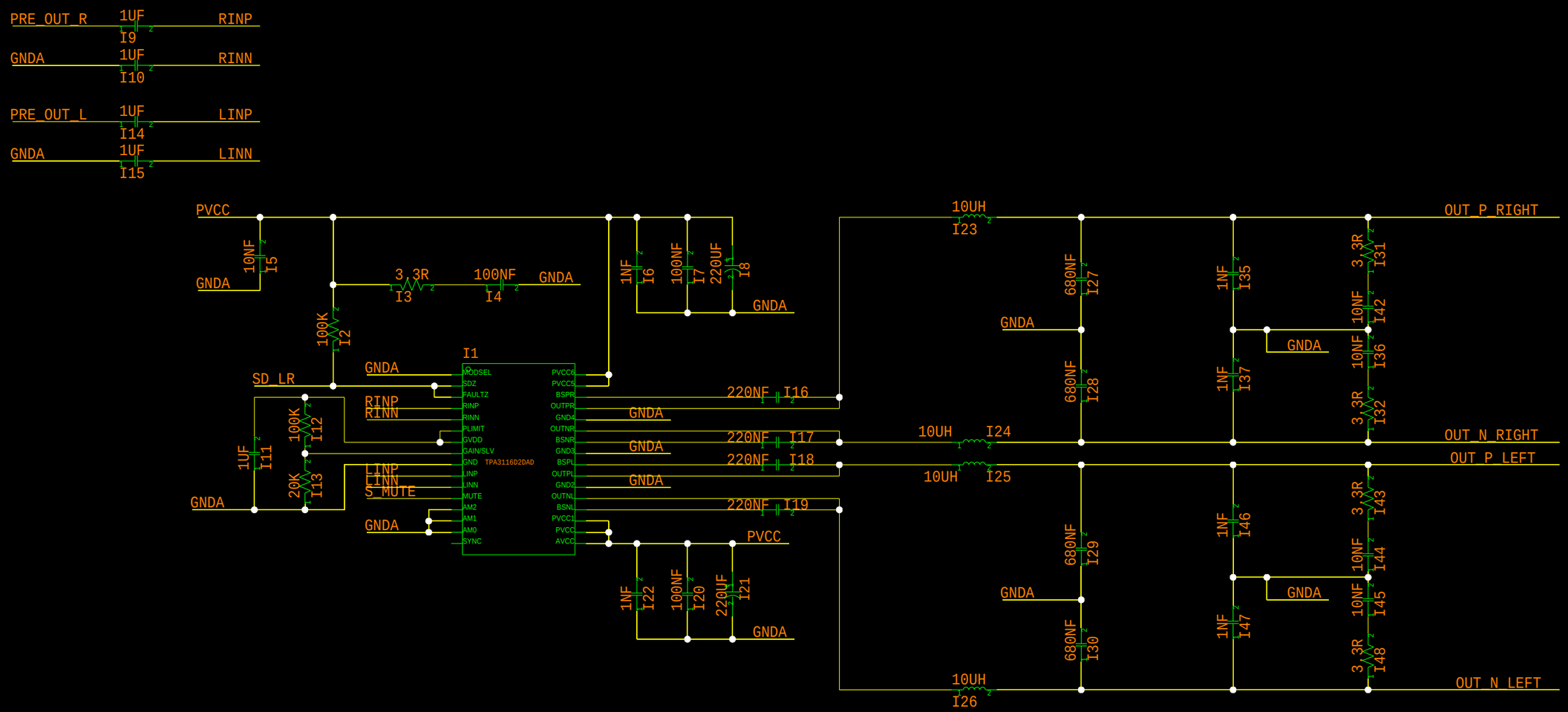

TITLE: SPEAKER	DATE: 2025/12/9
ENGINEER:	PAGE: 11