18.5 A Rail-to-Rail 3rd-Order Noise-Shaping SAR ADC Achieving 105.4dB SFDR with Integrated Input Buffer Using Continuous-Time Correlated Level Shifting

Siyuan Ye, Jiajia Cui, Jihang Gao, Jie Li, Xing Zhang, Ru Huang, Linxiao Shen

Peking University, Beijing, China

With the development of high-resolution ADCs (>13b) leveraging the SAR topology, the pursuit of power efficiency in ADC design continues to make remarkable strides [1-5]. However, as the capacitance of the capacitive DAC (CDAC) increases to satisfy the kT/C noise specification, excessive driving pressure is posed on the front-end input buffer. Furthermore, a separate higher supply voltage is typically demanded for the driver to accommodate the input swing while maintaining the linearity requirement. The increasing load and wide supply voltage often make the power consumption of the ADC core overwhelmed by the power consumption of the driving buffer, presenting a bottleneck in achieving an overall energy-efficient system. Loop-embedded buffer architectures have been explored in prior arts to reduce the linearity requirement of the buffer while easing the driving pressure of the system [2], [6-8]. Rail-to-rail signal swing is achieved in [7] with a dedicated capacitive level shifting bias scheme. Besides, a rail-to-rail high-linearity input buffer using a predictive level shifting technique is proposed in [3], but careful tuning of the predictor is necessary for the targeted performance.

In this work, a continuous-time correlated level shifting (CTCLS) technique is proposed in a capacitively coupled instrumentation amplifier (CCIA), which serves dual roles as both an ADC input driver and a programmable gain amplifier (PGA). The rail-to-rail high linearity (105.4dB SFDR) is achieved thanks to the CTCLS technique. In addition, a 3rd-order noise-shaping SAR ADC is implemented and the kT/C noise cancellation technique is performed to not only reduce the driving pressure but also limit the noise bandwidth of the CCIA. Capable of processing the rail-to-rail $2.4V_{ppd}$ input, the 55nm prototype achieves 82.9dB SNDR and 105.4dB SFDR at 40MS/s while consuming 1.15mW under a 1.2V supply. It measures a competitive Schreier FoM of 176.3dB and the highest SFDR of 105.4dB among ADCs with a rail-to-rail input buffer.

The operation of the proposed CTCLS architecture is illustrated in Fig. 18.5.1. The main objective is to reduce the amplifier output swing. The front-end operation consists of three steps: tracking and the 1st and 2nd CLS phases. During the tracking phase, while the back-end ADC is in the conversion state, both the level-shifting capacitors C_{LS1} and C_{LS2} act as the load capacitor of the CCIA and continuously track the input. Although the amplifier will enter the saturation state as the input approaches V_{DD}, the large distortions are not of concern since only a coarse voltage is needed on the C_{LS1} and C_{LS2}. When the ADC finishes the conversion and starts the next sampling, the 1st correlated level shifting takes place in the CCIA. The C_{LS1} is connected in series with the amplifier, acting as a level shifter and reducing the output swing of the amplifier. As a result, the C_{LS2} and C_S acquire a more accurate version of the input. However, unlike the CLS technique adopted in the discrete-time amplifier [9-14], which deals with a sampled DC signal, the continuously changing input in this work could still show up at the amplifier output and thus degrading the linearity. In order to achieve a higher linearity, after some time, the 2nd correlated level shifting is performed by using the C_{LS2} as the level shifting capacitor. Because the load capacitor is the smallest in this phase and the left voltage error needs to be settled is also the smallest, the allocated time for the 2nd CLS can be quite short. Therefore, the output voltage swing resulting from the continuously changing input is much smaller and the remaining nonlinearity is well suppressed by the open-loop gain of the amplifier. As the simulation shows in the bottom right of Fig. 18.5.1, in contrast with the large distortion (< 40dB THD) in the tracking phase due to the amplifier saturation under a rail-to-rail input, high linearity (> 90dB THD) is attained at the sampling end thanks to the swing reduction from the proposed CTCLS. Although an oversampling ratio (OSR) over 8 is needed, it is a mild requirement as a small OSR is commonly used to relax the anti-alias filter requirement.

The system implementations are shown in Fig. 18.5.2. A 3-stage amplifier is utilized in the CTCLS buffer. Each stage is implemented as a simple inverter-based amplifier with different biasing currents. The dominant pole is placed at the A_3 output node. Note that although such a structure in the output stage A_3 is not optimized for the output swing, the high linearity can still be achieved thanks to the effective swing reduction from the proposed CTCLS. The feedback capacitor C_F is configurable for verifying its function as a PGA. A pseudo resistor and a unity-gain buffer form the DC servo loop of the CCIA, which defines the DC point of the virtual ground. The kT/C cancellation technique is adopted in the back-end noise-shaping SAR ADC, which brings about 2 advantages. First, the small sampling capacitor C_S, thanks to the kT/C cancellation, reduces the load of the input buffer and eases the driving pressure. The charge-sharing effect during the level-shifting process is also relieved and leads to a better swing reduction. Second, the actual sampling in the ADC occurs at the falling edge of φ_{S2}. During the kT/C extraction phase, the noise from the preceding input buffer is effectively filtered by the preamplifier's bandwidth. The bandwidth of the input buffer is mainly determined by the settling requirement. By contrast, the slow signal variations in the mild-oversampling ADCs permit a longer kT/C extraction time. This extended period greatly reduces the bandwidth demands on the preamplifier without saturation concern, thereby enhancing the system's noise performance.

Figure 18.5.3 displays the detailed implementation of the 3rd-order noise-shaping SAR ADC with an improved kT/C noise cancellation scheme. In a SAR ADC, the kT/C sampling noise can be canceled out by the simple "in-comparator" noise injection scheme [15]. However, it is not directly compatible with the noise-shaping SAR structure where the sampling noise replica would be shaped along the quantization and the sampling noise is no longer canceled [1]. Based on the signal flow of a common noise-shaping SAR ADC, an observation can be made that the sampling noise replica injected in the residue extraction path will lead to a kT/C noise-shaping effect. Moreover, if the replica is injected in both the quantization and the residue extraction path, the kT/C noise cancellation can still be obtained. Although this process might seem complex, it can be efficiently implemented by reusing a preamplifier for both the quantization and the residue extraction. The hybrid EF-CIFF loop filter [1] is placed after the preamplifier, where the EF path provides 1st order and the CIFF path provides 2nd order. As a result, the noise from the loop filter can be suppressed by the preamplifier, which brings about two advantages in implementation. First, smaller capacitors can be used in the loop filter, cutting down the area cost without noise concern. Second, the simple multi-input comparator is adopted in the CIFF path for providing the gain, while its noise inefficient shortage is negligible since it is also suppressed by the preamplifier gain.

The prototype ADC designed in a 55nm process occupies $0.043mm^2$ (Fig. 18.5.7) and consumes 1.15mW from a 1.2V supply at a 40MHz sampling rate and 2.5MHz input bandwidth (620μW for the CCIA analog part including the 3-stage amplifier, 60μW for the CCIA digital part including the clock generation, 334μW for the ADC analog part including the preamplifier, comparator and bootstrap switches, 120μW for the ADC digital part including the SAR logic and 16μW for the reference). One-time off-chip calibration for CDAC capacitor mismatch is applied and fixed in all measurements afterward. Figure 18.5.4 shows the measured output spectra under a 499.6kHz full-swing input. During the sampling phase, if the CCIA is configured as the amplifier tracking structure, large distortions are exhibited owing to the amplifier saturation. When the CCIA is configured as the 1st CLS structure, the linearity is improved but it is still limited due to the changing input during the whole sampling time. Equipped with the proposed CTCLS structure, the output swing is reduced further, resulting in an 82.9dB SNDR and 105.4dB SFDR. The measured output spectrum under a half-swing input and 2× CCIA gain is also displayed in Fig. 18.5.4, for the verification of the PGA compatibility. The SNDR degrades about 3dB as expected because of the 6dB input swing reduction and 3dB total input referred noise improvement. The measured dynamic range is displayed in Fig. 18.5.5. Six randomly selected samples are also reported which exhibit <1dB SNDR variation. Figure 18.5.6 compares the performance of this chip with other state-of-the-art ADCs integrated with input buffers. Our work achieves a competitive Schreier FoM of 176.3dB and the highest SFDR of 105.4dB among ADCs with a rail-to-rail input buffer.

Acknowledgement:
This work was supported by National Natural Science Foundation of China (No. 62474004), Beijing Nova Program (No. 20240484743), and the 111 project (No. B18001). The corresponding author is Linxiao Shen (Linxiao.shen@pku.edu.cn).

2025 IEEE International Solid-State Circuits Conference (ISSCC) | 979-8-3315-4101-9/25/$31.00 ©2025 IEEE | DOI: 10.1109/ISSCC49661.2025.10904773

Authorized licensed use limited to: Zhejiang University. Downloaded on January 22,2026 at 06:09:42 UTC from IEEE Xplore. Restrictions apply.

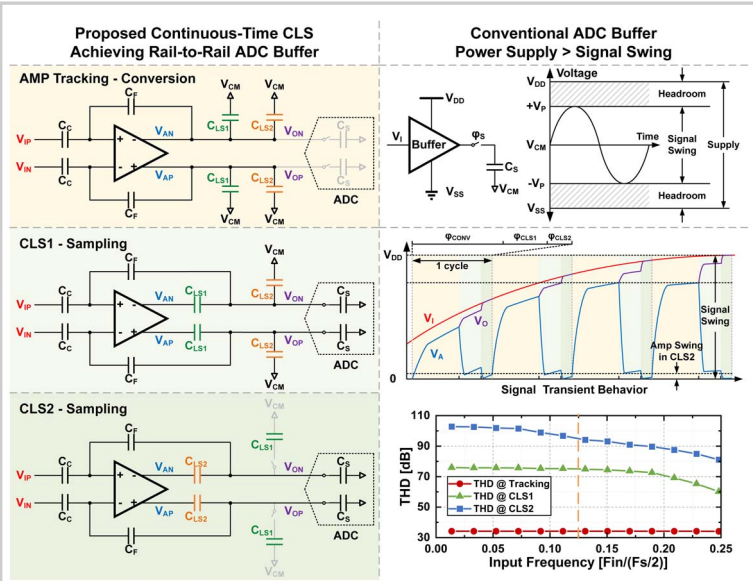

Figure 18.5.1: The proposed continuous-time correlated level shifting for rail-to-rail high linearity.

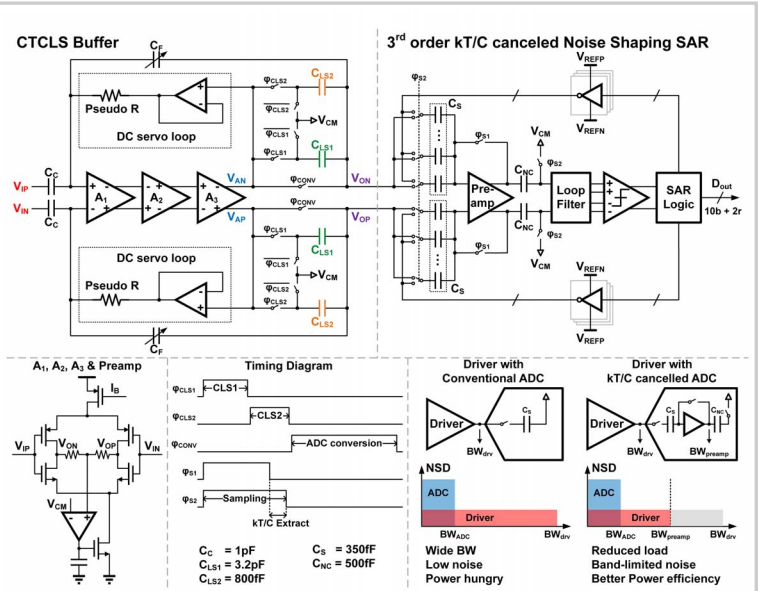

Figure 18.5.2: System architecture and timing diagram.

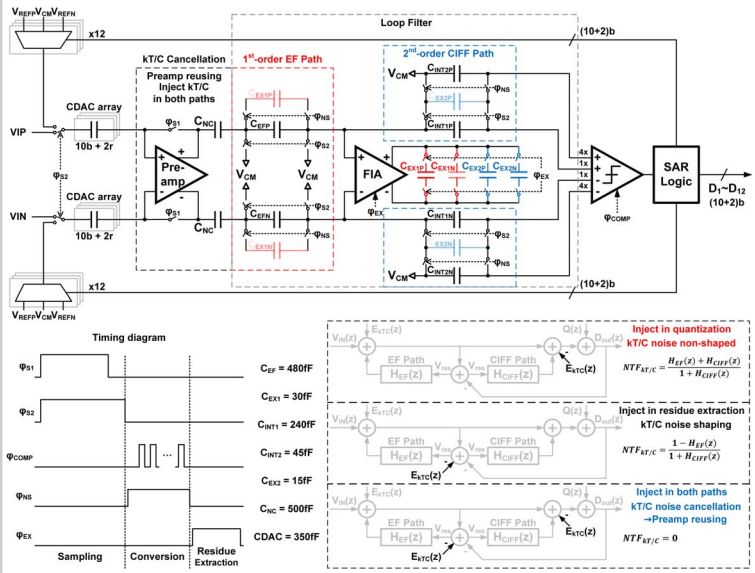

Figure 18.5.3: Circuit implementation of the noise-shaping SAR ADC using the preamp-reusing kT/C noise cancellation technique.

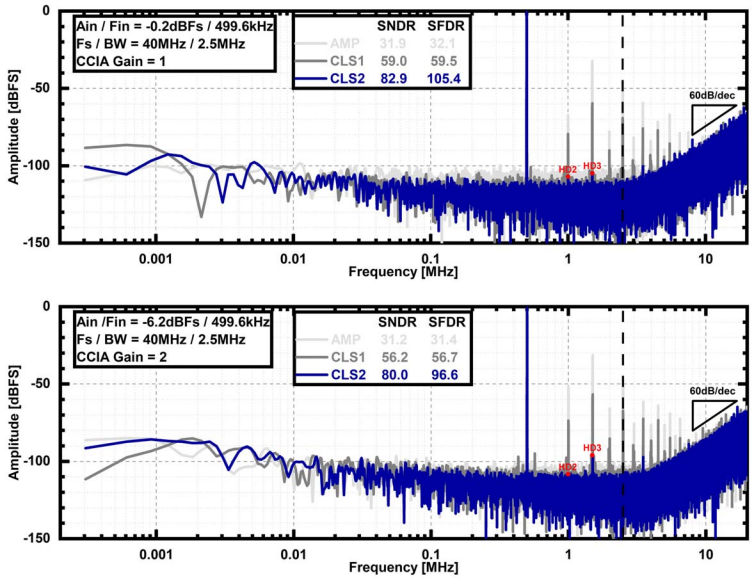

Figure 18.5.4: Measured output spectra (131k-points FFT) under 499.6kHz input signal with the CCIA gain configured as 1 and 2 respectively.

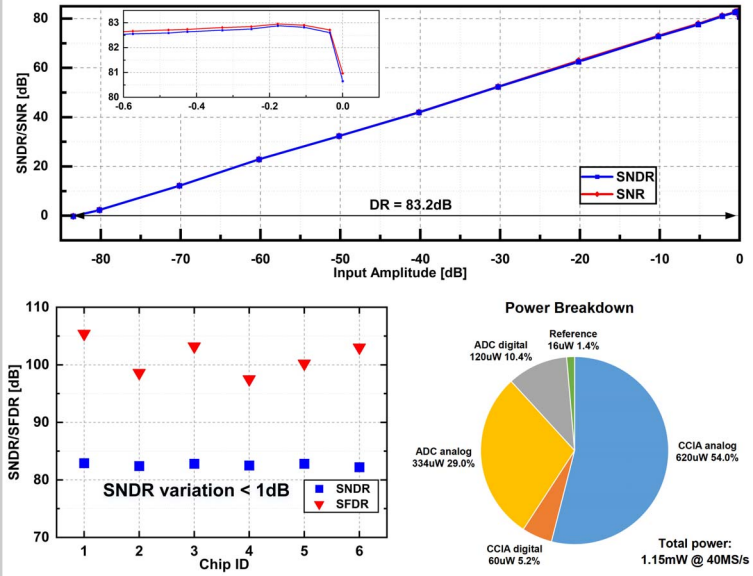

Figure 18.5.5: Measured dynamic range, performance of six chips and power breakdown.

	This work	M. Li [3] ISSCC23	M-J Seo [7] JSSC20	T. Wang [2] ISSCC22	Y.Guo [8] JSSC23	M J.Kramar [6] ISSCC15
Architecture	**NS-SAR**	Pipe-SAR	SAR	NS-SAR	NS-SAR	SAR
Input Buffer	**CCIA PGA compatible**	SF	Loop embedded SF	Loop embedded SF	SF	Loop embedded SF
Process (nm)	**55**	180	180	65	40	40
Supply (V)	**1.2**	1.8/3.3	1.5	1.2/2	1.1/2.5	1.2/2.5
Diff Input Swing (Vpp)	**2.4**	6.6	3	2.4	2.2	2.4
Rail to rail?	**√**	√	√	×	×	×
Area (mm2)	**0.043**	0.6	0.192	0.075	0.36	0.236
Fs (MHz)	**40**	12	5.12	5	60	35
BW (MHz)	**2.5**	6	0.32	0.5	5	17.5
Power (mW)	**0.47/1.15**	9.43/30.41	0.148/0.180	0.074/0.134	1.84/8.06	54.5
SNDR (dB)	**82.9**	91.3	74.8	84.1	84.2	75
SFDR (dB)	**105.4**	99.2	86.1	97	97.3	99
DR (dB)	**83.2**	94.1	-	84.9	86.4	-
FoMw (fJ/step)	**8.2/20.2**	26.2/84.4	51.5/62.6	5.6/10	13.8/60.6	338.8
FoMs (dB)	**180.2/176.3**	179.3/174.2	168.1/167.3	182.4/180	178.6/172.1	160.1

Figure 18.5.6: Comparison table of the state-of-the-art ADCs integrated with input buffers.

Authorized licensed use limited to: Zhejiang University. Downloaded on January 22,2026 at 06:09:42 UTC from IEEE Xplore. Restrictions apply.

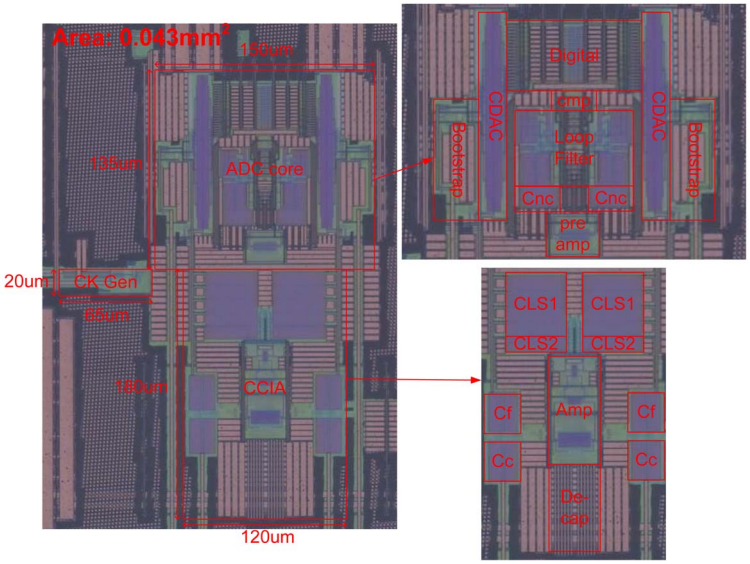

Figure 18.5.7: Chip micrograph.

References:

[1] T. -H. Wang, R. Wu, V. Gupta and S. Li, "A 13.8-ENOB 0.4pF-CIN 3rd-Order Noise-Shaping SAR in a Single-Amplifier EF-CIFF Structure with Fully Dynamic Hardware-Reusing kT/C Noise Cancelation," 2021 IEEE International Solid-State Circuits Conference (ISSCC), San Francisco, CA, USA, 2021, pp. 374-376 .

[2] T. Wang, T. Xie, Z. Liu and S. Li, "An 84dB-SNDR Low-OSR 4th-Order Noise-Shaping SAR with an FIA-Assisted EF-CRFF Structure and Noise-Mitigated Push-Pull Buffer-in-Loop Technique," 2022 IEEE International Solid-State Circuits Conference (ISSCC), San Francisco, CA, USA, 2022, pp. 418-420 .

[3] M. Li et al., "A Rail-to-Rail 12MS 91.3dB SNDR 94.1dB DR Two-Step SAR ADC with Integrated Input Buffer Using Predictive Level-Shifting," 2023 IEEE International Solid-State Circuits Conference (ISSCC), San Francisco, CA, USA, 2023, pp. 1-3.

[4] K. -C. Cheng, S. -J. Chang, C. -C. Chen and S. -H. Hung, "A 94.3dB SNDR 184dB FoMs 4th-Order Noise-Shaping SAR ADC with Dynamic-Amplifier-Assisted Cascaded Integrator," 2024 IEEE International Solid-State Circuits Conference (ISSCC), San Francisco, CA, USA, 2024, pp. 180-182.

[5] R. Bodnar et al., "A 9.3nV/rtHz 20b 40MS/s 94.2dB DR Signal-Chain Friendly Precision SAR Converter," 2024 IEEE International Solid-State Circuits Conference (ISSCC), San Francisco, CA, USA, 2024, pp. 182-184.

[6] M. Kramer, E. Janssen, K. Doris and B. Murmann, "14b 35MS/S SAR ADC achieving 75dB SNDR and 99dB SFDR with loop-embedded input buffer in 40nm CMOS," 2015 IEEE International Solid-State Circuits Conference (ISSCC) Digest of Technical Papers, San Francisco, CA, USA, 2015, pp. 1-3.

[7] M. -J. Seo, D. -H. Jin, Y. -D. Kim, J. -P. Kim and S. -T. Ryu, "A Single-Supply CDAC-Based Buffer-Embedding SAR ADC With Skip-Reset Scheme Having Inherent Chopping Capability," in IEEE Journal of Solid-State Circuits, vol. 55, no. 10, pp. 2660-2669, Oct. 2020.

[8] Y. Guo, J. Jin, X. Liu and J. Zhou, "A 60-MS/s 5-MHz BW Noise-Shaping SAR ADC With Integrated Input Buffer Achieving 84.2-dB SNDR and 97.3-dB SFDR Using Dynamic Level-Shifting and ISI-Error Correction," in IEEE Journal of Solid-State Circuits, vol. 58, no. 2, pp. 474-485, Feb. 2023.

[9] B. R. Gregoire and U. -K. Moon, "An Over-60 dB True Rail-to-Rail Performance Using Correlated Level Shifting and an Opamp With Only 30 dB Loop Gain," in IEEE Journal of Solid-State Circuits, vol. 43, no. 12, pp. 2620-2630, Dec. 2008.

[10] E. Zhian Tabasy, M. Kamarei, S. J. Ashtiani and S. Palermo, "Sequential Correlated Level Shifting: A Switched-Capacitor Approach for High-Accuracy Systems," in IEEE Transactions on Circuits and Systems II: Express Briefs, vol. 60, no. 12, pp. 857-861, Dec. 2013.

[11] J. -C. Wang, T. -C. Hung and T. -H. Kuo, "A Calibration-Free 14-b 0.7-mW 100-MS/s Pipelined-SAR ADC Using a Weighted- Averaging Correlated Level Shifting Technique," in IEEE Journal of Solid-State Circuits, vol. 55, no. 12, pp. 3271-3280, Dec. 2020.

[12] J. -C. Wang and T. -H. Kuo, "A 72-dB SNDR 130-MS/s 0.8-mW Pipelined-SAR ADC Using a Distributed Averaging Correlated Level Shifting Ring Amplifier," in IEEE Journal of Solid-State Circuits, vol. 57, no. 12, pp. 3794-3803, Dec. 2022.

[13] S. Ye et al., "A 2mW 70.7dB SNDR 200MS/s Pipelined-SAR ADC with Continuous-Time SAR-Assisted Detect-and-Skip and Open-then-Close Correlated Level Shifting," 2024 IEEE International Solid-State Circuits Conference (ISSCC), San Francisco, CA, USA, 2024, pp. 168-170.

[14] J. Gao et al., "A 7.9fJ/Conversion-Step and 37.12aFrms Pipelined-SAR Capacitance-to-Digital Converter with kT/C Noise Cancellation and Incomplete-Settling-Based Correlated Level Shifting," 2023 IEEE International Solid-State Circuits Conference (ISSCC), San Francisco, CA, USA, 2023, pp. 346-348.

[15] J. Liu, X. Tang, W. Zhao, L. Shen and N. Sun, "A 13b 0.005mm2 40MS/s SAR ADC with kT/C Noise Cancellation," 2020 IEEE International Solid-State Circuits Conference (ISSCC), San Francisco, CA, USA, 2020, pp. 258-260.

Authorized licensed use limited to: Zhejiang University. Downloaded on January 22,2026 at 06:09:42 UTC from IEEE Xplore. Restrictions apply.

 979-8-3315-4101-9/25/$31.00 ©2025 IEEE