Analysis and Design of a Discrete-Time Delta-Sigma Modulator Using a Cascoded Floating-Inverter-Based Dynamic Amplifier

R. S. Ashwin Kumar, *Member, IEEE*, Nagendra Krishnapura, *Senior Member, IEEE*, and Paramita Banerjee

***Abstract*— This article presents a delta–sigma modulator (DSM) using a cascoded floating-inverter-based dynamic amplifier. The proposed cascoded dynamic amplifier achieves more than 50-dB dc gain while maintaining an HD3 of better than −110 dBc for signal swings less than 300 mV_{ppd}. Compared to the previously reported two-stage floating inverter amplifier (FIA), the cascoded FIA has a lower and a process invariant input-referred noise, making it an ideal choice for high-resolution ADCs. We also show that, when such a single-stage dynamic amplifier, which has a time-varying transconductance, is used in closed-loop switched-capacitor circuits, the settling bandwidth depends on the average transconductance $G_{m,\mathrm{avg}}$ during the settling interval. A detailed analysis reveals that, when the floating inverter structure operates in weak inversion for most of the time (which is the power-efficient way to bias the amplifier), this average transconductance depends strongly on the reservoir capacitance value and only weakly on the transistor dimensions. Besides, it is less sensitive to temperature variations, unlike the transconductance of a conventional OTA biased in weak inversion. We also quantitatively derive and show that the cascoded FIA is more power-efficient than a conventional static-current biased operational transconductance amplifier. Using the cascoded FIA, a discrete-time DSM has been designed and fabricated in a 180-nm CMOS process. The modulator runs at 3.072 MHz while consuming 189 μA from a 1.8-V supply. In a bandwidth of 24 kHz, the measured SNR/SNDR/SFDR is 96.4/96.2/114 dB, respectively.**

***Index Terms*— Analog-to-digital converters, discrete-time delta–sigma modulators (DSMs), dynamic amplifiers, floating inverter amplifiers (FIAs).**

I. Introduction

DELTA–SIGMA modulators (DSMs) are well-suited for realizing high-resolution ADCs in the low-bandwidth regime. Discrete-time DSMs (DTDSMs) realized using switched-capacitor (SC) circuits are robust to PVT variations, immune to clock jitter, and can be operated over a wide range of sampling frequencies. In a DTDSM, the operational transconductance amplifier (OTA) is usually one of the most power-hungry blocks because of the high static current that it draws. This has led to the use of dynamic amplifiers whose operating point varies with time, resulting in a more power-efficient design.

Dynamic amplifiers have been used in the past in pipelined ADCs as a pre-amplifier before comparators [1] and for residue amplification [2]. The idea is to use a differential pair as an open-loop integrator, where the output voltages roll down from V_{dd} with a slope proportional to the input voltage. With such a dynamic amplifier, one could achieve a modest gain of only 10–15 dB. Besides, the gain of the amplifier changes with PVT variations and, hence, requires an external gain calibration when used as an open-loop residue amplifier. Also, since the output voltages eventually drop to zero, the integration must be stopped well before the outputs become zero [3] [4].

Reference [5] is one of the early works to use such a dynamic amplifier in a closed loop to realize an SC integrator for implementing a DTDSM. However, since the dc gain of the amplifier was less than 20 dB, it resulted in the flicker noise of the second stage becoming dominant and suffered from a poor signal-to-noise ratio.

This article presents a cascoded single-stage dynamic amplifier using a floating inverter (proposed in [6]) as the core transconductance unit. Unlike the two-stage OTA realized in [6], the proposed cascoded OTA does not incur an increased input-referred noise. We also show that, in the floating inverter amplifier (FIA), when the transistors operate in weak inversion for the most part, the average transconductance $G_{m,\mathrm{avg}}$, which determines the settling speed, is strongly controlled by the capacitance value used as the "charge-source" to bias the amplifier and is weakly dependent on the device dimensions. Besides, $G_{m,\mathrm{avg}}$ is very much insensitive to absolute temperature. Using the proposed cascoded dynamic amplifier, a third-order DTDSM is designed and fabricated in a 180-nm CMOS process. The rest of the text is organized as follows.

Section II briefly explains the FIA introduced in [6] and motivates the reason for using the proposed cascoded FIA. Section III analyzes closed-loop SC circuits using the cascoded FIA to obtain some design insights and shows the simulation results. Section IV compares the cascoded FIA with the conventional static-current biased OTA and the two-stage FIA

Manuscript received 27 December 2021; revised 15 March 2022 and 20 April 2022; accepted 20 April 2022. Date of publication 18 May 2022; date of current version 24 October 2022. This article was approved by Associate Editor Yunzhi Dong. This work was supported in part by the Ministry of Electronics and Information Technology, Government of India, and in part by the Centre for RF, Analog, and Mixed-Signal ICs, IIT Madras. *(Corresponding author: R. S. Ashwin Kumar.)*

R. S. Ashwin Kumar was with the Electrical Engineering Department, IIT Madras, Chennai 600036, India. He is now with the Electrical Engineering Department, IIT Kanpur, Kanpur 208016, India (e-mail: rsashwinkumar@gmail.com).

Nagendra Krishnapura and Paramita Banerjee are with the Electrical Engineering Department, IIT Madras, Chennai 600036, India.

Color versions of one or more figures in this article are available at https://doi.org/10.1109/JSSC.2022.3171790.

Digital Object Identifier 10.1109/JSSC.2022.3171790

0018-9200 © 2022 IEEE. Personal use is permitted, but republication/redistribution requires IEEE permission.
See https://www.ieee.org/publications/rights/index.html for more information.

Authorized licensed use limited to: Zhejiang University. Downloaded on March 03,2026 at 01:50:16 UTC from IEEE Xplore. Restrictions apply.

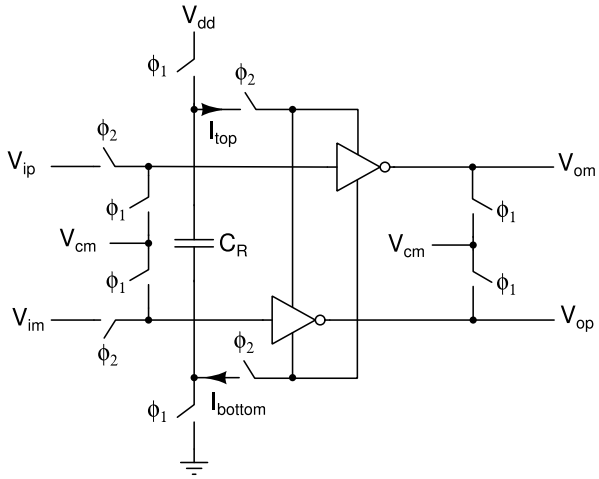

Fig. 1. FIA powered by a reservoir capacitor C_R.

in terms of the input-referred noise and power efficiency. Section V describes how the results from the analyses are used to design the prototype chip. Measurement results are shown in Section VI, followed by the conclusion.

II. Floating Inverter Amplifier

Fig. 1 shows the schematic of a single-stage FIA proposed in [6], which will be referred to as the "*simple FIA*" in the rest of the text. It operates in two phases. During the charging phase ϕ_1, the reservoir capacitor C_R is charged to V_{dd}, while the inverters' inputs and the outputs are reset to the common-mode voltage. During the amplification phase ϕ_2, the capacitor C_R powers the inverters. As current flows through the circuit, the charge stored in C_R gets depleted, and hence, eventually, the inverters shut off, resulting in a self-quenched mechanism [6]. Since C_R acts as a floating battery, the current leaving the top plate of C_R must equal the current that enters the bottom plate, i.e., $I_{\text{top}} = I_{\text{bottom}}$. Hence, there can only be a differential current flowing in the circuit, resulting in a stable output common-mode voltage. However, the dc gain that could be achieved with this single inverter is very modest (less than 20–30 dB). Hence, to increase the dc gain, Tang *et al.* [6] cascaded two such FIAs. Although this two-stage cascade achieves a higher dc gain, the input-referred noise is higher than in a single-stage FIA. If the amplifier is in the amplification phase during a period, say from $t = 0$ to $t = T_s/2$, then following the procedure highlighted in [7], it can be shown that the input-referred in-band noise variance due to the first stage is amplified by a gain factor $\approx G_{m2}(T_s/2)R_{o1}(T_s/2)$. Here, $G_{m2}(T_s/2)$ and $R_{o1}(T_s/2)$ denote the transconductance of the second stage and the output resistance of the first stage, respectively, at the end of the amplification phase. Thus, while designing, it needs to be ensured that this gain does not severely degrade the noise performance. Since, during the amplification phase, currents through the transistors decrease with time, the transconductance decreases with time, while the output resistance increases. In [6], the second stage was designed so that its transconductance $G_{m2}(t)$ reduces faster than the increase in the output resistance $R_{o1}(t)$ of the first stage. Still, the factor $G_{m2}(T_s/2)R_{o1}(T_s/2)$ was ~2, resulting in a 2× increased in-band noise-variance.

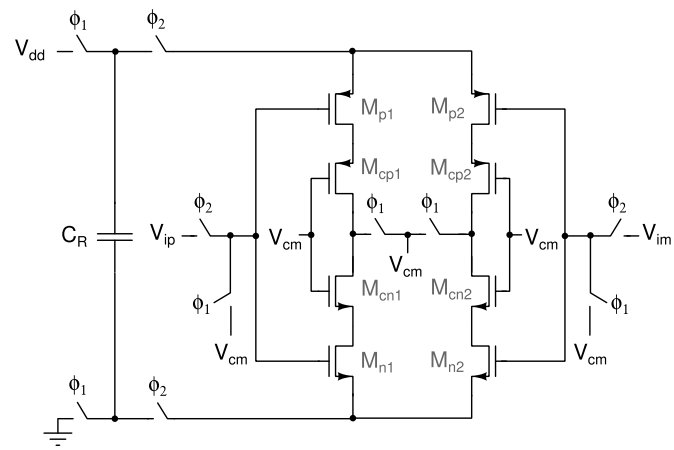

Fig. 2. Schematic of the proposed cascoded dynamic amplifier.

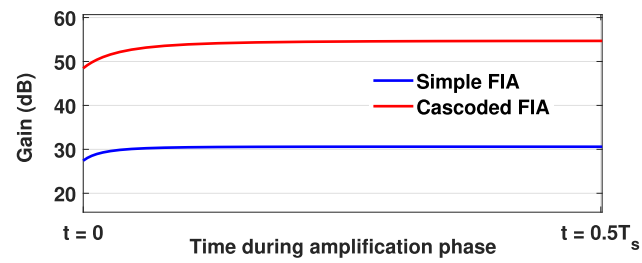

Fig. 3. Time-varying gain of the proposed cascoded FIA and simple FIA.

A. Proposed Cascoded Dynamic Amplifier

Instead of using two stages to increase the gain, in this work, we realize the required high gain (greater than 40 dB) from a single stage, using the cascoded dynamic amplifier, as shown in Fig. 2.[1]

In order to avoid generating additional bias voltages, the gates of the cascode devices ($M_{cn1,2}$ and $M_{cp1,2}$) are connected to $V_{\text{cm}} = V_{\text{dd}}/2$. The cascode devices are sized up to operate in the weak-inversion region. This ensures that the drain voltages of the main transconductors $M_{n1,2}$ and $M_{p1,2}$ are sufficiently high to prevent them from entering the triode region. Instead of wide regular V_{th} devices, one can also use nominally sized low-V_{th} devices, if available in the process.

Fig. 3 shows the time-varying gain during the amplification phase ϕ_2 for both the simple FIA and the proposed cascoded FIA, both having $C_R = 16$ pF. For this simulation, $M_{n1,2}$ and $M_{p1,2}$ have 15 fingers and 45 fingers, respectively, with each finger having a width of 1 μm. The cascode devices $M_{cn1,2}$ and $M_{cn1,2}$ in the proposed cascoded FIA are regular V_{th} devices and are sized to be 30× wider than the corresponding transconductance devices ($M_{n1,2}$ and $M_{p1,2}$). It can be seen that the dc gain is more than 50 dB for the cascode compared to ~30-dB gain with a simple FIA configuration.

The downside of using the cascode is the reduced signal swings for a given linearity. To find the reduction of the signal swings, an SC amplifier was simulated both using the

[1]The same topology was independently proposed in [8].

Authorized licensed use limited to: Zhejiang University. Downloaded on March 03,2026 at 01:50:16 UTC from IEEE Xplore. Restrictions apply.

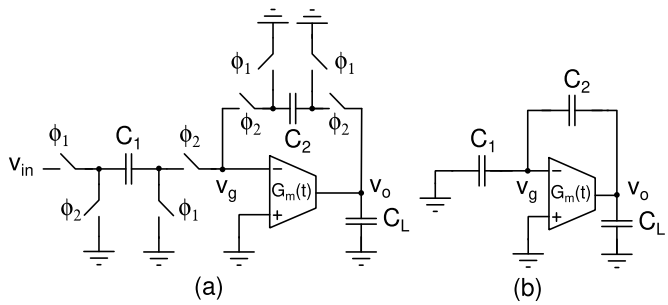

Fig. 4. (a) SC amplifier using a time-varying transconductor. (b) Equivalent circuit during the amplification phase.

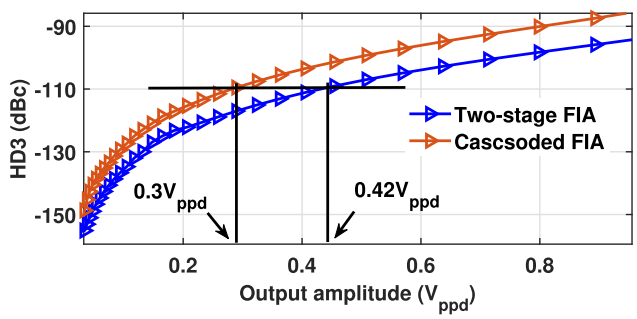

Fig. 5. Simulated HD3 versus the output swing for the SC amplifier in Fig. 4 using the two-stage cascade and the proposed cascoded FIA.

two-stage FIA and with the cascoded FIA. Fig. 4(a) shows the SC amplifier that is simulated, and Fig. 4(b) shows the equivalent circuit during the amplification phase. The values of the capacitors are $C_1 = C_2 = 5$ pF and $C_L = 50$ fF. Fig. 5 shows the simulated HD3 with the two-stage FIA and with the proposed cascoded FIA. The reservoir capacitors used in the two-stage FIA are 12 and 4 pF in the two stages, while the cascoded FIA uses a single capacitor of 16 pF. Both the two-stage and cascoded FIAs have roughly the same dc gain of ~50 dB. As can be seen from Fig. 5, for HD3 < -110 dBc, the supported output swing is around 420 mV with the two-stage FIA, while it is 300 mV with the cascoded FIA. However, this does not pose a severe limitation in a DTDSM, thanks to the input feedforward path [9] and dynamic range scaling of the integrator outputs [10].

III. Closed-Loop Switched-Capacitor Circuits Using the Cascoded FIA

In a DTDSM, the first integrator realized as a closed-loop SC circuit is the crucial block that dominates the noise and linearity of the modulator. Hence, this section analyzes closed-loop SC circuits using the cascoded FIA. For SC circuits using conventional OTAs biased with a fixed voltage or current, the expression for the settling bandwidth is well-known, making the design straightforward. However, this is not the case with dynamic amplifiers biased with a fixed charge, such as the proposed cascoded FIA. This is because the operating point varies periodically over a clock period. In this section, we determine the factors that affect the settling accuracy and the settling speed in SC circuits using the FIA.

A. Settling Bandwidth

Consider a single-stage dynamic amplifier with a time-varying transconductance $G_m(t)$ used to implement an SC amplifier, as shown in Fig. 4(a). Let us assume that, for $0 < t < T_s/2$, ϕ_1 is active, and during $T_s/2 < t < T_s$, we have the charge-transfer phase ϕ_2. To simplify the analysis, we assume an infinite output impedance. The equivalent circuit during the charge-transfer phase ϕ_2 is shown in Fig. 4(b). It should be noted that, even for an SC integrator, the equivalent circuit during the integration phase will be similar to Fig. 4(b), with the only difference being that C_2 stores the previous output voltage. Hence, although we consider an amplifier here, the result that we derive for the settling bandwidth holds good for an SC integrator that would be used in a DTDSM.

In Fig. 4(a), if the voltage sampled by C_1 at the end of the phase ϕ_1 is $v_{\text{in}0}$, then it can be shown that the output voltage at the end of the phase ϕ_2 (say at $t = nT_s$) is

$$v_o(nT_s) = \frac{C_1}{C_2} v_{\text{in}0} + v_{\text{in}0}\left(1 + \frac{C_1}{C_2}\right) \exp\left(-\frac{\beta G_{m,\text{avg}}}{C_{L,\text{tot}}} \frac{T_s}{2}\right) \quad (1)$$

where $\beta = C_2/(C_1 + C_2)$ and $C_{L,\text{tot}} = C_L + C_1C_2/(C_1 + C_2)$.

Hence, the settling error due to the finite settling bandwidth depends on $\exp(-\beta G_{m,\text{avg}} T_s/(2C_{L,\text{tot}}))$, where

$$G_{m,\text{avg}} = \frac{1}{T_s/2} \int_0^{T_s/2} G_m(t)dt \quad (2)$$

is the average transconductance of the OTA during the amplification/charge-transfer phase ϕ_2. In a conventional static-current biased OTA with a constant G_m, the settling error depends on $\exp(-\beta G_m T_s/(2C_{L,\text{tot}}))$.

Thus, with dynamic amplifiers, we need to ensure that the average transconductance $G_{m,\text{avg}}$ over a period of $T_s/2$ is such that the average bandwidth $\omega_{0,\text{avg}} = \beta G_{m,\text{avg}}/C_{L,\text{tot}}$ meets the settling requirement. It should be noted that the instantaneous settling bandwidth, $\omega_{\text{settle}}(t) = \beta G_m(t)/C_{L,\text{tot}}$, indeed, varies over time. We qualitatively expect (and derive quantitatively in Section III-B) that the transconductance at the beginning of ϕ_2 is maximum and reduces as time progresses. Hence, $\omega_{\text{settle}}(t)$ is maximum at the beginning of ϕ_2 and reduces with time. However, the settling error only depends on the average settling bandwidth determined by the average transconductance $G_{m,\text{avg}}$.

B. Average Transconductance $G_{m,avg}$ of the Cascoded Floating Inverter Amplifier

Let us now compute $G_{m,\text{avg}}$ for the cascoded FIA to get a better design perspective. For a conventional amplifier, we compute the transconductance at a fixed operating point where it is biased. Since the FIA has a time-varying operating point, we need to compute the operating point as a function of time and then find the time-varying $G_m(t)$. In the floating inverter configuration, $G_m(t) = G_{mp}(t) + G_{mn}(t)$, where $G_{mn}(t)$ and $G_{mp}(t)$ are the time-varying transconductances of the nMOS and the pMOS, respectively. Thus, to find $G_{mn}(t)$ and $G_{mp}(t)$, we first need to find how the source voltages of the transconducting devices (M_{n1}, M_{p1} in Fig. 2) vary with time.

Authorized licensed use limited to: Zhejiang University. Downloaded on March 03,2026 at 01:50:16 UTC from IEEE Xplore. Restrictions apply.

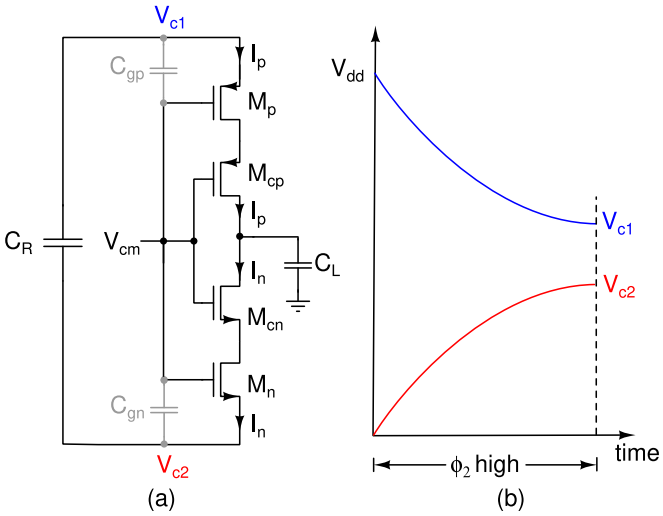

Fig. 6. (a) Equivalent circuit of the proposed cascoded FIA during the amplification phase ϕ_2. Only one differential half is shown for simplicity. (b) Variation of the pMOS and nMOS source voltages with time.

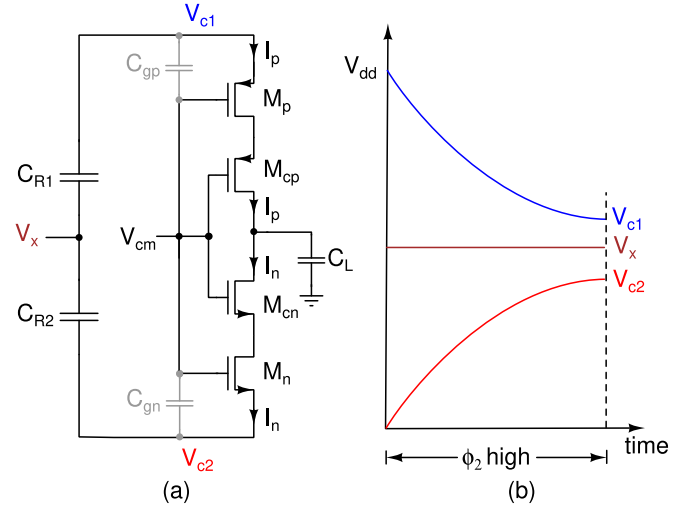

Fig. 7. (a) Splitting C_R into a series combination of C_{R1} and C_{R2} such that V_x remains constant with time. (b) Variation of V_{c1}, V_{c2}, and V_x with time.

For this operating point calculation, we consider the zero input-signal condition, i.e., $V_{\text{ip}} = V_{\text{im}} = V_{\text{cm}} = V_{\text{dd}}/2$ in Fig. 2. Fig. 6(a) shows the equivalent circuit during the amplification phase ϕ_2 (only one differential half is shown for simplicity).

At the start of this amplification phase, the source voltage V_{c1} of pMOS device M_p jumps to V_{dd} (as the top-plate of C_R would have been charged to V_{dd} at the end of ϕ_1), as long as the parasitic capacitance C_{gp} is much smaller than C_R. Similarly, the source of the nMOS transistor M_n drops to close to 0 V at the beginning of the phase, as long as the other parasitics at that node are smaller than C_R. Since the gates of the transistors are at $V_{\text{cm}} = V_{\text{dd}}/2$, the transistors operate with the maximum overdrive voltage. As current flows through the transistors, the voltage V_{c1} starts to drop slowly, while V_{c2} gradually increases, as shown in Fig. 6(b). Depending on whether V_{c1} and V_{c2} fall and rise beyond $V_{\text{cm}} - V_{\text{th},n}$ and $V_{\text{cm}} + |V_{\text{th},p}|$, respectively, the transistors remain in the strong-inversion throughout or enter the weak-inversion region for a part of the interval. Here, $V_{\text{th},n}$, and $V_{\text{th},p}$ are the threshold voltages of nMOS and pMOS, respectively.

Since the voltage V_{c1} at the top plate of C_R reduces with time, while the bottom-plate voltage V_{c2} increases, we can split C_R into a series combination of two capacitors, C_{R1} and C_{R2} [see Fig. 7(a)], such that the voltage V_x at the connecting node between these two capacitors does not vary with time [see Fig. 7(b)]. Thus, we have

$$\frac{C_{R1}C_{R2}}{C_{R1}+C_{R2}} = C_R \tag{3}$$

$$C_{R1}\frac{dV_{c1}}{dt} + C_{R2}\frac{dV_{c2}}{dt} = 0. \tag{4}$$

If we ignore the currents flowing through the gate parasitic capacitors C_{gn} and C_{gp} (as they will be much smaller than the reservoir capacitor C_R), from Fig. 7(a), we can see that the currents through the nMOS and the pMOS transistors are equal. This is enforced by C_R, which acts as a floating battery. The current through C_L is zero because the differential input is zero. In addition, let us assume that the pMOS and nMOS transconductors are sized such that both are equally strong (i.e., the self-bias voltage of the inverter is $V_{\text{cm}} = V_{\text{dd}}/2$). This makes the circuit symmetric and results in $C_{R1} = C_{R2} = 2C_R$ and $V_x = V_{\text{cm}}$.

The KCL equations governing the circuit in Fig. 7(a) are

$$(C_{R1} + C_{gp})\frac{dV_{c1}}{dt} + I_p = 0 \tag{5}$$

$$(C_{R2} + C_{gn})\frac{dV_{c2}}{dt} - I_n = 0. \tag{6}$$

We assume that the cascode devices M_{cn} and M_{cp} are sized up (or they are implemented using low-V_{th} devices) such that they operate in weak inversion and keep the main transconductors M_n and M_p from entering the triode region. Thus, the transistor currents [I_p and I_n in Fig. 7(a)] are determined only by M_p and M_n to a first order. As a result, the cascode devices do not influence the time-varying dc operating point. Hence, the results that we derive for $G_{m,\text{avg}}$ hold good even for the simple FIA.

1) $G_{m,\text{avg}}$ in Strong Inversion: Since the gate capacitances C_{gp} and C_{gn} will be much smaller than the reservoir capacitor C_R, they can be neglected in (5) and (6). If the transistors operate in the strong-inversion region throughout the amplification phase, using the square-law expression for I_p and I_n, it can be shown that

$$G_{mp,\text{si}}(t) = G_{mn,\text{si}}(t) = G_{m,\text{si}}(t) = \frac{G_{m0,\text{si}}}{(1 + t/\tau_{0,\text{si}})} \tag{7}$$

where

$$\tau_{0,\text{si}} = 2C_R/G_{m0,\text{si}} \tag{8}$$

and $G_{m0,\text{si}}$ is the transconductance of M_n and M_p at the beginning of the amplification phase, when the gate–source voltage is equal to V_{cm}. Hence, the average G_m of the cascoded FIA (and the simple FIA) when it operates in strong-inversion

Authorized licensed use limited to: Zhejiang University. Downloaded on March 03,2026 at 01:50:16 UTC from IEEE Xplore. Restrictions apply.

region throughout the amplification phase can be calculated to be

$$G_{m,\text{avg,si}} = \frac{8C_R}{T_s}\ln\left(1+\frac{T_s}{2\tau_{0,\text{si}}}\right). \tag{9}$$

If $\tau_{0,\text{si}} \gg T_s/2$, $\ln(1+T_s/(2\tau_{0,\text{si}}))$ can be approximated as $T_s/(2\tau_{0,\text{si}})$, which gives $G_{m,\text{avg,si}} \approx 2G_{m0,\text{si}}$. This makes sense because, for very large values of C_R, we expect the amplifier to behave as if it is powered by an ideal voltage source with a value V_{dd}, and hence, it will have a constant G_m equal to $2G_{m0,\text{si}}$.

2) $G_{m,avg}$ When Transistors Operate in Weak Inversion for the Most Part: The more power-efficient way to bias the cascoded FIA is to let the transistors operate in weak inversion for most of the time. We assume that the transistors enter the weak-inversion region after n_0 time constants, i.e., $t = n_0\tau_{0,si}$, and n_0 is a real number.[2] The time-varying transconductance of the transistors in weak inversion can be computed to be

$$G_{m,wi}(t) = \frac{G_{m0,\text{wi}}}{1+(t-n_0\tau_{0,\text{si}})/\tau_{0,\text{wi}}} \tag{10}$$

where $\tau_{0,\text{wi}} = 2C_R/G_{m0,\text{wi}}$ is the time constant during the weak-inversion region, and $G_{m0,wi}$ is the transconductance of the pMOS and the nMOS when they just enter weak inversion. The average transconductance can, thus, be calculated to be

$$G_{m,\text{avg}} = \frac{8C_R}{T_s}\ln\left((1+n_0)\left(1+\frac{T_s/2-n_0\tau_{0,\text{si}}}{\tau_{0,\text{wi}}}\right)\right). \tag{11}$$

In the above equation, the first term in the argument, $1+n_0$, is due to the operation in the strong-inversion operation, while the second term is due to the weak-inversion operation. Since $G_{m0,\text{wi}}$ is the transconductance at the onset of weak inversion, i.e., at $t = n_0\tau_{0,si}$, from (7), $G_{m0,\text{wi}} = G_{m0,\text{si}}/(1+n_0)$. Thus, $\tau_{0,\text{wi}} = C_R/G_{m0,\text{wi}} = (1+n_0)C_R/G_{m0,\text{si}} = (1+n_0)\tau_{0,\text{si}}$. Thus,

$$G_{m,\text{avg}} = \frac{8C_R}{T_s}\ln\left((1+n_0)\left(1-\frac{n_0\tau_{0,\text{si}}}{\tau_{0,\text{wi}}}+\frac{T_s}{2\tau_{0,\text{wi}}}\right)\right) \tag{12}$$

$$= \frac{8C_R}{T_s}\ln\left((1+n_0)\left(1-\frac{n_0}{n_0+1}+\frac{T_s}{2\tau_{0,\text{wi}}}\right)\right). \tag{13}$$

Since $n_0 \gg 1$ (from simulations n_0 was found to be >5)

$$G_{m,\text{avg}} \approx \frac{8C_R}{T_s}\ln\left(\frac{T_s}{2\tau_{0,\text{si}}}\right). \tag{14}$$

Although (14) looks similar to (9), $G_{m,\text{avg}}$ for the strong-inversion case, there is one crucial difference. The argument of the ln() function, $T_s/(2\tau_{0,\text{si}})$, is very much smaller than unity for the strong-inversion case. Thus, there is no compression due to the ln() function, and so the value of $G_{m,\text{avg}}$ saturates to $2G_{m0,\text{si}}$, as explained earlier, whereas, when the transistors operate mostly in weak inversion, we need to have $\tau_{0,si} \ll T_s/2$, implying that the argument will be very much greater than unity. Hence, the effect of this argument will be compressed a lot by the ln() function.

[2]If $V_{\text{dd}}/2 > V_{\text{th},n}, V_{\text{th},p}$, the transistors always start in strong inversion. This is typically the case. If the devices start off in weak inversion due to low V_{dd}, the expressions in the rest of this section will be valid with $n_0 = 0$.

C. Strong Dependence of $G_{m,avg}$ on C_R and Insensitivity to Device Sizes

It is clear from (14) that the average transconductance of the FIA, when it operates in weak inversion for the most part, is a strong function of the reservoir capacitance value. The dependence of $G_{m,\text{avg}}$ on the device dimensions in (14) is not explicit but is captured through the time constant $\tau_{0,\text{si}}$. From (8), we see that this time constant $\tau_{0,\text{si}}$ depends on $G_{m0,\text{si}}$, the transconductance at the beginning of the amplification phase, which, in turn, depends on the device dimensions. However, the effect of the device dimensions is compressed by the ln() function, making the average transconductance weakly dependent on the device sizes and a strong, and approximately, linear function of C_R, with a slope given by $8k_0/T_s$, where $k_0 = \ln(T_s/(2\tau_{0,\text{si}}))$.

D. Insensitivity of $G_{m,avg}$ to Temperature

From (14), we can observe that the only parameter that depends on the temperature is $\tau_{0,\text{wi}}$. Again, due to the log compression, $G_{m,\text{avg}}$ is largely independent of the absolute temperature as well. Intuitively, we can understand this as follows. In weak inversion, the time-varying G_m follows $G_m(t) = G_{m0,\text{wi}}/(1+t/\tau_{0,\text{wi}})$. That is, $G_m(t)$ starts from $G_{m0,\text{wi}}$ and falls off with a time constant $\tau_{0,\text{wi}} = C_R/G_{m0,\text{wi}}$. With temperature, if $G_{m0,wi}$ increases, $G_m(t)$ starts with a higher value, but, at the same time $\tau_{0,\text{wi}}$ reduces. Hence, $G_m(t)$ falls more rapidly, and the area under $G_m(t)$ does not vary much. This is in stark contrast to a conventional OTA biased at a fixed current and operating in weak inversion, where the transconductance is inversely proportional to the absolute temperature ($G_m \propto I_d/(kT/q)$).

The same result can be derived as follows. In the FIA, we have the nMOS and the pMOS transconductors discharging the capacitor C_R. When the transistors operate in the weak-inversion region, this scenario is analogous to a diode discharging a capacitor (Fig. 8 depicts it for the nMOS; a similar equivalent circuit can be drawn for the pMOS as well). For a diode current $I_D(t)$, the transconductance is $G_m(t) = I_D(t)/V_T$. From Fig. 8, $I_D(t) = -dQ(t)/dt$, where $Q(t)$ is the capacitor charge. Thus, the average transconductance (due to both nMOS and the pMOS) over a time interval $T_s/2$ is

$$G_{m,\text{avg}} = 2\times\frac{2}{T_s}\frac{Q(0)-Q(T_s/2)}{V_T} = \frac{8C_R}{T_s}\frac{\Delta V_D}{V_T}$$

where $\Delta V_D = V_D(0) - V_D(T_s/2)$ is the voltage change over an interval $T_s/2$ when a diode discharges through a capacitor. ΔV_D is shown in [11] to be equal to $nV_T\ln(I_sT_s/(4C_RnV_T))$ and approximately proportional to absolute temperature (PTAT). Thus, $G_{m,\text{avg}}$ that depends on the ratio of this PTAT voltage ΔV_D and the thermal voltage V_T will be independent of the temperature. Thus, when the FIA is used to build an SC integrator, the settling speed will remain the same across temperature. This increases the robustness of an SC integrator, which is already less sensitive to the tolerance in the capacitance values.

E. Simulation Results

As can be seen from (14), $G_{m,\text{avg}}$ is a strong function of the reservoir capacitance value and only weakly depends on

Authorized licensed use limited to: Zhejiang University. Downloaded on March 03,2026 at 01:50:16 UTC from IEEE Xplore. Restrictions apply.

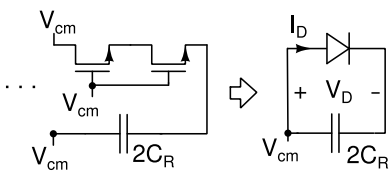

Fig. 8. Modeling the nMOS transconductor in Fig. 7 operating in weak inversion as an equivalent diode.

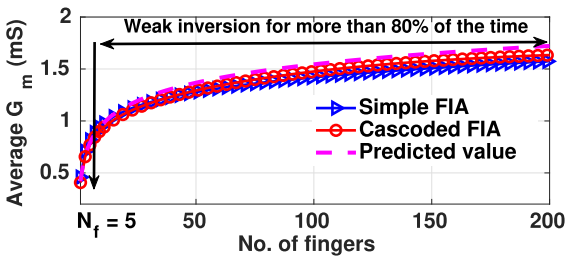

Fig. 9. Variation of $G_{m,\text{avg}}$ with the transistor width. Each finger has a width of 1 μm.

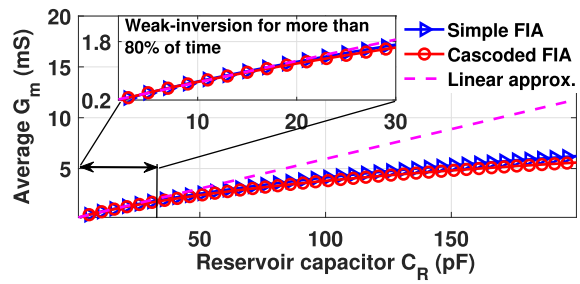

Fig. 10. Variation of $G_{m,\text{avg}}$ with the reservoir capacitor C_R. For $C_R < 30$ pF (inset), the transistors are in weak inversion for >80% of the time.

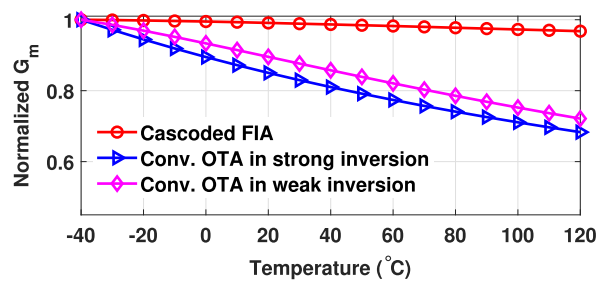

Fig. 11. Normalized $G_{m,\text{avg}}$ versus temperature for the cascoded FIA and conventional static-current biased OTA.

the transistor dimensions. To verify the weak dependence on device sizes and strong dependence on C_R, $G_{m,\text{avg}}$ of a simple FIA and the proposed cascoded FIA was simulated by varying the value of C_R and the device dimensions. Fig. 9 shows the variation of $G_{m,\text{avg}}$ as the number of fingers of the nMOS transistor M_n is varied from 1 to 200. The finger width was fixed to 1 μm. The pMOS device M_p has three times as many number fingers as the nMOS M_n. The cascode devices M_{cn} and M_{cp} are sized to be 30× wider than M_n and M_p, respectively. The reservoir capacitance value is $C_R = 16$ pF. As shown in Fig. 9, till $N_f = 5$, the transistors operate in strong inversion for more than 20% of the time, and $G_{m,\text{avg}}$ increases with N_f. Beyond that, i.e., for $N_f > 5$, we see that, even for a 40× increase in the number of fingers, $G_{m,\text{avg}}$ only increases by 1.6×. As expected, $G_{m,\text{avg}}$ is almost equal for both the simple FIA and the cascoded FIA.

Fig. 10 shows the variation of $G_{m,\text{avg}}$ as the value of C_R varies from 0.5 to 200 pF. For this simulation, M_n and M_p have widths of 15×1 and 45×1 μm, respectively. The transistors operate in weak inversion for more than 80% of the time for $C_R < 30$ pF. In this region, as the analysis predicts, C_R exerts a much stronger control over $G_{m,\text{avg}}$, and the dependence is almost linear, with $k_0 \approx 2.3$, as can be seen from the inset of Fig. 10. Beyond $C_R = 30$ pF, the transistors spend more time in the strong-inversion region, $G_{m,\text{avg}}$ stops increasing linearly, and the value begins to saturate slowly to $2G_{m0,\text{wi}} \approx 7$ mS. We further observed that the slope k_0 that relates $G_{m,\text{avg}}$ to C_R changes only from 2 to 4 when the number of fingers of the nMOS M_n is varied from 10 to 100 (with other devices scaled appropriately).

To confirm the temperature insensitivity, we simulated the $G_{m,\text{avg}}$ of the cascoded FIA operating mostly in weak inversion and a conventional tail-current biased differential pair, operating both in strong inversion and in weak inversion. All the three OTAs were designed to have an average G_m of 1 mS. The normalized G_m versus temperature is plotted in Fig. 11. It can be seen that $G_{m,\text{avg}}$ of the cascoded FIA varies by less than 3% when the temperature is varied from −40 °C to 120 °C, whereas, for the static current biased OTA, $G_{m,\text{avg}}$ varies by 32% for the strong inversion case and 28% for the weak inversion case.

IV. Comparison of the Cascoded FIA With Other OTA Topologies

To understand the efficacy of the cascoded FIA, we compare it with the two-stage cascade, simple FIA, and a conventional OTA in terms of noise and power.

A. Noise

With a conventional static-current biased OTA, the input-referred in-band noise of an SC integrator will be approximately $2kT\gamma/C_{\text{in}}$ [12], where it is assumed that the ON-resistance of the switches is small, and the settling time constant is determined by G_m of the OTA. With the simple FIA and the cascoded FIA, although the transconductance is time-varying, it can be shown that the result is similar. However, when the two-stage FIA is used, as discussed in Section II and also highlighted in [6], the input-referred noise due to the first stage will be magnified by a factor $A_2(T_s/2) = G_{m2}(T_s/2)R_{o1}(T_s/2)$, where $G_{m2}(T_s/2)$ and $R_{o1}(T_s/2)$ are the transconductance of the second stage and the output resistance of the first stage, respectively, at the end of the charge transfer phase. In order to minimize $A_2(T_s/2)$, it needs to be ensured that the second stage shuts off faster compared to the first stage, i.e., the reservoir capacitance C_{R2} of the second stage must be smaller than that of the first stage (C_{R1}). It should be noted that this amplification factor $A_2(T_s/2)$ is a process-dependent parameter, as it depends on how both G_{m2} and R_{o1} vary with time. From our analysis in Section III-B, it is

Authorized licensed use limited to: Zhejiang University. Downloaded on March 03,2026 at 01:50:16 UTC from IEEE Xplore. Restrictions apply.

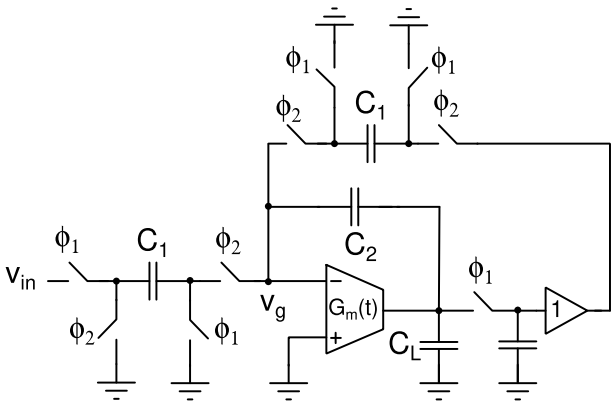

Fig. 12. SC integrator in unity feedback for simulating the noise of the OTA. The transient noise simulation is run for both the two-stage FIA and the cascoded FIA.

clear that the time constant with which G_m decays depends on $G_{m0,\mathrm{wi}}$, which is the transconductance at the onset of weak inversion and is a process-dependent parameter. Similarly, R_{o1} is a process-dependent parameter, and hence, input-referred noise with the two-stage FIA will be sensitive to any kind of process variations. This is unlike the conventional OTA or the cascoded FIA, where the input-referred noise is process-independent and equal to $2kT\gamma/C_{\mathrm{in}}$.

To validate our claim about the increased input-referred noise, the noise of the SC integrator was simulated by forming unity feedback around the integrator, as shown in Fig. 12. A transient noise simulation is then run to estimate the input-referred noise. The sampling capacitance was chosen as $C_1 = C_2 = 5.6$ pF, while the sampling rate is chosen to be $f_s = 3.072$ MHz for an ENOB ≈ 16 bits in the audio bandwidth (see Section V). For an output swing of 300 mV, it was found from simulations that C_{R2} had to be at least 4 pF to ensure that the output of the integrator settles within a half-clock cycle. With this choice, it was found that the overall input-referred noise of the integrator was 6 dB higher compared to using a cascoded FIA or the conventional OTA.

Thus, the cascoded FIA is the best choice for high-resolution ADCs, such as this design. A two-stage cascade might be considered for medium-resolution high-speed ADCs since the sampling capacitance needed is smaller, reducing the value of C_{R2}. This will, in turn, make the second stage turn off faster than the first stage, thereby suppressing the effect of this noise amplification. The other advantage of the cascoded FIA is that the input-referred noise is not process dependent, and there is no additional care needed in the design to ensure stability.

B. Power and Non-Linearity

From Section IV-A, it is clear that both the conventional FIA and the cascoded FIA or the simple FIA fare similarly with respect to the input-referred noise. The motivation for choosing a cascoded FIA over the simple FIA is trivial, as the former has a higher dc gain. In this section, we quantitatively derive and show that the cascoded FIA is more power-efficient than a conventional OTA, making it an ideal choice for high-resolution ADCs.

Let us consider that a conventional OTA biased at a fixed current I_{static} is used to realize the SC integrator/amplifier, as shown in Fig. 4. If we require a given $G_{m,\mathrm{avg}} = G_{m0}$, and if the transconductor is biased in weak inversion, then $G_{m0} = I_{\mathrm{static}}/(nV_T)$. The minimum current needed in the opamp is, hence, $I_{\mathrm{static}} = nG_{m0}V_T$. Biasing at this minimum current will, however, result in severe slewing [13]. In Fig. 4, if the load capacitance C_L is much smaller than C_1 and C_2, which is usually the case in a DSM (as the sampling capacitor of the successive stages can be scaled down), it can be shown that [13], for a maximum input voltage of $V_{\mathrm{in,max}}$, if the time allotted for slewing is t_{slew}, the bias current (for a fully differential implementation) has to be

$$I_{\mathrm{static}} \approx 2\frac{G_{m0}V_{\mathrm{in,max}}}{1 + t_{slew}/\tau_{\mathrm{settle}}} \tag{15}$$

where τ_{settle} is the time constant during the linear settling phase. If $t_{\mathrm{slew}} \approx T_s/2$ (an extremely optimistic scenario), then $I_{\mathrm{static}} = 2G_{m0}V_{\mathrm{in,max}}/(1+n_{\mathrm{settle}})$, where n_{settle} is the number of time constants τ_{settle} available in the settling interval of $T_s/2$. If $V_{\mathrm{in,max}} = V_{\mathrm{dd}}$, and if $n_{\mathrm{settle}} \gg 1$, then

$$I_{\mathrm{static}} = 2G_{m0}V_{\mathrm{dd}}/n_{\mathrm{settle}}. \tag{16}$$

Let us now consider the power consumption when an FIA is used. It should be noted that, since, in the FIA, the current is not fixed, slewing is inherently avoided. This, in turn, makes the cascoded FIA have inherently higher linearity than the conventional OTAs. Hence, the current will be fixed by the required $G_{m,\mathrm{avg}}$, which, in turn, depends on the reservoir capacitor C_R. From (14), $G_{m,\mathrm{avg}} \approx 8k_0C_R/T_s$, where $k_0 = \ln(0.5T_s/\tau_{0,\mathrm{si}})$. For the FIA, power is consumed only in charging the reservoir capacitor C_R. In each clock cycle, C_R gets charged from $V_{c1}(T_s/2) - V_{c2}(T_s/2)$, i.e., the voltages at the end of the amplification phase, to V_{dd} in the charging phase. At the end of the amplification phase, it can be shown that $V_{c1} - V_{c2} = (V_{\mathrm{th},n} + |V_{\mathrm{th},p}| - 3k_0V_T)$, where $V_T = kT/q$, and it is assumed that the non-ideality factor $n = 1.5$ in the expression for the weak-inversion current [14]. Hence, the average current drawn from the supply will be $C_R(V_{\mathrm{dd}} - (V_{c1} - V_{c2}))/T_s$. For most practical designs, we observed that k_0 would mostly be between 2 and 4. Let us assume that $k_0 = 3$. With this, the average current drawn from the supply can be found to be

$$I_{\mathrm{FIA}} = (V_{\mathrm{dd}} - (V_{\mathrm{th},n} + |V_{\mathrm{th},p}|) - 9V_T)G_{m0}/24. \tag{17}$$

For the chosen 180 nm process, $(V_{\mathrm{th},n}+|V_{\mathrm{th},p}|)-9V_T \approx V_{dd}/2$, and hence, $I_{\mathrm{FIA}} \approx G_{m0}V_{\mathrm{dd}}/48$. Thus,

$$\frac{I_{\mathrm{static}}}{I_{\mathrm{FIA}}} = \frac{96}{n_{\mathrm{settle}}}. \tag{18}$$

Even though from (18), it appears that, having $n_{\mathrm{settle}} > 96$ will make the static-biased OTA more power-efficient, and this would require a large G_m value ($\approx$3 mS, in this case); from (16), the current in each differential half is 54 μA. This will, hence, result in a large G_m/I_d (>53 V^{-1} in this case). Biasing an MOS transistor at such a large G_m/I_d results in a poor distortion [15], and hence, this is not a practical choice.

Authorized licensed use limited to: Zhejiang University. Downloaded on March 03,2026 at 01:50:16 UTC from IEEE Xplore. Restrictions apply.

TABLE I
COMPARISON OF THE OTA TOPOLOGIES

Parameter	Static bias cascoded inverter	Simple FIA	Two-stage FIA	Cascoded FIA
DC gain	$(G_m R_o)^2$	$G_m R_o$	$(G_m R_o)^2$	$(G_m R_o)^2$
Input-referred noise	kT/C	kT/C	$kT/C \times A_2(T_s/2)$ where $A_2(t) = G_{m2}(t)R_{o1}(t)$	
Static current	yes	no	no	no

To verify this power advantage, the SC amplifier [Fig. 4(a) with C_2 reset during ϕ_1] was simulated using the cascoded dynamic amplifier and a static-biased OTA, both with $G_{m,\text{avg}} = 1.1$ mS. The design parameters were $f_s = 3.072$ MHz, $C_1 = 5.6$ pF, and $C_2 = 67$ pF, resulting in $n_{\text{settle}} = 32$. Thus, for a full-scale input amplitude of 3.6 V_{ppd}, the output swing was less than 300 mV_{ppd}. The static-biased OTA was modeled as an ideal voltage-controlled current source with a current limit. It was found that, for a total-harmonic distortion (THD) < -110 dBc, the required current was >180 μA. On the other hand, when a complete transistor-level cascoded dynamic amplifier with the same $G_{m,\text{avg}} = 1.1$ mS is used, the required reservoir capacitance value was $C_R = 16$ pF, and the current consumption was only 48 μA. In this case, that the dynamic amplifier is at least 4× more power-efficient than a static-biased OTA. Although the FIA is more power-efficient than the conventional OTAs, the downside to using the FIA or the cascoded FIA is the area overhead associated with the reservoir capacitor.

Table I summarizes and compares the proposed cascoded FIA with a static-current biased cascoded OTA, simple FIA, and the two-stage FIA. The FIAs have a better power efficiency compared to the conventional OTA. Among the FIAs, the cascoded FIA combines the higher dc gain of the two-stage cascade while maintaining the same input-referred noise as that of the simple FIA, making it an ideal choice for high-resolution SC ADCs.

V. DESIGN DETAILS AND CIRCUIT IMPLEMENTATION

Using the proposed cascoded dynamic amplifier, a DTDSM was designed. The DTDSM was designed for a 24-kHz bandwidth with a sampling rate of 3.072 MHz or an oversampling ratio of 64.

A. Loop Filter

The loop filter is realized as a third-order cascade-of-integrator-in-feedforward (CIFF) structure, having an out-of-band gain of 2.8. This guarantees a signal-to-quantization noise ratio (SQNR) of greater than 110 dB. Fig. 13 shows the complete block diagram of the modulator. The input-referred thermal noise power with the cascoded FIA is approximately

$$N_{\text{in,thermal}} \approx \frac{1}{\text{OSR}} \frac{16kT}{C_{\text{in}}}$$

where C_{in} is the input sampling capacitance. The maximum stable amplitude (MSA) of the modulator is around -1.7 dBFS, where the full scale corresponds to 3.6 V_{ppd}. Thus, for a target SNDR of 96 dB, the input-referred in-band thermal noise power must be around -98 dBFS, which translates to having an input capacitance of $C_{\text{in}} = 5.6$ pF.

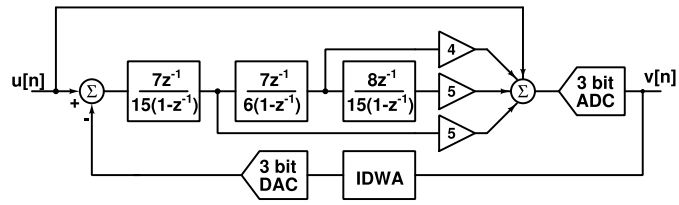

Fig. 13. Block diagram of the implemented DTDSM.

B. Design of the FIAs

All the three integrators in the loop filter use the cascoded FIA. Since the sampling rate is $f_s = 3.072$ MHz, we choose the settling bandwidth ($\approx G_{m,\text{avg}}/C_{\text{in}}$) in the first integrator to be greater than 30 MHz, resulting in a $G_{m,\text{avg}} \approx 1.1$ mS. As can be seen from (14), $G_{m,\text{avg}}$ is strongly controlled by the reservoir capacitance value and only has a weak dependence on the transistor dimensions. Thus, to coarse-tune $G_{m,\text{avg}}$, the parameter that should be first tweaked should be C_R. Using (14) with $k_0 = \ln(0.5T_s/\tau_{0,\text{si}}) \approx 3$, we find the reservoir capacitance value for the cascoded FIA in the first integrator to be 16 pF. The transconducting devices in the FIA are then sized so that they operate in weak inversion for most of the time, i.e., $\tau_{0,\text{si}} = 2C_R/G_{m0,\text{si}}$ is a very small fraction of $T_s/2$. Since $G_{m0,\text{si}}$ is the transconductance at the beginning of the amplification phase, i.e., when the gate–source voltage is equal to V_{cm}, we fix the device dimensions from the transistor characteristic plot of G_m/W versus $V_{\text{gs}} - V_{\text{th}}$. With $C_R = 16$ pF, simulation results confirm that $G_{m,\text{avg}}$ is, indeed, close to the required value of 1.1 mS. The FIA is also chopped at $f_s/2$ to suppress the effect of flicker noise.

For the second and third integrators, the sampling capacitors are chosen to be around at least 30× smaller than C_{in}. Hence, the cascoded FIAs in these integrators use a 10× scaled version of the FIA in the first integrator and, hence, use a reservoir capacitor of 1.6 pF. The output of the loop filter is scaled by a factor of three so that the summing amplifier does not need to swing rail-to-rail. This limits the swings at the summing amplifier output to 600 mV_{ppd}. Since the cascoded FIA cannot support this swing (see Fig. 5), a two-stage cascaded FIA [6] is used. The first stage in this two-stage cascade uses C_R of 3 pF, and to ensure the stability of this cascade, the second stage uses a lower capacitance of 1.5 pF [6].

The input sampling switch is bootstrapped [25] to maximize the linearity. In addition, the loop filter uses an input

Authorized licensed use limited to: Zhejiang University. Downloaded on March 03,2026 at 01:50:16 UTC from IEEE Xplore. Restrictions apply.

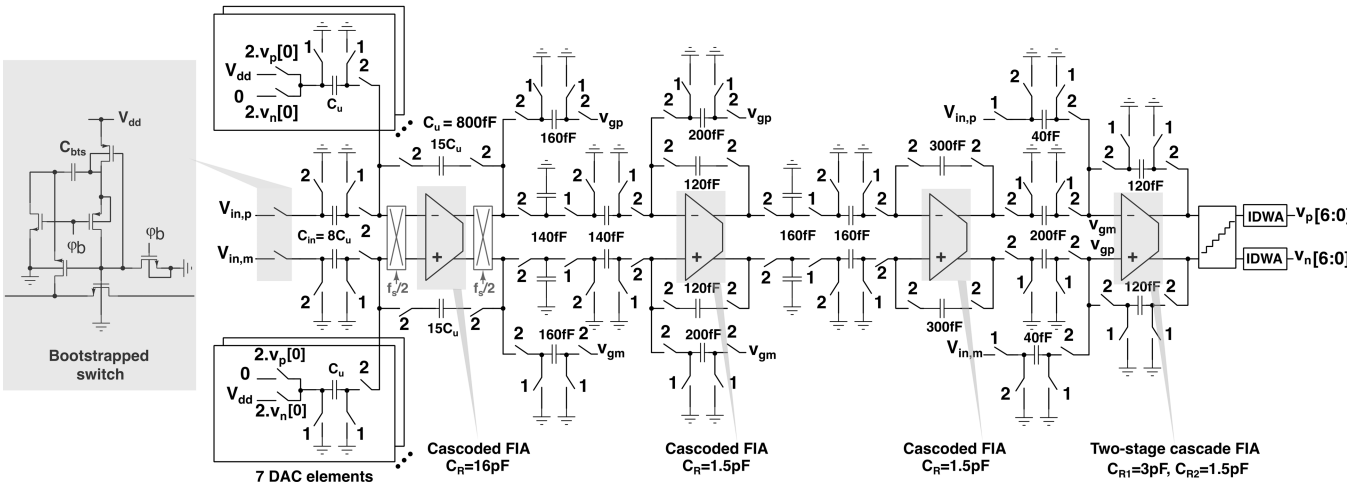

Fig. 14. Top-level schematic of the DSM.

feedforward path [9] to ensure that there is negligible signal swing at the integrator outputs, which, in turn, improves the linearity of the loop filter. The integrator outputs are then dynamic-range scaled [10] so that the cascoded FIA output swings are restricted to 300 mV_{ppd} for further maximizing the linearity (see Fig. 5). Since the sampling capacitors in the second integrator are already chosen to be at least 30× smaller than the sampling capacitor, an increase in this capacitance value due to dynamic range scaling does not change the settling bandwidth of the first integrator [$C_L \ll C_1$ in (1)]. Hence, this does not require increasing $G_{m,\text{avg}}$ of the first integrator, and so there is no increase in the power consumption as well.

The dynamic amplifier is usable only in one half of the clock period. All the opamps are configured so that they amplify in ϕ_2 and are reset in ϕ_1. To implement the delayed integration ($z^{-1}/(1-z^{-1})$), the output of the opamp is used to charge a capacitor in ϕ_2. This charge is transferred to another capacitor in ϕ_1. The second capacitor is used to drive the following opamp (used to realize the integrator) in ϕ_2. This process results in a scaling factor, which in this design is 0.5. The integrator coefficients shown in the block diagram (see Fig. 13) include this scaling factor.

C. Quantizer and DAC

A three-bit flash ADC is used as the coarse quantizer, and the comparators are realized using a strong-arm latch [26]. Since the loop filter output is scaled down by a factor of three, the flash references are also scaled down appropriately to restore the loop filter transfer function. This reduces the differential input to the comparator and, hence, increases the regeneration time. Thus, a half-clock cycle delay ($T_s/2$) is allotted for the comparator and the DWA, and this delay is compensated by configuring the DAC switches to perform a delay-free integration, as shown in Fig. 14. In order to tackle the mismatch of the seven-level DAC, incremental data-weighted averaging (IDWA) [27] is employed, which shapes the DAC mismatch out-of-band. Fig. 14 shows the complete schematic.

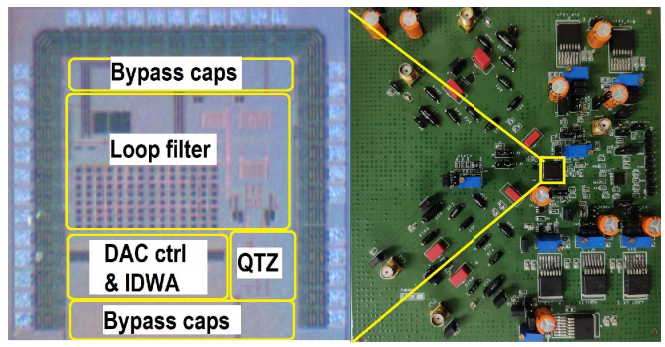

Fig. 15. Chip micrograph and the test board used to characterize the chip.

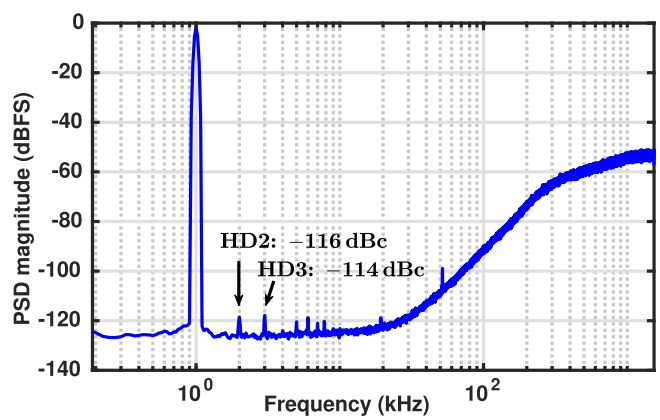

Fig. 16. Measured spectrum of the DSM output with a 1-kHz sinusoid at −1.7 dBFS.

VI. Measurement Results

The prototype chip was designed and fabricated in a 180-nm CMOS process. It has an active area of 0.8 mm^2. Fig. 15 shows the snapshot of the chip layout and the test board used to characterize the chip. The ADC consumes 340 μW of power from a 1.8-V supply. The power split-up is given as follows: loop filter: 111 μW, IDWA & Flash: 63 μW, DAC: 40 μW, and clock-generator: 126 μW.

Fig. 16 shows the 120k point, 20× averaged power spectral density of the DSM output when it is excited with a 1-kHz

Authorized licensed use limited to: Zhejiang University. Downloaded on March 03,2026 at 01:50:16 UTC from IEEE Xplore. Restrictions apply.

TABLE II
PERFORMANCE SUMMARY AND COMPARISON

Parameter	**This work**	JSSC [16]	JSSC [17]	ASSCC [5]	JSSC [18]	JSSC [19]	TCAS1 [20]	ESSCIRC [21]	JSSC [22]	ASSCC [23]	TCAS1 [24]	TCAS-II [8]
Year		2020	2019	2016	2021	2017	2018	2016	2015	2017	2016	2021
Type	**DT Cascoded FIA**	DT Dynamic amp.	DT Dynamic amp.	DT Dynamic amp.	CT Chopped neg. R	DT Zoom ADC	DT Inverter amp.	DT	DT	DT Inverter amp.	DT Inverter amp.	DT Cascoded FIA
Process (nm)	**180**	65	65	65	65	160	180	180	130	180	180	65
Supply (V)	**1.8**	0.8	1	1	1.2	1.8	1.8	1.8	1.8	1.8	1.8	1
B.W. (kHz)	**24**	24	25	24	24	20	20	20	20	25	20	19.5
Power (μW)	**340**	60	175	94	134	1120	103.4	730	63	68	300	43.5
Area (mm^2)	**0.8**	0.12	0.38	0.11	0.28	0.16	1.8	0.4	0.33	0.1	0.37	0.04
SNR (dB)	**96.4**	90.5	96.1	91.9	101	106	88.7	–	–	85.1	98.6	-
SNDR (dB)	**96.2**	89.6	94.6	91.2	99.4	103	86.4	80	76.1	84	97.7	88.5
DR (dB)	**98**	91	98.5	93	102.8	109	91	96	82	87.1	100.5	91.7
SFDR (dB)	**114**	100*	98*	104.8	110.2	123*	100*	–	78*	95	105.8	97.9
FoM_{SNDR}(dB)	**174.7**	175.6	176.2	175.3	181.9	175.5	169.3	154.4	161.1	169.7	175.9	175.0
FoM_{W} (pJ/lev)	**0.13**	0.05	0.079	0.066	0.034	0.24	0.15	2.23	0.3	0.105	0.12	0.051

$\text{FoM}_{\text{SNDR}} = \text{SNDR} + 10\log_{10}(\text{B.W/Power})$; FoM_W=Power / (2×B.W. $\times 2^{\text{ENOB}}$); ENOB=(SNDR-1.76)/6; *SFDR estimated from the PSD plot

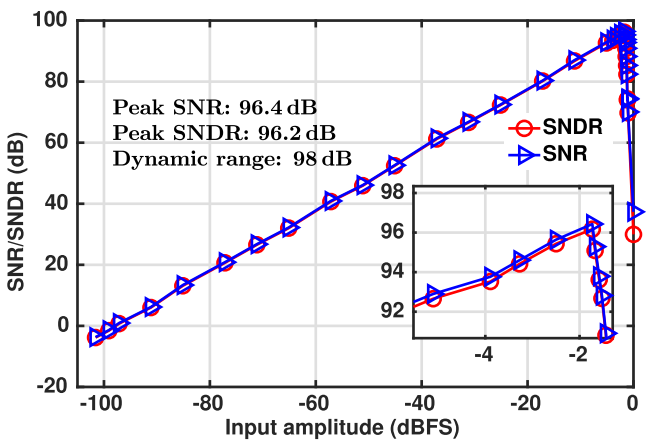

Fig. 17. Measured SNR/SNDR versus input amplitude.

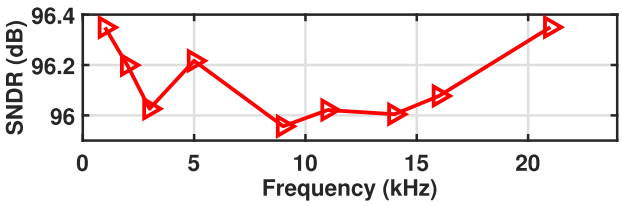

Fig. 18. Peak SNDR versus input frequency.

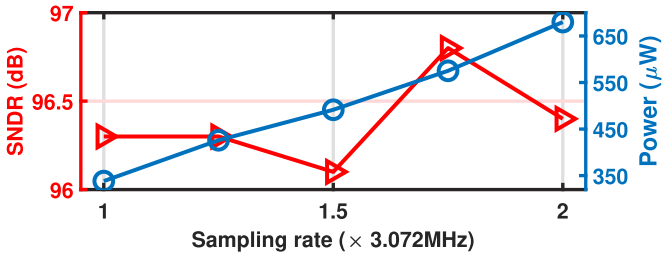

Fig. 19. Peak SNDR and the power consumption versus the sampling frequency.

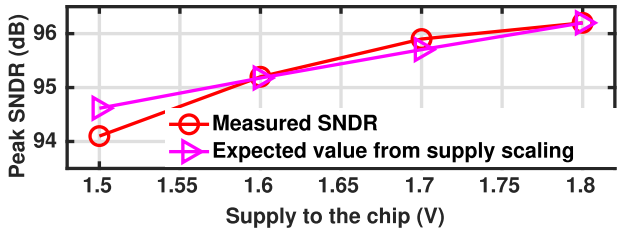

Fig. 20. Peak SNDR versus the chip supply.

sinusoid at −1.7 dBFS, where 0 dBFS corresponds to an input voltage of 3.6 V_{ppd}.

Fig. 17 shows the dynamic range plot when the modulator is excited by a 1-kHz sinusoid. The peak SNR measured is 96.4 dB, SNDR is 96.2 dB, and the DR is 98 dB. The measured SFDR at the MSA (see Fig. 16) is greater than 114 dB. Fig. 18 shows the variation of the peak SNDR versus the input frequency. The peak SNDR is greater than ∼96 dB throughout the bandwidth.

Fig. 19 shows the measured SNDR and the power as the sampling frequency is increased. The SNDR is greater than 96 dB till $f_s = 6.144$ MHz. Since there is no static power consumption in this system, the power also scales with the sampling frequency, as evident from the figure. Fig. 20 shows the SNDR variation as the overall supply to the chip is reduced (including the DAC reference). As the supply voltage is reduced, the MSA also reduces, and so does the peak SNDR. From Fig. 20, it is clear that the SNDR and the power scale with the supply voltage, till 1.5 V. These exemplify the frequency/voltage scalable nature of the implemented design.

Figs. 21 and 22 show the variation of the SNDR and SFDR versus temperature measured at a fixed amplitude of −2.3 dBFS. As the temperature is swept from 10 °C to 100 °C, the thermal noise is expected to increase by 1.2 dB

Authorized licensed use limited to: Zhejiang University. Downloaded on March 03,2026 at 01:50:16 UTC from IEEE Xplore. Restrictions apply.

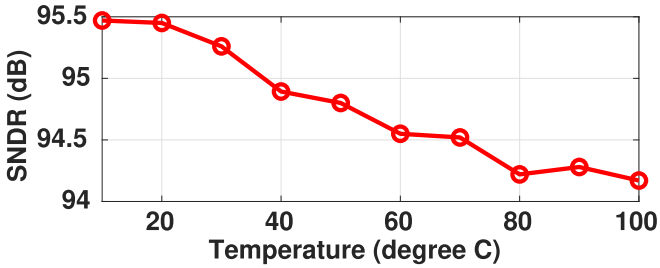

Fig. 21. Measured SNDR versus temperature at a fixed amplitude of −2.3 dBFS.

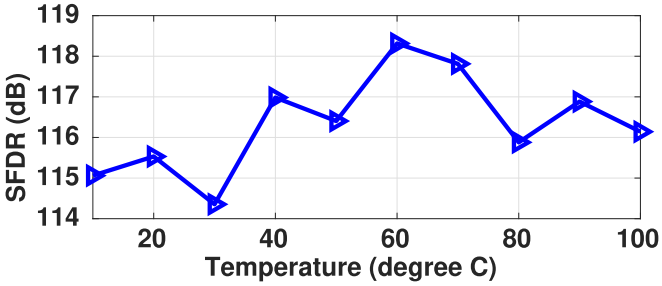

Fig. 22. Measured SFDR versus temperature at a fixed amplitude of −2.3 dBFS.

(following kT/C). The measured peak SNDR varies from 95.4 to 94.2 dB, and the variation in the SNDR is equal to the expected value of 1.2 dB. The SFDR remains greater than 114 dB over the entire temperature range proving the robustness of the ADC across temperatures.

Table II shows the performance of this work and compares it with DSMs having a similar bandwidth. Compared to the other DTDSMs, this work has a competitive Schreier FoM while achieving one of the highest SFDRs.

VII. Conclusion

This article presented and analyzed a new cascoded FIA. It was shown that, when a dynamic amplifier is used to realize closed-loop SC circuits, the settling speed depends on the average transconductance $G_{m,\text{avg}}$. For the floating inverter structure, it was shown that this $G_{m,\text{avg}}$ strongly depends on the reservoir capacitor value and weakly depends on the transistor dimensions. It is also less sensitive to the absolute temperature, unlike a static-current biased OTA. Using these results, a cascoded floating-inverter-based dynamic amplifier was designed and used to realize a third-order DTDSM. It achieves a peak SNDR of 96.2 dB and an SFDR of 114 dB in a 24-kHz bandwidth.

Acknowledgment

The authors would like to thank Shoubhik Karmakar for the technical discussions regarding testing and measurement.

References

[1] B. Verbruggen, J. Craninckx, M. Kuijk, P. Wambacq, and G. Van der Plas, "A 2.6mW 6 bit 2.2 GS/s fully dynamic pipeline ADC in 40 nm digital CMOS," *IEEE J. Solid-State Circuits*, vol. 45, no. 10, pp. 2080–2090, 2010.

[2] S.-H. W. Chiang, H. Sun, and B. Razavi, "A 10-bit 800 MHz 19 mW CMOS ADC," *IEEE J. Solid-State Circuits*, vol. 49, no. 4, pp. 935–949, Jan. 2014.

[3] J. Lin, M. Miyahara, and A. Matsuzawa, "A 15.5 dB, wide signal swing, dynamic amplifier using a common-mode voltage detection technique," in *Proc. IEEE Int. Symp. Circuits Syst. (ISCAS)*, May 2011, pp. 21–24.

[4] J. Lin, D. Paik, S. Lee, M. Miyahara, and A. Matsuzawa, "An ultra-low-voltage 160 Ms/s 7 bit interpolated pipeline ADC using dynamic amplifiers," *IEEE J. Solid-State Circuits*, vol. 50, no. 6, pp. 1399–1411, Jun. 2015.

[5] B. Zhang, R. Dou, L. Liu, and N. Wu, "A 91.2 dB SNDR 66.2 fJ/conv. dynamic amplifier based 24kHz $\Delta\Sigma$modulator," in *Proc. IEEE Asian Solid-State Circuits Conf. (A-SSCC)*, Nov. 2016, pp. 317–320.

[6] X. Tang *et al.*, "A 13.5b-ENOB second-order noise-shaping SAR with PVT-robust closed-loop dynamic amplifier," in *IEEE Int. Solid-State Circuits Conf. (ISSCC) Dig. Tech. Papers*, Feb. 2020, pp. 162–164.

[7] S. Pavan and R. S. Rajan, "Interreciprocity in linear periodically time-varying networks with sampled outputs," *IEEE Trans. Circuits Syst. II, Exp. Briefs*, vol. 61, no. 9, pp. 686–690, Sep. 2014.

[8] A. Matsuoka, T. Nezuka, and T. Iizuka, "Fully dynamic discrete-time $\Delta\Sigma$ADC using closed-loop two-stage cascoded floating inverter amplifiers," *IEEE Trans. Circuits Syst. II, Exp. Briefs*, vol. 69, no. 3, pp. 944–948, Mar. 2022.

[9] J. S. J. Silva, U. Moon, and G. C. Temes, "Wideband low-distortion delta-sigma ADC topology," *Electron. Lett.*, vol. 37, pp. 737–738, Jun. 2001.

[10] S. Pavan, R. Schreier, and G. Temes, *Understanding Delta-Sigma Data Converters* (IEEE Press Series on Microelectronic Systems). Hoboken, NJ, USA: Wiley, 2017, pp. 1–7.

[11] M. Eberlein, G. Panagopoulos, and H. Pretl, "A 40nW, sub-1V truly digital reverse bandgap reference using bulk-diodes in 16 nm FinFET," in *Proc. IEEE Asian Solid-State Circuits Conf. (A-SSCC)*, Nov. 2018, pp. 99–102.

[12] R. Schreier, J. Silva, J. Steensgaard, and G. C. Temes, "Design-oriented estimation of thermal noise in switched-capacitor circuits," *IEEE Trans. Circuits Syst. I, Reg. Papers*, vol. 52, no. 11, pp. 2358–2368, Nov. 2005.

[13] M. Kareppagoudr, J. Shakya, E. Caceres, Y.-W. Kuo, and G. C. Temes, "Slewing mitigation technique for switched capacitor circuits," *IEEE Trans. Circuits Syst. I, Reg. Papers*, vol. 67, no. 10, pp. 3251–3261, Oct. 2020.

[14] Y. Tsividis, *Operation and Modeling of the MOS Transistor* (Electrical Engineering Series). New York, NY, USA: McGraw-Hill, 1987.

[15] P. G. A. Jespers and B. Murmann, "Calculation of MOSFET distortion using the transconductance-to-current ratio (g_m/I_d)," in *Proc. IEEE Int. Symp. Circuits Syst. (ISCAS)*, May 2015, pp. 529–532.

[16] S. Ma, L. Liu, T. Fang, J. Liu, and N. Wu, "A discrete-time audio $\Delta\Sigma$ modulator using dynamic amplifier with speed enhancement and flicker noise reduction techniques," *IEEE J. Solid-State Circuits*, vol. 55, no. 2, pp. 333–343, Oct. 2020.

[17] S.-H. Liao and J.-T. Wu, "A 1V 175 μW 94.6 dB SNDR 25 kHz bandwidth delta-sigma modulator using segmented integration techniques," *IEEE J. Solid-State Circuits*, vol. 54, no. 9, pp. 2523–2531, Apr. 2019.

[18] M. Jang, C. Lee, and Y. Chae, "A 134-μW 99.4-dB SNDR audio continuous-time delta-sigma modulator with chopped Negative-R and tri-level FIR-DAC," *IEEE J. Solid-State Circuits*, vol. 56, no. 6, pp. 1761–1771, Jun. 2021.

[19] B. Gonen, F. Sebastiano, R. Quan, R. van Veldhoven, and K. A. A. Makinwa, "A dynamic zoom ADC with 109 dB DR for audio applications," *IEEE J. Solid-State Circuits*, vol. 52, no. 6, pp. 1542–1550, 2017.

[20] M. Honarparvar, J. M. de la Rosa, and M. Sawan, "A 0.9V 100 μW feedforward adder-less inverter-based mash $\Delta\Sigma$ modulator with 91 dB dynamic range and 20 kHz bandwidth," *IEEE Trans. Circuits Syst. I, Reg. Papers*, vol. 65, no. 11, pp. 3675–3687, 2018.

[21] M. Grassi, F. Conso, G. Rocca, P. Malcovati, and A. Baschirotto, "A multi-mode SC audio $\Sigma\Delta$ modulator for MEMS microphones with reconfigurable power consumption, noise-shaping order, and DR," in *Proc. ESSCIRC Conf., 42nd Eur. Solid-State Circuits Conf.*, Sep. 2016, pp. 245–248.

[22] Y. Yoon, D. Choi, and J. Roh, "A 0.4V 63 μW 76.1 dB SNDR 20 kHz bandwidth delta-sigma modulator using a hybrid switching integrator," *IEEE J. Solid-State Circuits*, vol. 50, no. 10, pp. 2342–2352, 2015.

[23] Y.-H. Hwang, J.-E. Park, and D.-K. Jeong, "A compact 87.1-dB DR bandwidth-scalable delta-sigma modulator based on dynamic gain-bandwidth-boosting inverter for audio applications," in *Proc. IEEE Asian Solid-State Circuits Conf. (A-SSCC)*, Nov. 2017, pp. 293–296.

Authorized licensed use limited to: Zhejiang University. Downloaded on March 03,2026 at 01:50:16 UTC from IEEE Xplore. Restrictions apply.

[24] S. Lee, W. Jo, S. Song, and Y. Chae, "A 300 μW audio $\Delta\Sigma$ modulator with 100.5 dB DR using dynamic bias inverter," *IEEE Trans. Circuits Syst. I, Reg. Papers*, vol. 63, no. 11, pp. 1866–1875, 2016.

[25] J. Steensgaard, "Bootstrapped low-voltage analog switches," in *Proc. IEEE Int. Symp. Circuits Syst. (ISCAS)*, vol. 2, May 1999, pp. 29–32.

[26] T. Kobayashi, K. Nogami, T. Shirotori, Y. Fujimoto, and O. Watanabe, "A current-mode latch sense amplifier and a static power saving input buffer for low-power architecture," in *Symp. VLSI Circuits Dig. Tech. Papers*, 1992, pp. 28–29.

[27] K.-D. Chen and T.-H. Kuo, "An improved technique for reducing baseband tones in sigma-delta modulators employing data weighted averaging algorithm without adding dither," *IEEE Trans. Circuits Syst. II, Analog Digit. Signal Process.*, vol. 46, no. 1, pp. 63–68, Jan. 1999.

R. S. Ashwin Kumar (Member, IEEE) received the B.E. degree from the College of Engineering, Guindy (CEG), Anna University, Chennai, India, in 2013, and the Ph.D. degree from IIT Madras, Chennai, India, in 2020.

He is currently an Assistant Professor with IIT Kanpur, Kanpur, India. His research interests are in analog mixed-signal design and signal processing.

Nagendra Krishnapura (Senior Member, IEEE) received the B.Tech. degree from IIT Madras, Chennai, India, in 1996, and the Ph.D. degree from Columbia University, New York, NY, USA, in 2000.

He was an Analog Design Engineer with Celight Inc., Iselin, NJ, USA, Multilink, Somerset, NJ, USA, and Vitesse Semiconductor, Somerset. He has taught analog circuit design courses at Columbia University as an Adjunct Faculty. He is currently a Professor with IIT Madras. His interests are analog and RF circuit design, and analog signal processing.

Paramita Banerjee received the B.E. degree from Jadavpur University, Kolkata, India, in 2017. She is currently pursuing the M.Sc. degree with IIT Madras, Chennai, India.

Her research interests are in the area of data converters.

Authorized licensed use limited to: Zhejiang University. Downloaded on March 03,2026 at 01:50:16 UTC from IEEE Xplore. Restrictions apply.