Ping-Pong Operated Inverter-based OTA using Correlated Level Shifting Technique

Tianqiao Wu[1], Zhichao Tan[2], Ning Xie[3]*, Hao Zhang[4], and Le Ye[4]

[1]School of Electronics and Information Engineering, Anhui University, Hefei, 230601, China
[2] College of Information Science & Electronic Engineering, Zhejiang University, Hangzhou, 310058, China
[3] Shanghai Institute of Technology Physics, Chinese Academy of Sciences, Shanghai, 200083, China
[4]Information Technology Institute, Peking University, Tianjin Binhai, 300450, China
*Email:n.xie@mail.sitp.ac.cn

Abstract

This paper presents an inverter-based operational transconductance amplifier (OTA) which obtains high loop gain by correlated level shifting (CLS) technique with ping-pong operation. Thanks to the shifting capacitor providing voltage step between the OTA output and the inverter output, the suppressed inverter output swing helps OTA to achieve higher DC gain yielding better accuracy in the application of charge amplifier or integrator. The proposed technique utilizes two identical sub-OTA structures working in the ping-pong way to provide level shifting reference voltage for each other. This operation allows inverter-based OTA to work at the amplification mode in both clock phases, thus double sampling technique can be adopted to achieve twice of the charge transfer efficiency. Compared with the conventional inverter-based charge amplifier, the proposed topology improves DC gain from 39dB to 71dB at the cost of 17% power consumption increase from 7.1μA to 8.6μA.

1. Introduction

Rapid progress in the field of integrated circuit design has been advantageous in cost and miniaturization. Although technology scaling is advantageous to digital circuits in terms of high speed and low power, analog circuits strongly suffer from this trend, due to the reduced output impedance and supply voltage. More specifically, the realization of some high-performance analog circuits becomes more tough, such as OTA. Many efforts have been made to solve this problem. In [1], an inverter-based SC circuit technique is proposed and had exploited the possibility of substituting OTAs with inverters. [2] shows that correlated level shifting (CLS) is an effective method to reduce errors due to finite opamp gain and output swing, which are exactly the major drawbacks of the inverter-based OTA. Combining a inverter-based OTA and the CLS technology has been proven to be beneficial [5]. However, the need of an extra biasing circuitry makes the design complex and power costing.

This work proposes a novel inverter-based OTA topology, using two identical inverters to execute ping-pong operation. Consequently, the integrated capacitor of inverter-based OTA can be charged throughout the cycle Compared with the conventional inverter-based charge amplifier, DC gain is almost doubled with the increased output swing, whereas the power consumption is almost the same.

This paper is organized as followed. Section 2 gives an overview of the techniques and shortages of the classical structure of inverter-based OTA with CLS technique. Section 3 shows the proposed topology of ping-pong operated inverter-based OTA with CLS and explains how it achieves a higher DC gain. The improvements are presented in the simulation results in Section 4. At the end of the paper, conclusions are given in Section 5.

2. Conventional Inverter-based OTA with CLS

The following three parts clarify the techniques and disadvantages of the conventional inverter-based OTA using CLS technique briefly:

2.1 Inverter-based OTA

Inverter-based OTA is currently a popular topology who finds its application in both charge amplifiers and integrators. The working process requires two phase

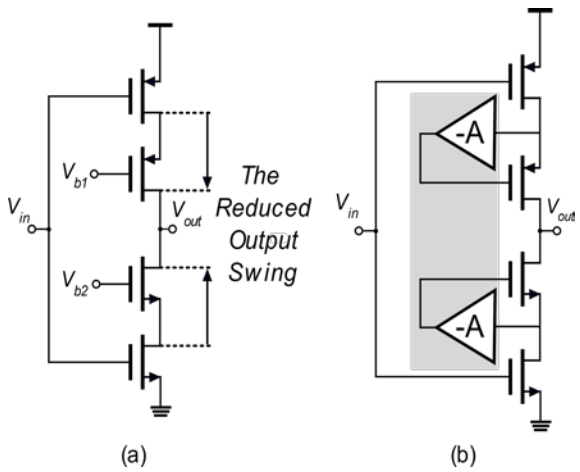

Fig. 1 *(a) Traditional cascode inverter and (b) gain-boost inverter*

978-1-7281-6235-5/20/$31.00 ©2020 IEEE
Authorized licensed use limited to: Zhejiang University. Downloaded on March 02,2026 at 03:06:58 UTC from IEEE Xplore. Restrictions apply.

clocks: sampling and transfer phase, the offset voltage of the inverter can be sampled at first, then charge transfer occurs. Since both input devices contribute transconductance with class AB biasing, it can be fast and power efficient [1]. However, inverter-based OTA usually suffers from low DC gain which heavily limits its application. Techniques such as cascoding and gain-boosting have been introduced to help improving the DC gain of the inverter-based OTA for low power Delta-Sigma ADC and sensor interface applications recently [2, 3]. Two approaches are shown in Fig. 1. Although the DC gain is increased, the output swing is reduced at the same time. Moreover, such techniques usually require extra biasing circuitry to put cascoding or gain boosting devices in the proper working region which degrades the overall energy efficiency of such tolology

2.2 Correlated level shifting

Correlated level shifting (CLS) is proposed to improve DC gain of the OTA with different thinking: the DC gain is improved by suppressing swing at output of OTA, which makes virtual ground node moving closer to signal ground node yielding better charge accuracy and thus higher DC gain [4]. This technique simultaneously decreases the error due to finite opamp gain and allows operation to and beyond the rails (true rail-to-rail operation) [5]. As shown in Fig. 2(a), during φ_1 phase, input voltage is sampled at the sampling capacitor C_s, and the feedback C_f capacitor is reset in case of charge amplifier; and when the φ_2 phase comes, during the φ_{21} phase referred as 'coarse charging phase' in Fig. 2(b),

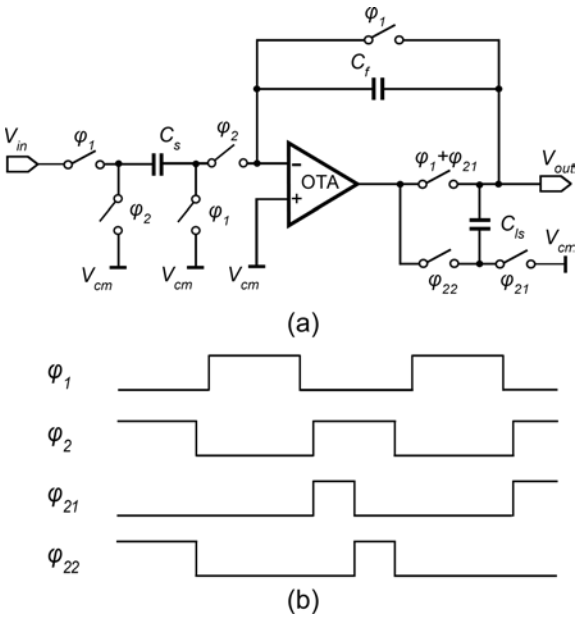

Fig. 2 *Ideal illustration of correlated level shifting technique [5], (a) diagram (b) timing*

OTA charges both the feedback capacitor C_f and the level shifting capacitor C_{ls} ; during the final shifting phase φ_{22} referred as 'fine charging phase', C_{ls} is inserted between V_{out} and V_o (The output of the inverter) acting as shifting battery. The suppressed output swing at V_o requires less overdrive voltage at input of OTA thus yield much more accurate charge transfer. The DC gain can be approximately doubled in dB by the level shifting action. It is also reported in [5] that the transient performance of a 30dB DC gain opamp with CLS behaves almost the same as a 60dB cascode opamp, or even faster if designed properly.

In contrast to conventional correlated double sampling (CDS) scheme, who samples and cancels gain error at the input of an OTA, all sampling imperfections of CLS technique are attenuated. On the other hand, CLS cannot cancel the low-frequency imperfection of an OTA [6]. Another drawback of CLS is a glitch may occur at the output at the transition instant between coarse and fine charging phase. To deal with this problem, split-CLS is proposed in [7]. Split-CLS technique utilizes two separated amplifiers in two charging phases: AMP1 for coarse charging and AMP2 for fine charging. While AMP1 focuses on large output swing and high slewing capability, AMP2 focuses on large DC gain. This topology leads to an optimum OTA performance. Meanwhile, at the beginning of fine charging phase, the output of AMP2 is V_{cmo}, which is the final settle voltage, so no glitch appears.

Several other techniques were proposed to improve the performance of CLS. In [8], averaging CLS (ACLS) is proposed. It halves the sampling capacitance under the same SNR requirement, which lowers the power consumption and cost of the ADC. In [9], Weighted-Averaging CLS (WACLS) is proposed to overcome the speed-degradation drawback of conventional CLS-based residue amplification.

2.3 Inverter-based OTA with CLS

Correlated level shifting technique can be used in inverter-based OTA to help improving the DC gain, as proposed in Fig. 3. The operation is similar as shown in the previous section. During φ_1 phase, inverter is auto-zeroed and C_s samples input voltage; when φ_{21} phase comes, top plate of C_{ls} is connected to the inverter output while the bottom plate is connected to a voltage equal to the inverter's critical point, inverter charges C_{ls} to make the coarse estimation of output; then during φ_{22} phase the level shift capacitor C_{ls} is inserted and with suppressed output swing at the inverter output, shifting its voltage towards V_{CM}. Therefore, the charge redistribution reduces the amount of residue charge on C_s and results in a complete charge transfer, thus the effective DC gain is improved.

However, the key drawback in the idea shown in

978-1-7281-6235-5/20/$31.00 ©2020 IEEE
Authorized licensed use limited to: Zhejiang University. Downloaded on March 02,2026 at 03:06:58 UTC from IEEE Xplore. Restrictions apply.

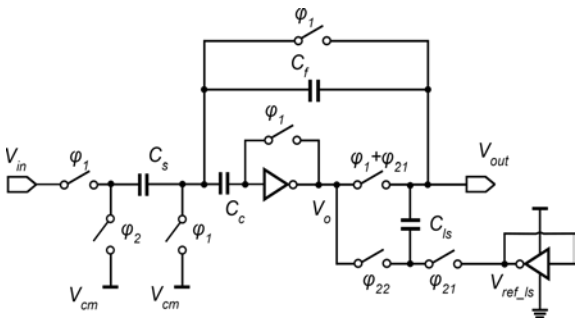

Fig. 3 *Inverter-based OTA using correlated level shifting technique*

Fig. 3 is the need of an extra biasing inverter to provide reference voltage during coarse charging phase. This reference is important since its output is the idle voltage of the inverter-based OTA when there is no input presented. If the output voltage V_o goes back to V_{ref} during level shifting phase, the virtual ground node V_G will go back to V_{CM} which means infinite DC gain of inverter. Due to the capacitor charge sharing and limited accuracy of output voltage estimation during coarse charging phase, the DC gain is improved from 37.5dB to 69.3dB in the simulation.

3. Proposed topology

The ping-pong operated double sampled inverter-based OTA with double sampling is proposed to solve the problem mentioned above completely with the same charge transfer gain and no extra reference voltage building block is required as shown in Fig. 4(a). The inverter-based OTA and the input sampling networks are broken into two identical pieces and each sub-OTA takes half of the original current. During operation, at φ_0 phase, both C_f and C_{ls} are reset. As shown in Fig. 4(b), When φ_{11} phase comes, inverter-1 works in coarse charging phase, transferring the charge onto C_{s1} (which is stored during previously φ_{22} phase); As shown in Fig4(c), while inverter-2 is auto-zeroed and serve as a V_{ref_ls} provider. And Since C_{s1} is half of C_f, we'll get a voltage drop of approximately V_{in} /2 on C_f. During φ_{12} phase, C_{ls} is inserted between V_{out} and V_o of inverter-1, which suppresses the output swing. Thus, it yields an accurate charge transfer of $Q/2$($Q=V_{in}\times C_s$, $C_f=C_s$) on C_f. When it comes to φ_{21} and φ_{22} phases, inverter-2 works as an integrator while inverter-1 is auto-zeroed. Similar to φ_{11} and φ_{12} phases, they transfer another $Q/2$ charge to C_f, and a voltage drop of approximately V_{in} on C_{ls}. Meanwhile, C_{ls} is connected between V_{out} and V_o of inverter-2 in φ_{22} phases, suppressing the output swing of inverter-2 to nearly zero, consequently increases the DC gain dramatically.

4. Simulations

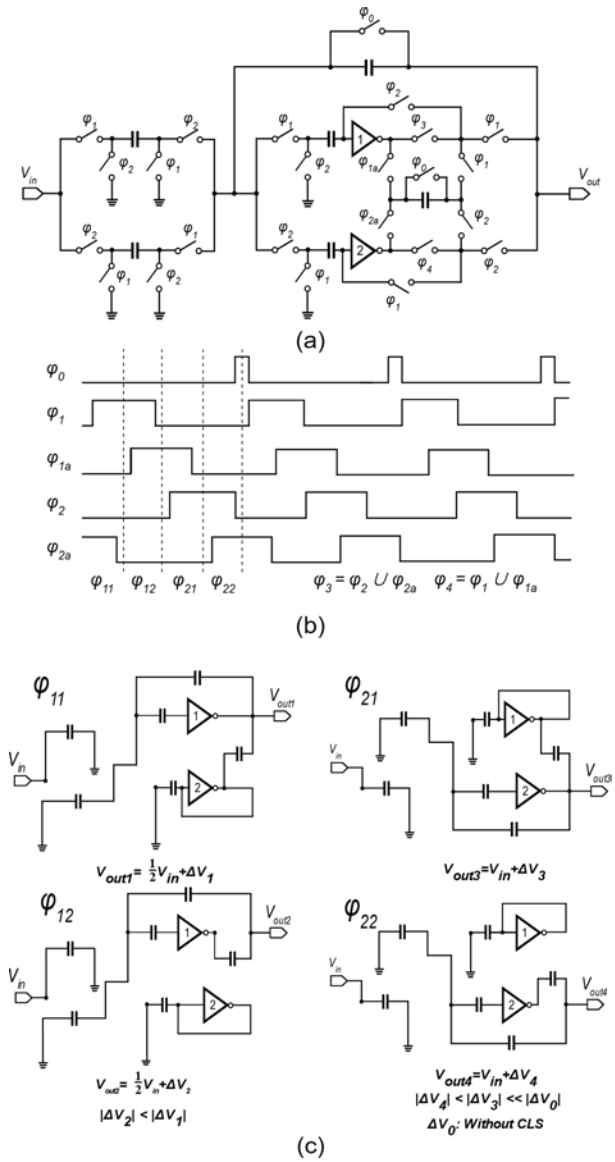

Fig. 4 *Proposed ping-pong operated inverter-based charge amplifier*

The proposed Ping-Pong Operated Inverter-based OTA using Correlated Level Shifting Technique is designed and simulated in 180nm CMOS process. Fig. 5 shows the simulated DC gains of conventional and proposed inverter-based Ping-Pong Operated Inverter-based OTA across different output swing magnitudes. Proposed technique boosts the integrator's DC gain by 21.8 dB within the entire rail-to-rail output range, and 31dB within 80% of the entire range. When configured in capacitive feedback, the charge amplifier based on Ping-Pong Operated Inverter-based OTA has a linear output range of 80% full scale compared to 55% by the conventional one with much lower gain error, as shown in Fig. 6. The performance improvement above is

978-1-7281-6235-5/20/$31.00 ©2020 IEEE
Authorized licensed use limited to: Zhejiang University. Downloaded on March 02,2026 at 03:06:58 UTC from IEEE Xplore. Restrictions apply.

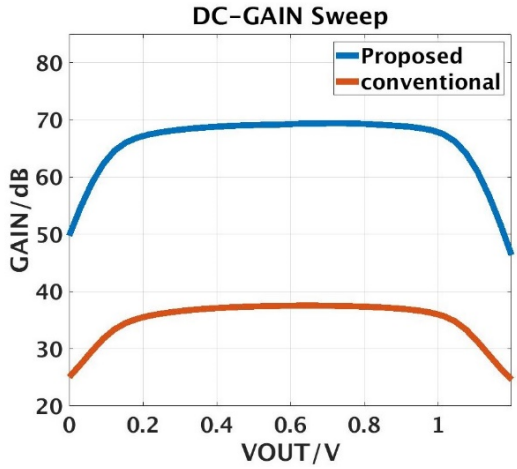

Fig. 5 *DC gain comparison between conventional and proposed charge amplifier*

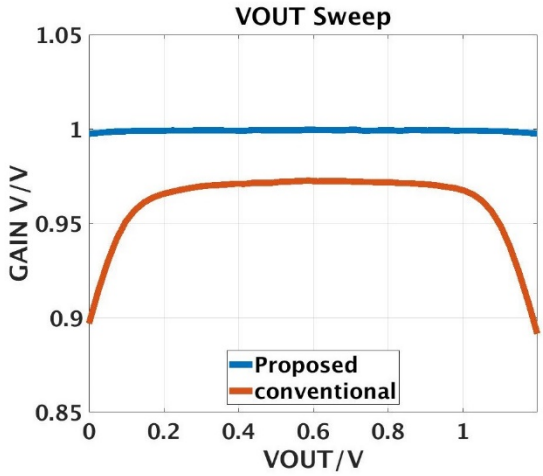

Fig. 6 *Input Sweep and linearity comparison between conventional and proposed charge amplifier*

achieved at the cost of only 17% increase in current consumption from 7.7μA to 9μA at clock frequency of 100kHz.

5. Conclusion

We present an amplifier topology referred as Ping-pong operated inverter-based OTA. Level shifting technique helps to improve the DC gain of inverter-OTA from 37.5dB to 69.3dB. Ping-pong operation allows each sub-OTA providing reference voltage during coarse charging phase for each other. This topology eliminates the needs for a power-hungry reference generator compared with the conventional inverter-based OTA with CLS. Double sampling technique is also used to further improve the charge transfer efficiency. Compared with conventional inverter-based OTA, the proposed topology provides much higher DC gain with similar current and area consumption. The proposed topology can be used as either charge amplifier or integrator in high precision low power ADC designs.

Acknowledgments

The author thanks their tutors and colleagues from Zhejiang University and Peking University for valuable technical discussions and suggestions.

References

[1] Chae, Y., and Han, G.: 'Low voltage, low power, inverter-based switched-capacitor delta-sigma modulator', *Journal of Solid-State Circuits*, 44, (2), pp.458-472(2009)

[2] Tan, Z., Daamen, R., Humbert, A., et al.: 'A 1.2-V 8.3-nJ CMOS humidity sensor for RFID applications', *Journal of Solid-State Circuits*, 48, (10), pp.2469-2477(2013)

[3] Luo, H., Han, Y., et al.: 'A 0.8-V 230-µ W 98-dB DR Inverter-Based Sigma-Delta Modulator for Audio Applications', *Journal of Solid-State Circuits*, 48, (10), pp.2430-2441(2013)

[4] Gregoire, B.R., and Moon, U.K.: 'An over-60dB true rail-to-rail performance using correlated level shifting and an opamp with only 30dB loop gain', *Journal of Solid-State Circuits*, 43, (12), pp.2620-2630(2008)

[5] Zhang, H., Tan, Z. and Nguyen, K.: 'Inverter-based low power delta-sigma modulator using correlated level shifting technique', *Electronics Letters*, 54, (25), pp.1663-1665(2017)

[6] T. He and G. C. Temes, 'System-level noise filtering and linearization,' *Custom Integrated Circuits Conference*, pp. 1-8(2018)

[7] B. Hershberg, S. Weaver and U. Moon, 'Design of a Split-CLS Pipelined ADC With Full Signal Swing Using an Accurate But Fractional Signal Swing Opamp,' *Journal of Solid-State Circuits*, 45, (12), pp.2623-2633(2010)

[8] T. Hung and T. Kuo, 'A 4.86 mW 15-bit 22.5 MS/s pipelined ADC with 74 dB SNDR in 90 nm CMOS using averaging correlated level shifting technique,' *Asian Solid-State Circuits Conference*, pp.161-164(2016)

[9] T. Hung, J. Wang and T. Kuo, '16.4 A Calibration-Free 71.7dB SNDR 100MS/s 0.7mW Weighted-Averaging Correlated Level Shifting Pipelined SAR ADC with Speed-Enhancement Scheme,' *International Solid- State Circuits Conference*, pp.256-258(2020)

978-1-7281-6235-5/20/$31.00 ©2020 IEEE
Authorized licensed use limited to: Zhejiang University. Downloaded on March 02,2026 at 03:06:58 UTC from IEEE Xplore. Restrictions apply.