2022 IEEE International Conference of Electron Devices Society Kolkata Chapter (EDKCON) | 978-1-6654-7205-0/22/$31.00 ©2022 IEEE | DOI: 10.1109/EDKCON56221.2022.10032969

An Ultra-Low Power (86 nW) Low-Voltage (0.6 V) Self-Biased Instrumentation Amplifier for Bio-Medical Applications

Koyel Mukherjee
Inst. of Radio Physics and Electronics
University of Calcutta
Kolkata, India
koyel.666@gmail.com

Soumya Pandit
Inst. of Radio Physics and Electronics
University of Calcutta
Kolkata, India
sprpe@caluniv.ac.in

Rajat Kumar Pal
Dept. of Computer Science and Engineering
University of Calcutta
Kolkata, India
pal.rajatk@gmail.com

***Abstract*—In this article, an operational transconductance amplifier (OTA)-based self-biased, ultra-low power instrumentation amplifier is proposed. The design is performed in SCL 0.18 μm technology under 0.6 V power supply. The total current drawn from the supply is 144 nA, resulting in ultra-low power consumption of 86 nW. The entire circuit is self-biased by an in-built current reference circuit. The instrumentation amplifier produces a fixed gain of 61 dB with unity gain bandwidth of 4.1 KHz and input RMS noise voltage of 2.01 μV_{rms}. The amplifier is aimed for bio-medical applications and is capable of amplifying a signal as low as 0.5 μV with an ultra-low frequency of 1 Hz also, serving the range of even the weakest possible bio-potential signal quite efficiently.**

***Index Terms*—Low power, self-biased, low-voltage, instrumentation amplifier, weak inversion, low-bias current.**

I. Introduction

Transducer-generated electrical-equivalent signals of various physical quantities (like pressure, temperature, humidity, etc.) are generally very weak (low) in amplitude and frequency. An instrumentation amplifier (IA) is a special type of amplifier that is aimed to amplify such low-level signals with high accuracy. Bio-medical domain deals with instruments that need to sense and record such low-level signals generated from the human body. Thus, an IA finds a wide application in bio-medical fields where various bio-potential signals (ECG, EEG, EMG, etc.) have signal strength ranging from as low as 1 μV to a maximum of 10 mV, with a frequency range from a few hundred of mHz to maximum of 10 KHz only [1], as shown in Fig. 1 [2].

A. Motivation and Literature Survey

Ever increasing demand of implantable bio-medical instruments, like pacemakers, ear-aid, glucometers, etc. are in the recent trend for the last several years. Due to the unavailability of frequent power-charging, implantable medical devices need to consume minimum power. As both supply voltage and bias current of a circuit play a direct role in the required power consumption, hence, the reduction of one/both of the factors help in achieving minimum power requirement. This motivates the design of an IA circuit that can run in low voltage and is biased by low to ultra-low bias current to achieve the required ultra-low power consumption criteria.

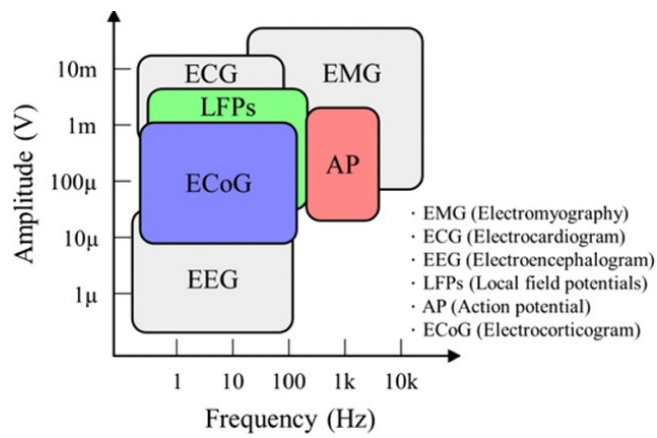

Fig. 1. Various bio-medical signals showing their signal amplitude and frequency range [2].

For the last several years, researchers have been working on low power electronics. Various architectures for instrumentation amplifiers have been proposed to meet the requirement of low power consumption. In [3], a current mode instrumentation amplifier had been proposed which obtaind an excellent noise efficiency factor of only 1.88 with a fixed signal gain of 40.04 dB. The amplifier operated under 1.8 V supply voltage and drew a total current of 43.8 μA, resulting in power consumption of 78.84 μW. A transresistance-based resistor-less IA was implemented with very few numbers of transistors in [4] that operated under $\pm$ 0.9 V supply voltage and consumed a total 492-494 μW, which was quite high for low power applications. Article [5] proposed a current mode instrumentation amplifier with a gain and bandwidth programmable in the range of 30 dB to 40 dB and 100 Hz to 2.7 KHz, respectively. The work featured an extremely low

Soumya Pandit is the corresponding author and principal supervisor of the work, Email id: sprpe@caluniv.ac.in

978-1-6654-7205-0/22/$31.00 ©2022 IEEE

Authorized licensed use limited to: Zhejiang University. Downloaded on December 19,2025 at 06:52:42 UTC from IEEE Xplore. Restrictions apply.

input referred noise (1.34 μV_{rms}) at an expense of quite a high supply current of 18.3 μA drawn from 1.8 V supply voltage, contributing to a power consumption of 32.94 μW. Article [6] had proposed a current mode instrumentation amplifier with a variable gain of 20-40 dB by externally tuning a current source. It offered a variable ultra-low power consumption of 72 nW to 386 nW depending upon gain level. The circuit suffered from a major drawback that the circuit operation is entirely current based, and hence it requires an additional voltage to current converter at the input terminal if the input signal is voltage; thus, the overall power consumption is sure to increase further. A capacitively coupled chopper instrumentation amplifier with chopping ripple reduction technique was designed in [7], which offered a very low noise efficiency factor of 1.3 and input referred noise of only 13 nV/$\sqrt{Hz}$ consuming power of 4.5 μW from 0.5 V-1.8 V supply voltage with fixed gain of 60 dB and very low bandwidth of 300 Hz only. Article [8] has obtained a very high CMRR (130 dB) by incorporating a front-end amplifier with a very high common mode impedance. The circuit operated in a 1.8 V supply and drew a supply current of 1.86 μA with a power consumption of 3.3 μW. An area-efficient ripple rejection technique was implemented in an instrumentation amplifier reported in [9]. A fixed gain of 40 dB with 700 Hz of bandwidth was obtained under 1 V supply voltage, drawing a quite high of 1.8 μA current from the supply. Article [10] has described a cascadable current mode instrumentation amplifier that operates in $\pm$1.25 V to produce a gain of a maximum 72 dB at the cost of very high biasing current of as high as 100 μA. Such a high supply voltage and biasing current results into a significantly high power consumption of 0.5 mW. A very high differential gain of 91 dB was obtained in a resistor-free current mode IA, as described in [11], that operated at a low supply voltage of $\pm$0.8 V but consumed quite a high power of 0.446 mW, which is large enough of a value for low-power applications.

B. Contribution of the Proposed Work

In this article, a two-stage operational transconductance amplifier (OTA)-based IA is designed in standard CMOS 0.18 μm technology, that operates under a very low supply voltage of 0.6 V and is biased by an in-built 1 nA current reference circuit [12]. All the voltage biasing and current biasing are internally produced, making it a completely self-biased circuit. The proposed circuit draws a total supply current of 144 nA, resulting in an ultra-low power consumption of 86.4 nW only. The work is aimed for low voltage low power applications, such as bio-medical instruments. Therefore, the entire design is performed in Weak Inversion (WI) mode of MOS transistors.

C. Organization of the Work

The rest of the part is organized as follows. Section II discusses the design proposal and implementation of the work. Simulation results and a comparative study with reported works are presented in Section III. Section IV concludes the work.

II. Design Proposal and Implementation

1) Proposed Topology: Fig. 2 shows the topology of our proposed OTA-based instrumentation amplifier with its transistor sizes. The outputs of a sensor (or transducer) are applied to the input transistor pair, M_1 and M_2, through a buffer stage comprising of transistor pairs M_{13}, M_{15} and M_{14}, M_{16}, respectively. The input terminals are V_{in1} and V_{in2}. Transistors M_3 and M_4 act as the load to the input transistors and are biased by internal bias voltage V_{bias}, generated by the current reference circuit [12]. Transistors M_5-M_8 build an additional gain stage. Transistors M_7, M_8, and M_9 draw the required bias currents from the current reference circuit through a current mirror formed by M_{10}-M_{12}. Two 400 fF capacitors, C_c, connected between the output terminals of the first and second gain stages, help to achieve stable frequency response by Miller effect. V_{od} is the differential output of the amplifier. The current reference circuit is discussed in [12] and is shown in Fig. 3.

2) Implementation: To ensure low power operation, all the transistors are biased in the weak inversion (WI) saturation region. The current expression in the WI region is given as

$$I_d = I_o \left(\frac{W}{L}\right) \exp\left(\frac{V_{GS} - V_T}{\eta U_T}\right) \left(1 - \exp\left(-\frac{V_{DS}}{U_T}\right)\right) \tag{1}$$

Here, V_{GS}, V_{DS}, V_T, and U_T are the gate to source voltage, drain to source voltage, threshold voltage, and thermal voltage, respectively. I_o is the technology current and given as

$$I_o = 2\mu C_{ox} (\eta - 1) U_T^2 \tag{2}$$

Here, μ, C_{ox}, and η are mobility, oxide capacitance per unit area, and subthreshold slope factor of the transistor, respectively. By applying a 0.3 V ($-$0.3 V) to a shorted gate-drain terminals w.r.t. source of an NMOS (a PMOS) transistor with unity aspect ratio, I_o is obtained to be 400 nA (165 nA).

From (1), we find that for a transistor operating in WI region, the drain current saturates for the case $V_{DS} \geq 4U_T$. U_T being 26 mV, the minimum V_{DS} for any transistor to operate in WI saturation region, therefore, needs to be as minimum as 0.1 V. As observed from Fig. 2, in any of the paths between the supply rails, a maximum of three transistors are in the stack. Therefore, for all the transistors in stack, between the supply rail, to be in saturation, the required minimum supply voltage is 0.3 V. However, the current reference circuit, shown in Fig. 3, gives the best of its performance for a V_{DD} as minimum as 0.5 V. Hence, the supply voltage for the proposed IA circuit is chosen to be 0.6 V. Total power consumption of a circuit is directly proportional to its supply voltage, V_{DD}, and bias current [13]. Therefore, the choice of lower supply voltage along with lower bias current will essentially result in lower power consumption. The bias current, I_{bias} = 1 nA, generated from the internal current reference circuit in Fig. 3, biases the first gain stage. The second gain stage is biased

Authorized licensed use limited to: Zhejiang University. Downloaded on December 19,2025 at 06:52:42 UTC from IEEE Xplore. Restrictions apply.

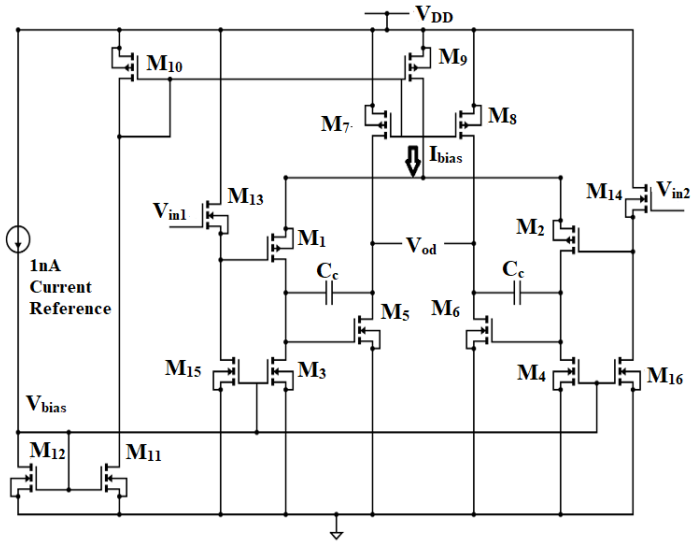

Transistors	(W/L) (µm)
M_1-M_2	0.3/3.0
M_3-M_4	0.505/5.7
M_5-M_6	0.53/4
M_7-M_8	1.4/0.3
M_9	0.6/2.0
M_{10}	0.22/1.0
M_{11}-M_{12}	0.4/2.0
M_{13}-M_{14}	10.0/0.2
M_{15}-M_{16}	0.22/10

Fig. 2. The proposed OTA-based instrumentation amplifier with its transistor sizes.

by a 15 nA bias current generated through the same reference circuit.

Since, low bias current contributes to low power consumption, therefore, all transistors are biased in the WI region. Gate terminals of the transistors are all biased at a voltage below their corresponding V_T at least by 72 mV [13], and also not as small to shift them in cutoff region. Therefore, the input common mode range (ICMR) should be between $\approx$ 180 mV to $\approx$ 320 mV, for V_T being 0.4 V and -0.38 V for NMOS and PMOS transistors, respectively.

The conventional square-law model of the transistor is no longer valid near or below threshold region. Therefore, Inversion Coefficient (IC) methodology [13] has been implemented to graphically determine all transistor sizes.

Inversion Coefficient (IC) defines the level of channel inversion of a transistor and expressed as,

$$IC = \frac{I_d}{I_o(\frac{W}{L})} \tag{3}$$

In the deep WI region (i.e., for IC<0.01), transconductance efficiency, g_m/I_d, approaches a constant value and expressed as

$$g_m/I_d = 1/\eta U_T \tag{4}$$

For IC $\approx$ 0.001, g_m/I_d for NMOS and PMOS are $\approx$ 33.3 and $\approx$ 25, respectively, as shown in Fig. 4 and Fig. 5. Therefore, choosing IC $\approx$ 0.001 and putting this value in (3), the aspect ratios of all the transistors are obtained. The sizes of all device components are shown in Fig. 2.

III. Simulation Result and Discussion

The proposed circuit is designed in SCL 0.18 μm process technology using Cadence Virtuoso design editor tool. All the simulations are performed in Cadence Spectre simulator under 0.6 V supply voltage.

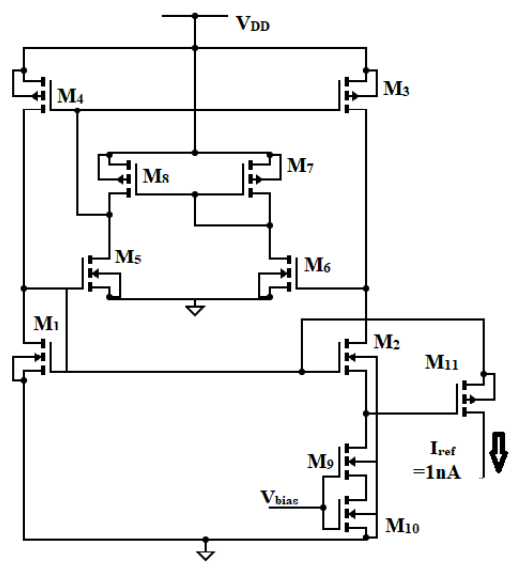

Fig. 3. In-built current reference circuit [12].

To observe the input common mode range, a DC sweep is performed on the common mode voltage, V_{cm}, and the response of the differential output voltage, V_{od}, is observed in Fig. 6. Also, the DC response of the bias current, I_{bias}, is monitored w.r.t. the variation of V_{cm}. The range of V_{cm}, for which I_{bias} is constant, determines the range of input common mode signal.

A differential input signal of 1 μV magnitude is applied on a common mode voltage of 0.245 V to perform an AC analysis. The AC response of the circuit, in Fig. 7, shows a differential gain of 61 dB with 4 Hz cutoff frequency. The unity gain bandwidth is 4.1 KHz. The amplifier demonstrates a phase margin of $84°$. The gain margin of 27 dB is obtained

Authorized licensed use limited to: Zhejiang University. Downloaded on December 19,2025 at 06:52:42 UTC from IEEE Xplore. Restrictions apply.

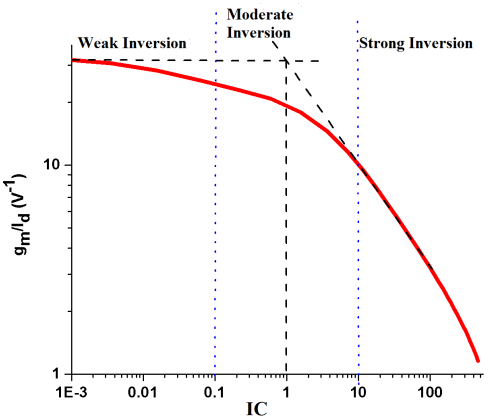

Fig. 4. g_m/I_d vs. IC plot of NMOS.

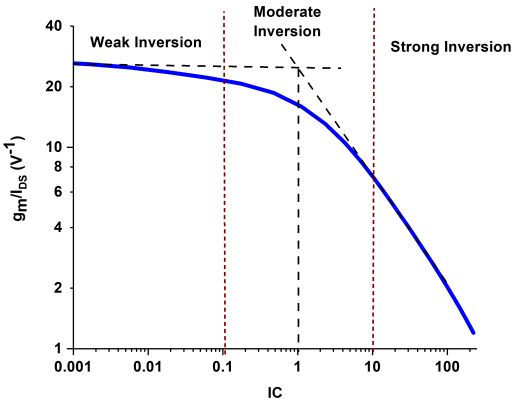

Fig. 5. g_m/I_d vs. IC plot of PMOS.

at 100 KHz phase crossover frequency.

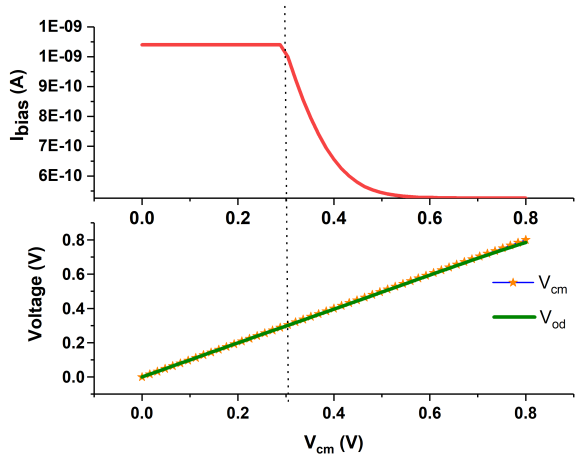

Fig. 6. Plot showing input common mode range.

A transient analysis is performed on a differential input signal, V_{id}, of amplitude 500 nV with 1 Hz frequency, upon an input common mode voltage of 245 mV. V_{id} being negligibly small w.r.t. the common mode level, cannot be shown in the same amplitude scale in Fig. 8. We observe that the amplitude of the differential output voltage, V_{od}, is $\approx$ 600 μV, as a result

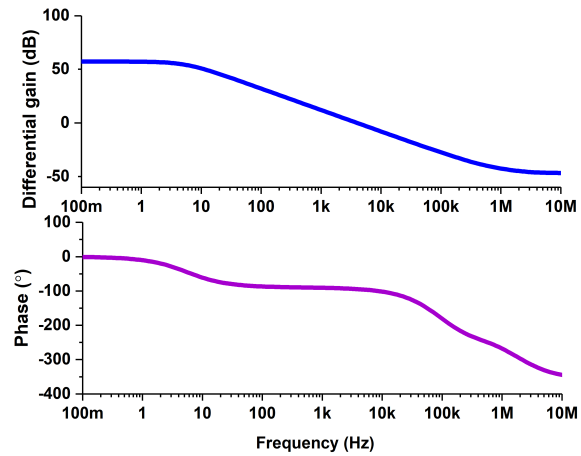

Fig. 7. AC response of the proposed circuit showing the differential gain and bandwidth.

of the differential gain of 61 dB.

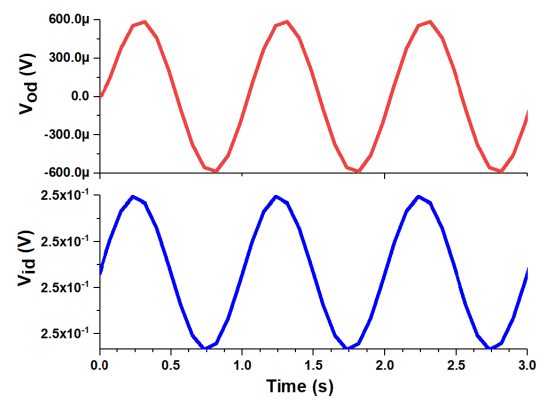

Fig. 8. Transient analysis showing amplification of a differential signal as low as 0.5 μV.

Since, bio-medical signals are very weak in amplitude (1 μV to $\approx$1 mV), therefore, these signals are highly prone to noise. The combined effect of various noise sources referred to the input of the circuit is likely to get amplified by the circuit's noise gain and makes it difficult to identify the bio-potential signals at the output of the amplifier. Therefore, input referred noise, as low as possible, is always desirable. Hence, a noise analysis is performed on the proposed circuit, as seen in Fig. 9, to observe the input referred noise density of the circuit. The proposed circuit produces an input referred noise voltage density of 31.5 nV/$\sqrt{Hz}$. The RMS input noise voltage over the 4.1 KHz of bandwidth of interest is 2.01 μV_{rms}. The obtained cut-off frequency, f_c, is $\approx$7 Hz which may have an adverse impact on the very low-frequency bio-medical signals. Hence, in future, further attempts will be taken to reduce f_c, primarily by increasing the transistor sizes.

Since all the transistors operate in WI region, hence temperature variation has a deep impact on the circuit performance. It is seen that the differential gain gradually reduces towards both

Authorized licensed use limited to: Zhejiang University. Downloaded on December 19,2025 at 06:52:42 UTC from IEEE Xplore. Restrictions apply.

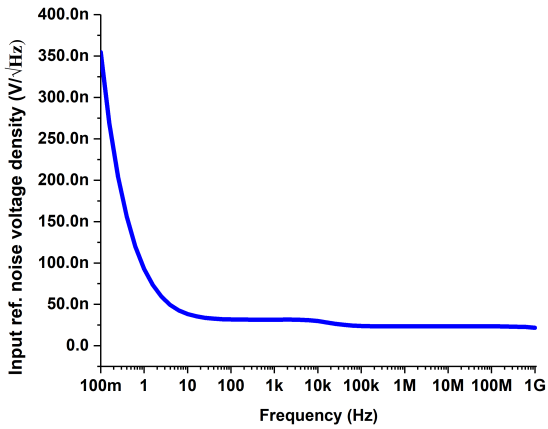

Fig. 9. Input referred noise power spectral density.

increasing and decreasing temperature with a peak differential gain lying at around ≈ 25°C.

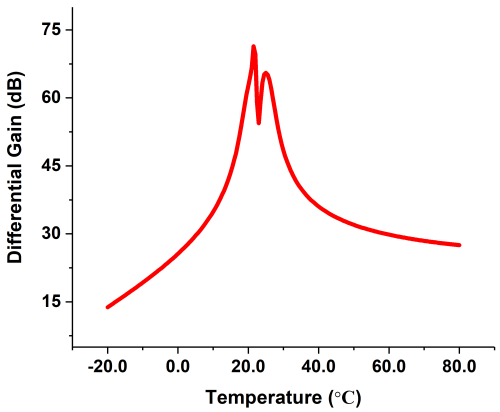

Fig. 10. Variation of the differential gain w.r.t. the temperature variation.

The power consumption of an electronic circuit is a product of voltage and current. Therefore, both supply voltage and the total current drawn from the power supply account for the total power consumption of the circuit. Since the proposed work is aimed for low-power applications, hence, by Fig. 11 we showed that our circuit is capable of drawing a minimum supply current of 144 nA to meet the design goal.

The performance of the proposed circuit is tabulated in Table I. Furthermore, comparative data of the performance of our proposed work and those of existing reported works are shown in tabular form in Table II. It is shown that the proposed work operates under a much lower supply voltage than that of the existing reported works. The total current drawn from the supply and total power consumption for the proposed work are both significantly lesser than the corresponding data of the reported circuits. Though the differential gain is comparable but the bandwidth of the proposed circuit is a bit less than the maximum bandwidth provided by most of the reported works in Table II.

As discussed earlier, our proposed circuit primarily aims for low-power bio-medical applications. Since most of the bio-medical signals have frequencies ranging between a few hundred of mHz to less than 10 KHz [1], [2], therefore, we can say that the bandwidth of the proposed work can satisfactorily serve our domain of application. Though there is a scope to improve the bandwidth further.

The work in [14] reports as large as 580 KHz of bandwidth with a large differential gain at the cost of higher supply voltage of 1.8 V, drawing a significantly larger supply current of 2.3 μA as compared to that of our proposed work. Even if the supply voltage of [14] is reduced to 0.6 V, due to the high current-requirement, the circuit will consume a total of 1.38 μW of power, which is still very much higher than 86 nW power consumption of our proposed work.

Most of the reported works show the response of the circuits to the noise by measuring input referred noise voltage density in nV/$\sqrt{Hz}$. Though some of the existing works in Table II have reported their noise performance in terms of input referred RMS noise voltage, $V_{irefrms}$. The works in [3], [5] and [6], reported $V_{irefrms}$ of 0.78 μV_{rms}, 1.34 μV_{rms} and 0.81 μ V_{rms}, respectively, over their respective integration bandwidth. Our proposed work produces a $V_{irefrms}$ of 2.03 μV_{rms} which is comparable to the above mentioned reported data.

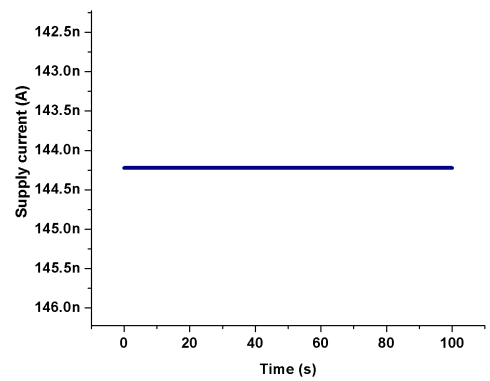

Fig. 11. Total current drawn from the supply by the proposed amplifier.

TABLE I
TABLE OF SPECIFICATIONS OF THE PROPOSED IA CIRCUIT.

Parameters	Values
Technology (μm)	0.18
Supply Voltage (V)	0.6
Supply Current (μA)	0.144
ICMR (V)	0.18 to 0.31
Differential Gain (dB)	61
Unity Gain Bandwidth (KHz)	4.1
Power Consumption (μW)	0.086
Input Noise (μV_{rms})	2.01

IV. CONCLUSION

An OTA-based self-biased ultra-low power instrumentation amplifier is designed in SCL 0.18 μm technology under 0.6 V supply voltage only. The amplifier is aimed for bio-medical

Authorized licensed use limited to: Zhejiang University. Downloaded on December 19,2025 at 06:52:42 UTC from IEEE Xplore. Restrictions apply.

TABLE II
TABLE SHOWING A COMPARISON OF PERFORMANCE BETWEEN THE PROPOSED WORK AND REPORTED WORKS.

Parameters	**Proposed Work**	[7]	[14]	[6]	[15]	[16]	[5]	[3]
Technology (μm)	**0.18**	0.18	0.18	0.35	0.065	0.18	0.18	0.18
Supply Voltage (V)	**0.6**	0.5/1.8	1.8	$\pm$0.75	1.8	1	1.8	1.8
Supply Current (μA)	**0.144**	7	2.23	-	260	3.8	18.2	43.8
Power Consumption (μW)	**0.086**	4.5	4.01	0.072-0.386	464.4	3.8	32.76	78.84
Differential Gain (dB)	**61**	60	70-220	20-40	52	39.9/59.8	30-40	40.04
Bandwidth (Hz)	**4.1 K**	300	580 K	7 K	-	1 K / 10 K	0.1-2.7 K	0.05-11 K
Input Referred Noise (nV/$\sqrt{Hz}$)	**31.5**	13	86.6	-	-	55.4	26.7	7.4

applications focusing mainly on implantable instruments that consume a minimum of power. Our proposed work operates at a very small supply voltage drawing the least supply current among all existing works to the best of our knowledge. Thus, the resulting power consumption is almost the least among all the reported data. Also, the proposed IA circuit is completely self-biased, hence it does not require any external current or voltage biasing atall. The amplifier produces a differential gain of 61 dB and aimed to amplify the bio-medical signals as low as 1 μV, which it performs efficiently. The 4.1 KHz operating bandwidth serves the bio-medical signal range quite well. The proposed work demonstrates 2.01 μV_{rms} input referred RMS noise voltage which is comparable with the existing reported works. Our next immediate attempt is to obtain variable differential gain over a wide range of signals in our domains of application. An attempt will be taken to improve the noise performance by reducing the noise cut-off frequency as well as the flicker noise. Also, an improvement in the response to temperature variation will also be taken care of. As the layout of the complete circuit with further optimization is yet to perform, hence, any comparison on the chip area of the proposed work and exsisting reported works cannot be presented in this article.

REFERENCES

[1] S. Kumaravel, A. Manoharan, and S. Bellamkonda, "Low noise low power CMOS telescopic-OTA for bio-medical applications," *Computers*, vol. 5, p. 11, 2016.

[2] K. Ito, T. Tani, T. Iwagami, S. Nishino, K. Kiyoyama, and T. Tanaka, "Development of bio-signal recording board system with agile control of circuit characteristics for various bio-signals," *Electronics and Communications in Japan*, vol. 101, no. 1, pp. 47–54, 2018.

[3] D. Das, A. Srivastava, J. Ananthapadmanabhan, M. Ahmad, and M. Shojaei Baghini, "A novel low-noise fully differential CMOS instrumentation amplifier with 1.88 noise efficiency factor for bio-medical and sensor applications," *Microelectronics Journal*, vol. 53, pp. 35–44, 2016.

[4] L. Safari, E. Yuce, and S. Minaei, "A new transresistance-mode instrumentation amplifier with low number of MOS transistors and electronic tuning opportunity," *Journal of Circuits, Systems and Computers*, vol. 25, p. 1650022, 2015.

[5] D. M. Das, A. Srivastava, A. Gupta, K. Barot, and M. S. Baghini, "A noise-power-area optimized novel programmable gain and bandwidth instrumentation amplifier for bio-medical applications," in *IEEE International Symposium on Circuits and Systems (ISCAS)*, 2017, pp. 1–4.

[6] C. Psychalinos, S. Minaei, and L. Safari, "Ultra low-power electronically tunable current-mode instrumentation amplifier for bio-medical applications," *AEU - International Journal of Electronics and Communications*, vol. 117, p. 153120, 2020.

[7] L. Fang and P. Gui, "A low-noise low-power chopper instrumentation amplifier with robust technique for mitigating chopping ripples," *IEEE Journal of Solid-State Circuits*, vol. 57, no. 6, pp. 1800–1811, 2022.

[8] S. Zhang, X. Zhou, C. Gao, and Q. Li, "A 130 dB CMRR instrumentation amplifier with common-mode replication," *IEEE Journal of Solid-State Circuits*, vol. 57, no. 1, pp. 278–289, 2022.

[9] H. Chandrakumar and D. Marković, "A simple area-efficient ripple-rejection technique for chopped biosignal amplifiers," *IEEE Transactions on Circuits and Systems II: Express Briefs*, vol. 62, no. 2, pp. 189–193, 2015.

[10] D. Agrawal and S. Maheshwari, "Cascadable current mode instrumentation amplifier," *AEU - International Journal of Electronics and Communications*, vol. 94, pp. 91–101, 2018.

[11] L. Safari and S. Minaei, "A novel resistor-free electronically adjustable current-mode instrumentation amplifier," *Circuits, Systems, and Signal Processing*, vol. 32, no. 3, pp. 1025–1038, 2012.

[12] K. Mukherjee, T. Sau, S. Upadhyay, S. Mitra, A. Bhowmik, S. Sarkhel, S. Pandit, and R. K. Pal, "A 588 nW, 1 nA current reference circuit with extremely low (0.002%/V) line sensitivity over a wide supply voltage range and low temperature coefficient," *International Journal of Numerical Modelling: Electronic Networks, Devices and Fields*, vol. 35, 2022.

[13] D. M. Binkley, C. Hopper, S. D. Tucker, B. C. Moss, J. M. Rochelle, and D. Foty, "A CAD methodology for optimizing transistor current and sizing in analog CMOS design," *IEEE Transactions on Computer-Aided Design of Integrated Circuits and Systems*, vol. 22, no. 2, pp. 225–237, 2003.

[14] G. Choi, H. Heo, D. You, H. Kim, K. Nam, M. Yoo, S. Lee, and H. Ko, "A low-power, low-noise, resistive-bridge microsensor readout circuit with chopper-stabilized recycling folded cascode instrumentation amplifier," *Applied Sciences*, vol. 11, no. 17, 2021.

[15] R. Nagulapalli, K. Hayatleh, S. Barker, S. Zourob, N. Yassine, S. Raparthy, and A. Tammam, "A novel high CMRR trans-impedance instrumentation amplifier for bio-medical applications," *Analog Integrated Circuits and Signal Processing*, vol. 98, pp. 233–241, 2019.

[16] Y. Zhou, M. Zhao, Y. Dong, X. Wu, and L. Tang, "A low-power low-noise bio-medical instrumentation amplifier using novel ripple-reduction technique," in *IEEE Biomedical Circuits and Systems Conference (BioCAS)*, 2018, pp. 1–4.

Authorized licensed use limited to: Zhejiang University. Downloaded on December 19,2025 at 06:52:42 UTC from IEEE Xplore. Restrictions apply.