Proceedings of the Fifth International Conference on Inventive Computation Technologies (ICICT-2020)
IEEE Xplore Part Number:CFP20F70-ART; ISBN:978-1-7281-4685-0

An Ultra Low Power Low noise Operational Transconductance Amplifier for Biomedical Front-end Applications

Chaya N [1], Anindita Ghosh [1], B Srinivas [1], Amit Jain[1]
[1]*Department of Electronics and Communication Engineering*
[1]CMR Institute of Technology
Bangalore, India

***Abstract*— This work represents a novel low noise amplifier, designed for biomedical front-end applications. The proposed circuit is designed using 180 nm CMOS technology. The simulation results exhibit very good performance showing a gain of 57.9 dB and unity gain bandwidth of 330 KHz. The proposed design shows enhanced phase margin of 84 degree due to its sub-threshold region of operation for the devices. The circuit performs under the supply voltage of 1.8 V and consumes only 400 nW of DC Power. The input-referred noise voltage of the designed circuit is obtained as $0.6\mu V/\sqrt{Hz}$ at 5 KHz, which makes it suitable for biomedical applications. Also, the CMRR of the designed circuit is obtained as 82.6 dB.**

***Index Terms*— Operational Transconductance Amplifier (OTA), Biomedical, Brain Machine Interface (BMI), Neural Amplifier, Low Noise, Low Power.**

I. INTRODUCTION

Brain machine interfaces have become one of the thrust areas of biomedical application where it is being used for treatment and monitoring of paralyzed patients [1-4]. The biomedical front-end receivers must consume very low power while satisfying all the design criterion. One of the most important blocks of the brain machine interface system is the front end neural signal amplifier, which consists of an OTA and feedback circuits. The signals received from the extracellular systems are very weak and therefore needs amplification [5-6]. Multi electrode neural recording systems are very important to gain knowledge about brain activities [7-9]. An implanted neural recording system requires ultra low power consumption to maximize battery life. Also to get very good recording the input referred noise voltage should be kept at the minimum level. Low noise amplifiers are also very important for wireless body area network applications [10-11]. OTAs are also being used extensively for designing various circuits such as regulators, filters and data converters [12].

Many designs have been reported in the literature for high performance OTA circuits [13-17]. The bulk driven tansconductance amplifiers are used for low voltage applications [18]. But for nMOS input core structure this technique requires complex twin-tub CMOS process [19]. Many OTAs have been designed with cascaded configuration which requires frequency compensation to improve the stability and phase margin of the designed circuit [20]. Folded cascode, though a very common approach for low voltage design, it consumes more power than the existing techniques [21-22]. Differential stage structure is widely used for OTA design due to its ability to reject common mode noise. A few designs have been reported where the MOSFETs are biased in saturation region [23-24], while in the design provided in refs [25] the MOSFETs are operated in triode region. For ultra low power applications sub-threshold operation of the MOS devices is the most widely accepted technique as it also favors the low voltage operations. In this work an OTA have been designed using two stage cascode topology considering sub-threshold region of operation. The design uses a PMOS core structure to reduce the noise contribution of the devices.

II. THE PROPOSED DESIGN

The designed OTA circuit is shown in Fig. 1. All the transistors are being operated in the sub-threshold region to reduce the power consumption. The bias current of the MOS transistors biased in sub-threshold region, increases exponentially with Vgs and it is expressed as [21]

$$I = \frac{W}{L} I_{D0} e^{\frac{qVgs}{nkT}} \tag{1}$$

Here I_{D0} can be represented as

$$I_{D0} = 2\mu_n C_{ox} \left(\frac{kT}{q}\right)^2 e^{-qV_{th}/nkT} \tag{2}$$

Authorized licensed use limited to: Zhejiang University. Downloaded on December 18,2025 at 13:17:07 UTC from IEEE Xplore. Restrictions apply.

Where n is the sub-threshold swing co-efficient of the transistor, k is the Boltzmann's constant, T is the absolute temperature and I_{D0} is a process dependent constant. The generalized expression of transconductance which is valid for all region of operation is expressed as [26]

$$g_m \approx \frac{\kappa I_D}{U_T} \frac{2}{1+\sqrt{1+4\cdot IC}} \tag{3}$$

Where κ is the sub-threshold gate capacitive coupling coefficient and U_T is thermal voltage. IC is known as the inversion coefficient. Depending on the values of the IC, the transistor's region of operation can be determined. For weak inversion operation the value of IC is less than 0.1. For moderate inversion region of operation the value is between 0.1 and 10. The value of IC should be greater than 10 for strong inversion operation.

To improve the gain of the designed circuit both the input and the output stage utilizes cascode configuration. Transistors M3 and M4 represent the cascode devices of the input stage where as M12 works as the cascode device for the output stage. The current mirror configuration has been used to bias the load transistors as shown in Fig. 1.

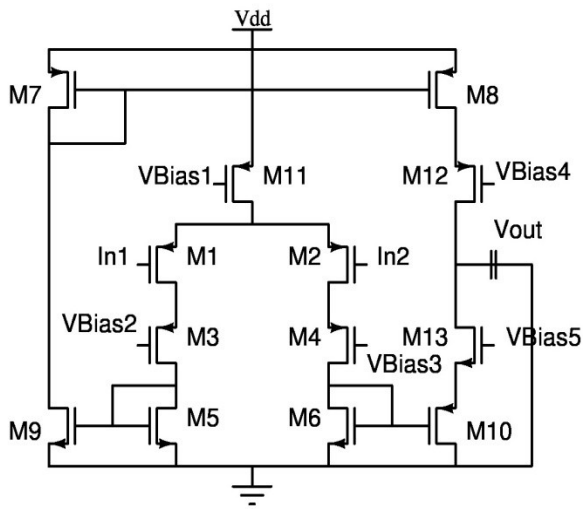

Fig. 1 The Schematic of the designed operational transconductance amplifier circuit

It is observed that the pMOS core structure has been used in the circuit to reduce the input referred noise [25]. The input transistors are of the same size and their width to length ration and the transconductance is represented as $(W/L)_1$ and g_{m1} respectively. Similar way the load transistors M5 and M6 have the size of $(W/L)_5$ and the transconductance g_{m5}. The transistors M7 and M8, represents current mirror transistors with the size of $(W/L)_7$ and the transconductance g_{m7}. The noise contributed by the MOSFETs is mainly the flicker noise and the thermal noise. The flicker noise is expressed as [27]

$$V_{Flicker}^2 = 2\left[\frac{K_P}{C_{OX}W_1L_1} + \frac{K_N}{C_{OX}W_5L_5}\left(\frac{g_{m5}}{g_{m1}}\right)^2 + \frac{K_P}{C_{OX}W_7L_7}\left(\frac{g_{m7}}{g_{m1}}\right)^2\right]\frac{\Delta f}{f} \tag{4}$$

It can be observed from the expression that flicker noise is mainly dependent on the sizes of the driver and load transistor of the first stage and the current mirror device of the 2nd stage. It is also very much dependent on the ratio of the transconductances of the load transistor to driver transistor and also on the ratio of the current mirror transistor to driver transistor. The thermal noise can be calculated as

$$V_{Thermal}^2 = 8KT\delta\frac{1}{g_{m1}}\left(1+\frac{g_{m5}}{g_{m1}}+\frac{g_{m7}}{g_{m1}}\right)\Delta f \tag{5}$$

It is evident that thermal noise is also dependent on the same ratio of the transconductances as that of the flicker noise but in case of flicker noise, it is the square of the ratio that is effective whereas for thermal noise it is only the ratio of the transconductances. So it is quite evident from the expressions that for the designed OTA, flicker noise is more dominant compared to thermal noise.

III. SIMULATION RESULTS AND DISCUSSIONS

The designed circuit is simulated using 180 nm CMOS technology at 1.8V supply voltage. The designed circuit has been simulated in cadence environment.

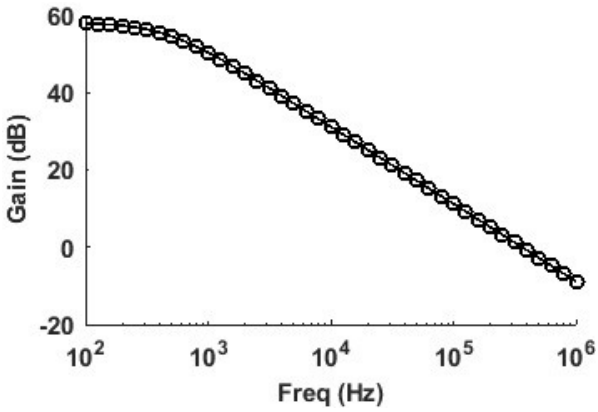

Fig. 2 Gain plot of the designed OTA

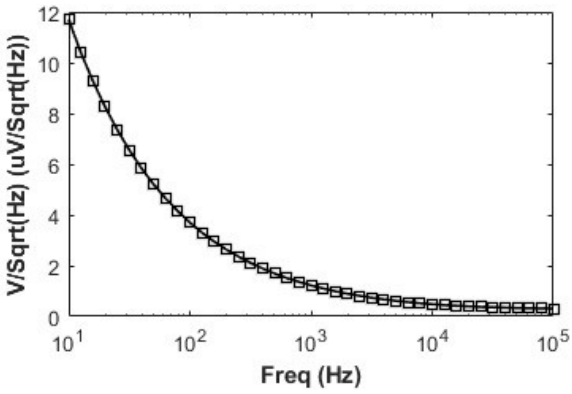

Fig. 3 Input referred noise voltage of the designed circuit

Authorized licensed use limited to: Zhejiang University. Downloaded on December 18,2025 at 13:17:07 UTC from IEEE Xplore. Restrictions apply.

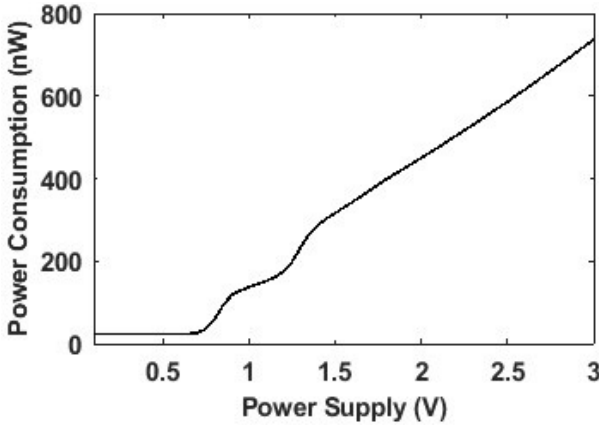

Fig. 4 Static power dissipation of the proposed circuit

The OTA shows the gain of 57.9 dB as noticed from Fig. 2. As observed from the AC analysis the unity gain bandwidth of the designed circuit is 330 KHz. The noise contribution of the circuit is measured in terms of input referred noise voltage. The spectral density of the input referred noise voltage is obtained as $0.6\mu V/\sqrt{Hz}$ at 5 KHz as shown in Fig. 3. As the devices are operating in sub-threshold region, the proposed circuit consumes as low as 400 nW of DC power as observed from Fig. 4. The xf analysis is performed to simulate for common mode gain of the designed circuit as shown in Fig. 5. The xf graph along with the differential plot is used to measure the common mode rejection ratio at different frequencies. The maximum value of the CMRR is obtained as 82.6 dB. The Phase margin of the circuit is measured as [28] 84 degree as demonstrated in Fig 6.

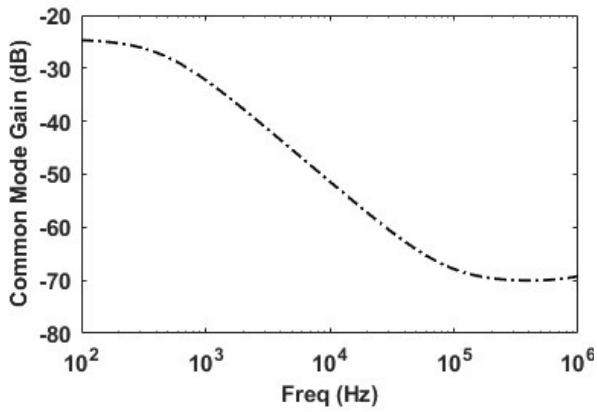

Fig. 5 Common mode gain of the designed OTA

Conclusion

In this work an ultra low power, low nose operational transconductance amplifier have been designed which can be used for any biomedical front-end applications. The proposed circuit consumes only 400nW of DC power while working at a supply voltage of 1.8V. Due to sub-threshold operation of the devices the phase

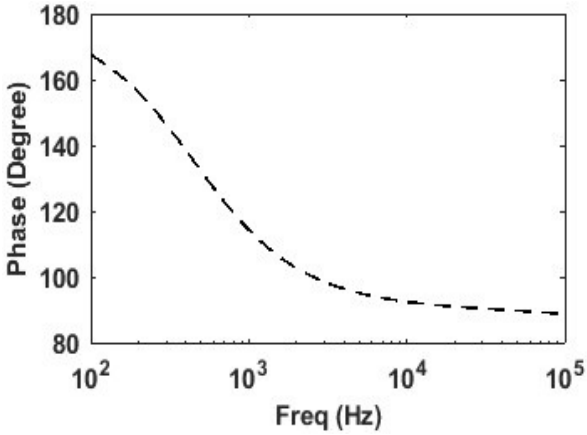

Fig. 6 Phase plot of the designed circuit

margin of the designed circuit is obtained as 84 degree. The noise contribution for the proposed circuit is measured as $0.6\mu V/\sqrt{Hz}$ at 5 KHz. A two stage cascode configuration has been used in the design to improve the gain of OTA. The gain the OTA is achieved as 57.9 dB. The maximum CMRR of the designed OTA is obtained as 82.6 dB. So it can be concluded that the proposed ultra low power OTA shows good performance for all the specifications taken into consideration.

REFERENCES

[1] K. L. Baishnab, K. Guha, S. Chanda, N. M. Laskar and D. Biswas, "A lowpower, lownoise amplifier for neural signal amplification in SCL 180 nm", In IEEE International Conference on Electron devices and solid-state circuits (EDSSC), Hsinchu, pp 1–2, 2017. https://doi.org/10.1109/EDSSC.2017.8333234.

[2] T. –Y. Wang, M. –R. Lai, C. M. Twig and S. –Y. Peng, "A Fully Reconfigurable Low-Noise Biopotential Sensing Amplifier With 1.96 Noise Efficiency Factor", IEEE Trans. Biomed. Circuits Syst, Vol. 8, No. 3, pp. 411-422, 2014.

[3] C. M. Lopez, D. Prodanov, D. Braeken, I. Gligorijevic,W. Eberle, C. Bartic, R. Puers, and G. Gielen, "Multichannel integrated circuit for electrical recording of neural activity, with independent channel programmability," *IEEE Trans. Biomed. Circuits Syst.*, vol. 6, no. 2, pp. 101–110, 2012.

[4] J. Lee, H. Rhew, D. R. Kipke, and M. P. Flynn, "A 64 channel programmable closed-loop neurostimulator with 8 channel neural amplifier and logarithmic ADC," *IEEE J. Solid-State Circuits*, vol. 45, no. 9, pp. 1935–1945, 2010.

[5] E. Bharucha, H. Sepehrian and B. Gosselin, "A survey of neural front end amplifiers and their requirements toward practical neural interfaces", J Low Power Electron Appl., Vol. 4, No. 4, pp. 268–291, 2014.

[6] Y. Feng, W. Zhigong and L. Xiaoying, "A multi-channel analog IC for in vitro neural recording", J Semiconduc Vol. 37, No. 2, pp. 025007, 216.

[7] N. M. Laskar et al., "Design of high gain, high bandwidth neural amplifier IC considering noise-power trade-off", Microsystem technologies. https://doi.org/10.1007/s00542-018-4142-5.

[8] Reid R. Harrison and C. Charles, "A Low Power Low Noise CMOS Amplifier for Neural Recording Applications" *IEEE J. Solid-State Circuits*, Vol. 38, No. 6, pp. 958-964, 2003.

[9] A. C. Hoogerwerf and K. D.Wise, "A three-dimensional microelectrode array for chronic neural recording," *IEEE Trans. Biomed. Eng.*, vol. 41, pp. 1136–1146, Dec. 1994.

[10] V. Reddy, P. Sammeta, R. Kumari, N. A. Quadir and Amit Jain "A 0.5 VLNA Design for 2.4 GHz Wireless Body Area

Authorized licensed use limited to: Zhejiang University. Downloaded on December 18,2025 at 13:17:07 UTC from IEEE Xplore. Restrictions apply.

Network Applications", ICECA, 2019. 10.1109/ICECA.2019.8821857

[11] V. Reddy, K. Sravanil and K. H. Prasantha, "A 280uW High Gain Inductively Degenerated LNA for Medical Radio Communication" *Int J Circ Theor. App*", vol. 9, no. 20, pp. 165-173, 2016.

[12] F. Rezaei, S. J. Azhari, "Ultra low voltage, high performance operational transconductance amplifier and its applications in tunable Gm-C filters", *Microelectron. J.* Vol. 42, pp. 827–836, 2011.

[13] P. Shetty, S. Bhat, "A survey of circuit level techniques for designing ultra low power, low frequency OTA, *Int. J. Comput. Inf. Tecchnol*. Vol. 03, No. 06, pp. 1274-1279, 2014.

[14] F. Khateb, S. B. A. Dabbous and S. Vlassis, "A survey on non-conventional techniques for low-voltage, low-power analog circuit design, *Radio engineering,* Vol. 22, pp. 415-427, 2013.

[15] A. Guzinski, M. Bialko and J. C. Matheau, "Body driven differential amplifier for application in continuous-time active-C filter, in Proceedings of European conference Circuit Theory and Design (ECCTD), pp. 315-320, 1987.

[16] Y. Haga, H. Z. Hoseini, L. Berkovi and I. Lale, "Design of a 0.8V fully differential CMOS OTA using the bulk-driven technique, in Proceedings of IEEE International Symposium on Circuit and Systems (ISCAS), pp. 220-223, 2005.

[17] B. J. Blalock, P. E. Allen and G. A. Rincon-Mora, "Designing 1-V opamps using standard digital CMOS technology, *IEEE Trans. Circuits Syst. II. Analog Digit. Signal Process*, Vol. 45, No. 7, pp. 769-780, 1998.

[18] G. Raikos and S. Vlassis, "0.8V bulk-driven operational ammpifier, Analog Integr. Circuits Signal Process. Vol. 63, pp. 425-432, 2010.

[19] J. M. Carrillo, J. F. Duque-Carrillo and G. Torelli, "1-V Continuously tunable CMOS bulk-driven transconductor for gm-C filters, in Proceedings of IEEE ISCAS, pp. 896-899, 2008.

[20] T. Sharan and V. Vaduria, "Sub-threshold, cascode compensated, bulk-driven OTAs with enhanced gain and phase-margin" Microelectronics Journal, vol. 54, pp. 150-165, 2016.

[21] A. N. ragheb and H. W. Kim, "Ultra-low power OTA based on bias recycling and sub-threshold operation with phase margin enhancement", *Microelectron. J.*, Vol. 60, pp. 94-101, 2017.

[22] M. Akbari, O. Hashemipour, Enhancing transconductance of ultra-low-power two stage folded cascode OTA, *Electron. Lett.*, Vol. 50, No. 21, pp. 1514-1516, 2014

[23] J. Silva-Martinez, M.S. Steyaert and W.M. Sansen, "A large-signal very low-distortion transconductor for high-frequency continuous-time filters", *IEEE J. solid-state circuits*, Vol. 26, No. 7, pp. 946-955, 1991

[24] Y.-T. Wang, F. Lu and A. A. Abidi, "A 12.5 MHz cmos continuous time band pass filter, In: Solid-state Circuits Conference, Digest of Technical Papers. 36th ISSCC., 1989 IEEE International, IEEE, 1989, pp. 198–199.

[25] S. Wong, "Novel drain-biased transconductance building blocks for continuous-time filter applications", *Electron. Lett.,* Vol. 25, No. 2, pp. 100-101, 1989.

[26] Sung-I1 Chang, S. –Yun Park and E. Yoon, "Low-Power Low-Noise Pseudo-Open-Loop Preamplifier for Neural Interfaces", IEEE Sensors J., Vol. 15, No. 17, pp. 4843-4852, 2017.

[27] M. Akbari, M. Nazari, L. Sharifi and O. hashemipour, "Improving power efficiency of a two-stage operational amplifier for biomedical applications", *Analog Integr Circ Sig Process*, Vol. 84, pp. 173-183, 2015.

[28] S. Liu, Z. Zhu, J. Wang, L. Liu and Y. Yang, "A 1.2-V 2.41-GHz Three-Stage CMOS OTA With Efficient Frequency Compensation Technique", IEEE Trans. Circuits Syst. I,, Vol. 66, No. 1, pp. 20-30, 2018.

Authorized licensed use limited to: Zhejiang University. Downloaded on December 18,2025 at 13:17:07 UTC from IEEE Xplore. Restrictions apply.