Using Bulk-driven Technology Operate in Subthreshold Region to Design a Low Voltage and Low Current Operational Amplifier

Cheng-Fang Tai, *Member*, IEEE, Jui-Lin Lai and Rong-Jian Chen, *Senior Member*, IEEE

Abstract —*The paper deeply investigate the characteristics of a MOSFET device using the bulk-driven technique to operate in subthreshold region for low current, low input voltage, high open loop gain, low power consumption, and low noise. It can used to design the low voltage amplifier to improve the limitation for the V_{GS} voltage and the saturation voltage within the amplifier. The low voltage and current operation amplifier is applied, and the source cross-coupled pair is used within the differential input. The static current of the amplifier is effectively reduced. Using HSPICE to simulate the characteristics of the amplifier for the TSMC 0.18μm CMOS technology is verified. As the result shown that V_{DD}= 0.6V, power consumption< 10μW, open loop gain= 70dB. The variation of amplifier for the supplied voltage to the temperature is improved by the negative temperature for the operated sub-threshold region. The used bulk-driven CMOS device in sub-threshold is exactly designed in the operation amplifier for low-voltage and low-power.*[1].

Index Terms —Bulk-driven, Sub-threshold, Operation amplifier, Source cross-coupled pair.

I. INTRODUCTION

Due to a high degree of the process complexity and technology are rapidly improved in the VLSI technology. It is well know that in the low-voltage and low-power circuit design to reduce the supply voltage and power dissipation for the portable electronic product or biomedical device applications. Circuit operation at the lower supply voltage is a commonly adopted to reduce the power consumption [1]. The circuit performance may be involved to get low circuit bandwidth and voltage swing at low voltage. At low-voltage, the main concerns focused are the noise level and the threshold voltage (V_{Th}) for the device. The voltage V_{Th} is based on the device technology. The lower V_{Th} is one of main methods used to design the low supply voltage circuit, but reduce the noise margin of device to obtain a poor SNR.

Many new design techniques for low-voltage analog circuits are presented. The bulk-driven technique is a strong manner used in op-amp design for low-voltage operation [2]-[5]. Use this technique to design a low-power CMOS operational transconductance amplifier operating with supply voltage above 0.8V, and open loop gain 70dB has been reported [9]-[11]. In sub-threshold region, MOSFET have low saturation voltages to get larger output voltage swing at low-supply voltage. The characteristics of sub-threshold were used in the circuit design to increase the gain and reduce the supply voltage [6]-[8].

In the paper, the operational amplifier with source cross-coupled pair input used bulk-driven technique to operate in sub-threshold region is presented. The simulation results for the characteristics of the op-amp are demonstrated and analyzed. The amplifier supply voltage (V_{DD}) is 0.6V, power consumption< 10μW, and open loop gain= 70dB is verified by the TSMC 0.18μm CMOS technology. The power consumption of op-amp used by bulk-driven technique is improved.

The papers organized as follows. In Section II, the bulk-driven technology is reviewed. Section III describes the properties of MOS in subthreshold region. In Section IV, the bulk-driven operational amplifier is proposed. Section V demonstrate and analyze the results for the op-amp. Finally, conclusions are drawn.

II. THE BULK-DRIVEN TECHNOLOGY

The bulk-driven technique normally used for low voltage analog circuits. The bulk-driven MOSFET structure acts similarly to a JFET [1]. The applied gate voltage is able to control the current flow in the channel between the source and drain of the MOSFET. The channel width can be changed by modified either the gate or bulk bias. The bulk contact serves the function of the gate that to modulate the channel width according to the applied voltage and the gate bias is hold constant. Thus the bulk-driven MOSFET can operates with negative, zero, or slightly positive bias voltage, as a depletion type device. The characteristics of gate-driven and bulk-driven operation for an nMOS transistor are shown in Fig.1.

In the gate-driven, the gate-to-source voltage must be greater than the threshold voltage which is approximately 0.6V. The drain current is increased by the bias applied into bulk-to-source is positive going increase from -3V in the bulk-driven case. Thus, the negative voltage or zero-bias

[1] Cheng-Fang Tai is with the Department of Electronic, National United University, Miao-Li, 360, Taiwan (e-mail:billtai@nuu.edu.tw).

Jui-Lin Lai is with the Department of Electronic, National United University, Miao-Li, 360, Taiwan (e-mail: jllai@nuu.edu.tw).

Rong-Jian Chen is with the Department of Electronic, National United University, Miao-Li, 360, Taiwan (e-mail:rjchen@nuu.edu.tw).

1-4244-0216-6/06/$20.00 ©2006 IEEE

Authorized licensed use limited to: Zhejiang University. Downloaded on December 17,2025 at 11:15:53 UTC from IEEE Xplore. Restrictions apply.

applied at the input node, the drain current of transistor is still controlled to work in the active region. This characteristic is used to design a low-supply voltage amplifier or other analog circuits.

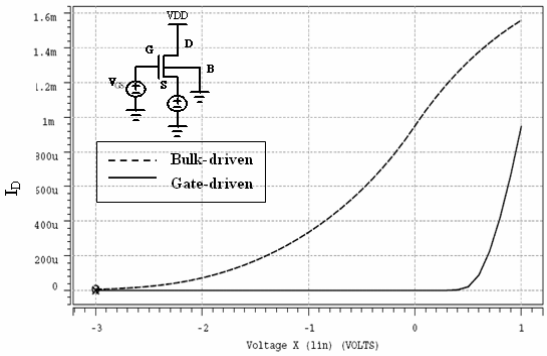

Fig. 1 The characteristics of gate-driven and bulk-driven nMOSFET

The leakage current of MOSFET is key problem for a low-power circuit design. The effect can be simulated by sweeping the voltage of V_{BS} to various V_{GS} bias. The leakage current of bulk terminal is below 4pA for alls applied condition. The result of the simulation is shown in Fig. 2. Bulk-driven MOSFETs are fabricated in difference wells to isolate bulk terminals. Must to be care to process the fabrication to avoid appear the latch up problem produce the larger leakage current, and the matching between difference wells suffers. Then, the bulk-driven transistors are suitable used to design in the low-current circuits.

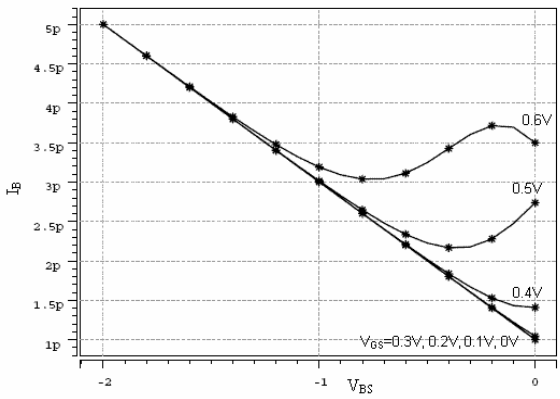

Fig. 2 The leakage current for bulk-driven nMOSFET

The saturation drain current of bulk-driven transistor with $V_{DS} \leq$ and $\geq V_{DS}(sat)$ are expressed as in (1) and (2), respectively [8].

$$i_D = \mu C_{OX} \frac{W}{L}\left(v_{GS} - V_{TH0} - \gamma\sqrt{2\phi_F - v_{BS}} + \gamma\sqrt{2\phi_F} - \frac{1}{2}v_{DS} \right) v_{DS}, \quad v_{DS} \leq v_{DS}(sat) \tag{1}$$

$$i_D = \frac{1}{2}\mu C_{OX} \frac{W}{L}\left(v_{GS} - V_{TH0} - \gamma\sqrt{2\phi_F - v_{BS}} + \gamma\sqrt{2\phi_F} \right)^2 \left(1 + \lambda v_{DS}\right), \quad v_{DS} \geq v_{DS}(sat) \tag{2}$$

The transconductance of bulk-driven transistor g_{mb} is leaded from (3). It is to know, g_{mb} of a bulk-driven transistor is smaller than g_m of a gate-driven transistor in (4), and the both bandwidths are related as (5). As the results, the bulk-driven technique adopted for the amplifier design obtain the high open-loop gain is a highly challenge.

$$g_{mb} = \frac{-\partial i_D}{\partial v_{SB}} = -\left(\frac{\partial i_D}{\partial V_{Th}}\right)\left(\frac{\partial V_{Th}}{\partial v_{SB}}\right) \tag{3}$$

$$g_m = \left(\frac{\partial i_D}{\partial v_{GS}}\right) = -\left(\frac{\partial i_D}{\partial V_{Th}}\right)$$

$$g_{mb} = g_m \frac{\gamma}{2\left(2|\phi_F| + |V_{SB}|\right)^{1/2}} \tag{4}$$

$$f_{T,bulk-driven} \approx \frac{\eta}{3.8} f_{T,gate-driven} \tag{5}$$

The bulk-driven devices allowed its input range extended to the largest possible negative range. Using differential pair with bulk-driven to design the input stage of the op-amps efficiently improve their input common-mode range (ICMR) and the common mode rejection rate (CMRR) than used gate-driven devices.

III. SUBTHRESHOLD REGION

When the gate-source voltage of device reached the value desired as V_{ON}, the drain current change from square-law to an exponential-low behavior. The device operating in the region where V_{GS} is below the threshold voltage is called the subthreshold or weak-inversion region [1], [8]. The applied drain voltage exceeds the threshold voltage in a MOSFET; the subthreshold drain current I_{DS} flow in the channel in the subthreshold region is given by.

$$I_{DS} = \frac{2K'W}{L}\left(\frac{nKT}{qe}\right)^2 \exp\left(\frac{q(V_{GS} - V_{TN})}{nKT}\right) \tag{6}$$

where n is the subthreshold slope factor (1<n<3). Parameters q, K, V_{TN}, and T represent the electronic charge, Boltzman constant, threshold voltage of nMOSFET and temperature, respectively.

MOSFET active in subthreshold region, V_{DS} is a low saturation voltage to give the larger voltage swing at low-supply voltage even than cascaded structure. The weak electric-field intensity does not produce enough energy to move the around of electrons. The subthreshold drain current is only diffusion current. The linearity is quite poor for V_{DS} small than $3V_T$.

The temperature behavior of the MOS device operating in the subthreshold region, the temperature coefficient of the threshold voltage is negative, subthreshold current increase as the temperature increase for a given gate-source voltage. The variation of current due to temperature of a device operating in the subthreshold region is dominated by the negative temperature coefficient. The effect of temperature

Authorized licensed use limited to: Zhejiang University. Downloaded on December 17,2025 at 11:15:53 UTC from IEEE Xplore. Restrictions apply.

is able to compensate the positive temperature coefficient for the bias supply circuit that provides the regulated bias to the op-amp.

The MOS device operated in subthreshold region is a best chose for low-power circuit. It is provided the larger transconductance than in other regions. The circuit used the device can increasing the overall open-loop gain, but the frequency response of the circuit is poor. Further, these circuit operated in the subthreshold region are suitable used to design in the low-voltage, low-current, and low-frequency circuit applications, not suitable for medium power or high-frequency circuits.

IV. THE BULK-DRIVEN OPERATIONAL AMPLIFIER

The operational amplifier used bulk-driven technique to operate in subthreshold region for low-supplied voltage and low-consumption is shown in Fig. 3. The amplifier must produce enough gain to overcome the gain reduction is induced by the bulk-driven device operate in subthreshold region. The used devices must provide high output impendence to obtain high-gain input stage. For high gain, the cascode differential pair structure is implied to increase the gain but it decrease the output signal swing at the same time [1]. Therefore, the source cross-coupled pair is used in the differential input stage to improve the overall performance of the operational amplifier.

The operational amplifier with source cross-coupled pair is able to operate at 0.6V supply voltage. The operation point current of source cross-coupled pair differential circuit is designed to operate in low quiescent current. The matched MOS devices M_3, M_4, M_5, and M_6 are consist of the source cross-coupled pair differential amplifier. The active load devices M_1, M_2, M_7, and M_8 are the small ratio of W/L and matching with each others. The devices M_3a~M_8a are provide a constant current to support a current source for cross-coupled pair. The devices is properly design to decrease the operation current that the quiescent current is 0.25nA at zero differential input voltage, as shown in Fig. 4.

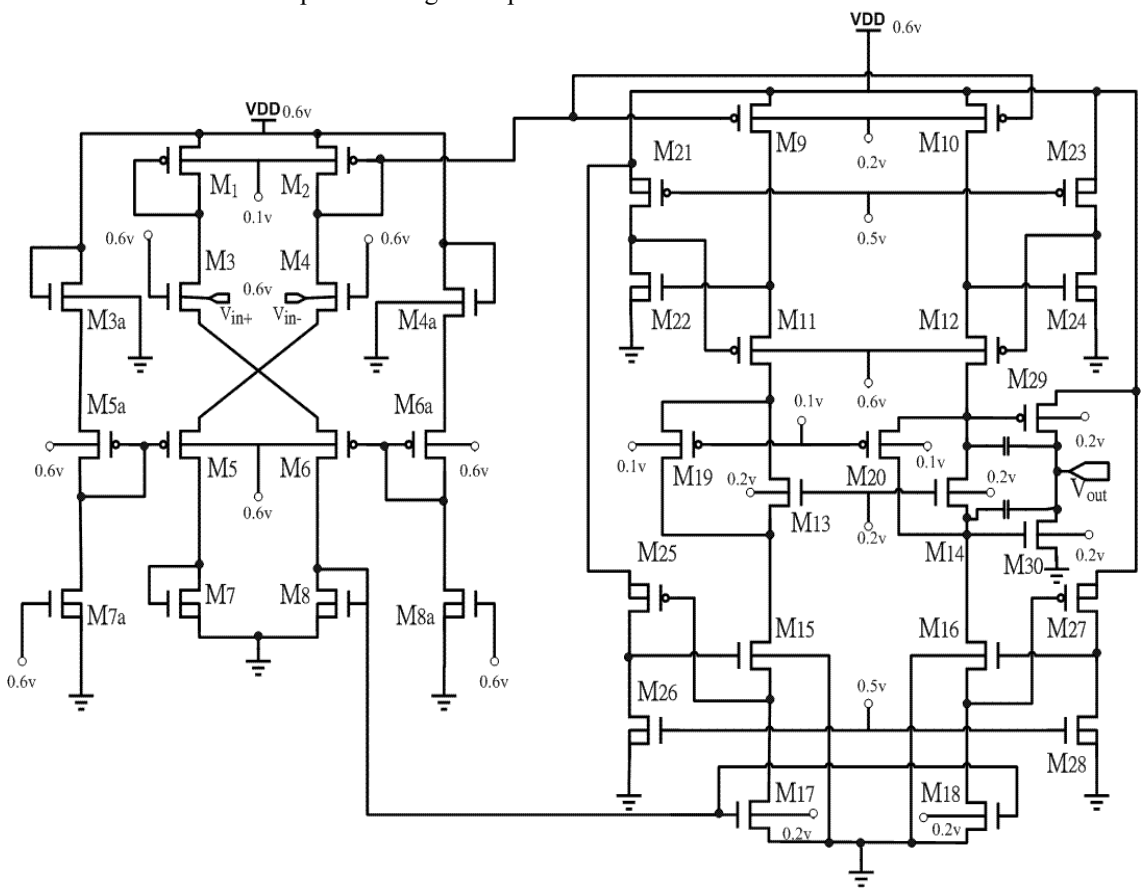

Fig. 3 Proposed operational amplifier

In the Fig. 3, the pairs (M_{21} M_{22}), (M_{23} M_{24}), (M_{25}, M_{26}), and (M_{27}, M_{28}) are combine 4-set common source amplifier to increase the open loop gain base on the ratio of W/L, that is gain Av is $-gm(ro_{21}//ro_{22})$ at first pair.

The devices pMOS (M_9, M_{10}, M_{11}, and M_{12}) and nMOS (M_{15}, M_{16}, M_{17}, and M_{18}) are constructed a cascode circuits with high output resistance. The M_{14} and M_{20} are the floating current source that is efficiently isolates the loading effect. The (M_{12}, M_{10}) and (M_{16}, M_{18}) are cascade current source, respectively. When positive voltage applied to the

Authorized licensed use limited to: Zhejiang University. Downloaded on December 17,2025 at 11:15:53 UTC from IEEE Xplore. Restrictions apply.

source of M_{20}, then M_{20} and M_{30} are in on state, M_{29} is in off state, whereas, the states are inversed. The push-pull amplifier (M_{29}, M_{30}) can enhance the output voltage swing range.

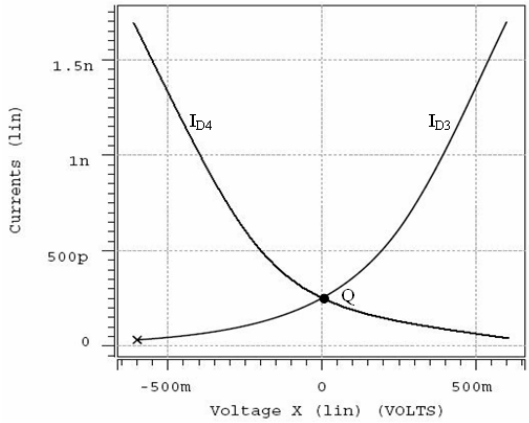

Fig. 4 source cross-coupled pair current

The bulk-driven operational amplifier need very stable biasing circuit to support the regulated bias current to operate in subthreshold region. The results in references that have very litter dependence on temperature and power supply. The design of the bias circuit is appeased the importance for the regulation and the effective of temperature. The MOS devices in subthreshold region to have the negative temperature coefficient for the drain current are dominated by the positive temperature coefficient for the resistor.

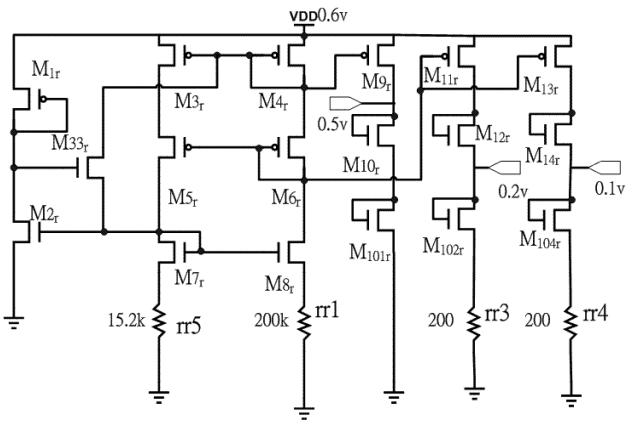

Fig. 5 Biases circuit

The bias circuit supplied the reference voltages to the op-amp are shown in Fig. 5. The devices M_{1r}, M_{2r}, and M_{33r} are hold the current of operating point, M_{3r}~M_{8r}, r_{r1}, and r_{r5} are to form the current mirror with temperature compensation. The required reference bias 0.5V, 0.2V, and 0.1V are provided by the devices (M_{9r}, M_{10r}, M_{101r}), (M_{11r}, M_{12r}, M_{102r}), and (M_{13r}, M_{14r}, M_{104r}), respectively. The precision is determined by the correct ratio of devices W/L.

The proposed operational amplifier is design with bulk-driven in subthreshold region to reach the requirement of low supply voltage and low power consumption. The bias circuit provides the band-gap reference voltages 0.5V, 0.2V, and 0.1V that can generate the reference having a small temperature coefficient that is approximation below 50 ppm /° C for each output reference voltages.

V. Simulation Results

The integrated circuits of the operational amplifier are simulated by the HSPICE for the TSMC 0.18μm 1P6M technology. The supply voltage is applied 0.6V to the amplifier that the observed value of the totally static power dissipation is 9.747μW. The maximum swing range of output voltage of the amplifier from 0V to 500mV is shown in Fig. 6. The characteristics of op-amp are simulated to find the results with 70dB of open-loop gain and 74° of phase margin. The frequency response of the amplifier is expressed in the Fig. 7. The proposed operation amplifier with low-voltage and low-power consumption is successfully verified.

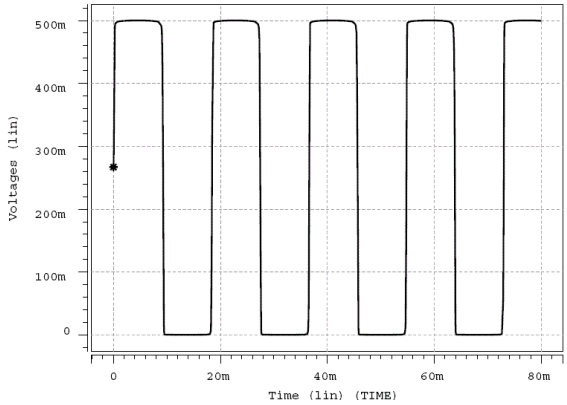

Fig. 6 Output swing

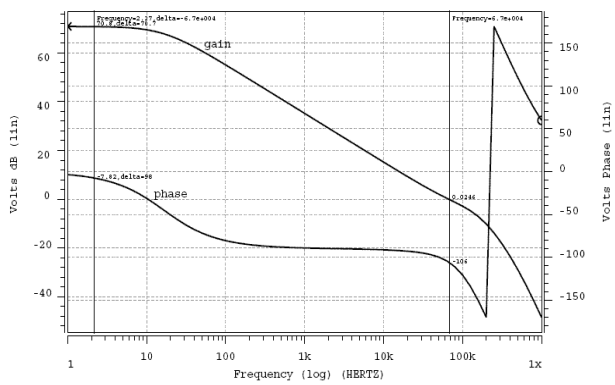

Fig. 7 Frequency response for the op-amp (Gain=70dB, PM=74°)

The common-mode reject ratio of the operational amplifier is 105dB, which is the differential amplifier provided the larger differential gain, as shown in Fig. 8. The op-amp is also provided the higher ratio of the power supply rejection for the positive and negative terminals to improve the capability of the noise immunity for power supply. The bulk-driven amplifiers effectively inhibit the noise and reduce the effect for the noise.

Authorized licensed use limited to: Zhejiang University. Downloaded on December 17,2025 at 11:15:53 UTC from IEEE Xplore. Restrictions apply.

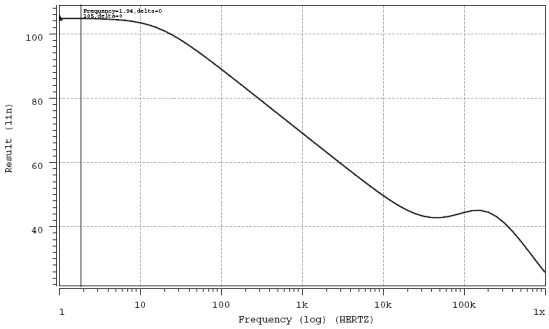

Fig. 8 CMRR (105dB)

The variation of the bias to the temperature between 30°C and 45°C suitable for bio-medical or human-body applications is simulated. The temperature coefficients are obtained at 22ppm/°C, 30ppm/°C, and 43ppm/°C according to the various bias voltages at 0.5V, 0.2V, and 0.1V, respectively.

.

VI. CONCLUSION

In the paper, using the bulk-driven MOS devices operated in subthreshold region to design an op-amp with low-current, low-input voltage, high-open loop gain, and low-noise. The source cross-coupling pair circuit used in the input stage of the op-amp that is decrease the static current to reach 0.25nA. The bulk-driven technique is having the low-noise property that can be improved the op-amp with low-current to noise effect. The proposed op-amp is supplied 0.6V supply voltage, provided 70dB open-loop gain and power consumption less than 10μW are successfully verified by the TSMC 0.18μm technology. Moreover, the op-amp using bulk-driven technique to operate in subthreshold region can be used in the portable electronic product and the bio-sensor for biomedical science applications.

REFERENCES

[1] S. S. Rajput and S.S. Jamuar, "Low Voltage Analog Circuit Design Techniques," *Circuit and System Magazine, IEEE*, vol.2, Issue: 1, pp.24-42, 2002

[2] B. J. Blalock and P. E. Allen, "A Low-Voltage, Bulk-Driven MOSFET Current Mirror for CMOS Technology," *IEEE International Symposium on Circuits and Systems, ISCAS '95.* , vol. 3, 1995, pp. 1972-1975.

[3] K. Lasanen, E. R. Ruotsalainen, J. Kostamovaara, "A 1-V 5μW CMOS-Opamp with Bulk-Driven Input Transistor," *Proc. 43rd IEEE Midwest Symp. on Circuit and System*, Aug 2000, pp. 1038-1041.

[4] I.Grech, J. Micallef, G. Azzopardi, and C. J. Debono, "A 0.9V Wide-Input-Range Bulk-Driven CMOS OTA for Gm-C Filters," *IEEE Circuits and System*, vol. 36, pp. 1082-1086, July 2001.

[5] J. Rosenfeld, M. Kozak, and E. G. Friedman, "A Bulk-Driven CMOS OTA with 68dB DC Gain," *11th IEEE International Conference. On Circuits and Systems, ICECS 2004*, Dec. 2004, pp. 5-8.

[6] G. Giustolisi, G. Palumbo, M. Criscione, and F. Cutri, "A Low Voltage Low Power Voltage Reference Based on Subthreshold MOSFETs," *IEEE Journal of Solid State Circuits*, vol. 38, NO. 1, pp.151-154, January 2003..

[7] C. Popa and D. Coada, "A new linearization technique for a CMOS differential amplifier using bulk-driven weak inversion MOS transistors," International Symposium on Signals, Circuits and Systems, Vol. 2, July 2003, pp.589 – 592.

[8] P. E. Allen and D. R. Holberg, CMOS Analog Circuit Design, Qxford University Press, Second Edition, 2002..

[9] R. Rao, A. Srivastava, D. Blaauw, and D. Sylvester, "Statistical Analysis of Subthreshold Leakage Current for VLSI Circuits," *IEEE Transactions on Very Large Scale Integration Systems*, vol. 12, NO. 2, pp. 131-139, Feb. 2004..

[10] Zhangming Zhu and Yintang Yang, "A 0.8 V low-power CMOS PTAT voltage reference," *IEEE International Workshop on VLSI Design and Video Technology*, May 2005 , pp.1 – 5.

[11] Y. Haga, H. Z. Hoseini, L. Berkovi, and I. Kale, "Design of A 0.8Volt Fully Differential CMOS OTA Using the Bulk-Driven Technique," *IEEE Circuits and Systems*, vol. 1, pp.220-223, 2005.

Cheng-Fang Tai (M'01) received the B.S degree from the Industry Education Department, National Taiwan Normal University, Taipei, Taiwan, 1970. He received the M.S degree in the Electrical and Computer Engineering from the Clarkson University, New York, U.S.A.., in 1984.

In 1986, he joined the faculty of Electronics Engineering Department, National Lien-Ho Institute of Technology, where, in 2003, the Institute was upgraded and renamed as the National United University. He currently is the Professor in this University. His research interests are in analog VLSI design and computer architecture..

Jui-Lin Lai (M'01, SM'04) received the B.S degree from the Electronic Engineering, National Taiwan University of Science and Technology, Taiwan, 1984. He received the M.S and Ph.D degree in the Institute of Control Engineering and the Institute of Electronic Engineering from the National Chiao-Tung University, Taiwan, R.O.C., in 1990 and 2004, respectively.

In 1984, he joined the faculty of Electronics Engineering Department, National Lien-Ho Institute of Technology, where, in 2003, the Institute was upgraded and renamed as the National United University. He was the chair of the Department of Electronics Engineering during the 1993-1996 academic years. He currently is the Associative Professor in this University. His research interests are in analog VLSI design, neural networks, and computer architecture.

Rong-Jian Chen (M'02, SM'04) received the B.S, M.S., and Ph.D. degrees in electronic engineering from the National Taiwan University of Science and Technology, Taiwan, in 1987, 1991, and 1995, respectively. He joined the faculty of the National Lien-Ho Institute of Technology in August 1995, where he was the Chair of the Department of Electronic Engineering during 1999-2001 academic years. At present, he is an Associate Professor of the Department of Electronic Engineering, National United University. His research interests include digital image/video processing, neural networks, VLSI design, biosensors/biochips, and nanotechnology.

Authorized licensed use limited to: Zhejiang University. Downloaded on December 17,2025 at 11:15:53 UTC from IEEE Xplore. Restrictions apply.