A 1.2-V 2.87-μW 94.0-dB SNDR Discrete-Time 2-0 MASH Delta-Sigma ADC

Lingxin Meng, Yaopeng Hu, *Student Member, IEEE*, Yibo Zhao, *Member, IEEE*, Wanyuan Qu, *Member, IEEE*, Le Ye, *Senior Member, IEEE*, Menglian Zhao, *Member, IEEE*, and Zhichao Tan, *Senior Member, IEEE*

***Abstract*— This article presents a fully dynamic 2-0 multistage noise-shaping (MASH) analog-to-digital converter (ADC) for low-power and high-precision applications. It implements the feedforward digitally with a 3-bit asynchronous successive-approximation-register (SAR) ADC and reuses it as the zeroth backend stage. Correlated level shifting (CLS) boosts the floating inverter amplifier (FIA) gain, embedded in the loop filter to implement integration. Dynamic body-biasing (DBB) technique helps boost the gain of a single-stage FIA with only one reservoir capacitor. Fabricated in 55-nm CMOS technology, the prototype ADC achieves measured SNDR of 94.0 and 96.9 dB dynamic range (DR) in 1-kHz BW at an oversampling ratio (OSR) of 125 while only consuming 2.87 μW. It results in an SNDR-based Schreier figure-of-merit (FoM) of 179.4 dB and a DR-based FoM of 182.3 dB.**

***Index Terms*— Analog-to-digital converter (ADC), correlated level shifting (CLS), dynamic amplifier (DA), floating inverter amplifier (FIA), multistage noise-shaping (MASH).**

I. Introduction

POWER-EFFICIENT analog-to-digital converters (ADCs) are in high demand for low-bandwidth, high-precision applications due to the unprecedentedly rapid development of smart sensors, health care, and Internet-of-Things (IoT).

$\Delta\Sigma$ modulators (DSMs) are widely used for high precision thanks to the oversampling and noise shaping (NS), but power-hungry integrators with finite gain and swing are the bottlenecks [1], [2], [3], [4]. Successive-approximation-register (SAR) ADC is energy-efficient, but high-precision SAR ADC design faces the challenges of large thermal noise owing to the small oversampling ratio (OSR) and the nonlinearity caused by element mismatch. Emerging NS SAR ADC partially solves the problem, but it can hardly achieve a resolution over 16-bit without the aid of large input capacitance and calibration [5], [6], [7]. Multistage noise shaping (MASH) structures can achieve a high dynamic range (DR) but strongly depend on the matching of analog and digital transfer function [8], [9], [10]. Zoom structures are suitable for the application mentioned above but suffer from signal-to-quantization-noise-ratio (SQNR) loss because of over-ranging [11], [12], [13].

This article presents a 2-0 MASH structure consisting of a second-order $\Delta\Sigma$ ADC and a 3-bit SAR ADC. Compared to the previous low distortion 2-0 MASH structure [8], this work implements the input feedforward by reusing the 3-bit SAR to perform a coarse conversion. Thus, the second-order $\Delta\Sigma$ ADC only processes quantization errors like zoom ADCs. Since the 3-bit SAR ADC further converts the enlarged quantization error of the $\Delta\Sigma$ ADC caused by over-ranging, the quantization error of the structure is determined by the backend SAR ADC. Therefore, the SQNR loss is prevented.

The mismatch between the analog transfer function and the digital noise cancellation filter (DNCF) causes noise leakage due to the finite gain effect [9]. Conventional operational transconductance amplifiers (OTAs) can achieve high gain at the cost of compensation, static currents, extra biasing, and common-mode feedback (CMFB) circuits. Floating inverter amplifiers (FIAs) are better candidates for their simplicity, robustness, and avoidance of CMFB circuits [14], but they suffer from low gain. Recent works boost the gain of FIA by the following methods: Tang *et al.* [15] cascades two FIAs, achieving 33-dB gain; Tang *et al.* [16] cascades two FIAs and a cascode FIA together, achieving over 80-dB gain; Matsuoka *et al.* [17] cascades an FIA and a cascode FIA, achieving over 70-dB gain; single-stage cascode FIA in [18] achieves over 50-dB gain and Zhao *et al.* [3] proposed a swing-enhanced FIA, achieving over 50-dB gain. However, cascading multistage FIAs will magnify the input-referred noise, while embedding cascodes will reduce the output swing.

Thanks to the correlated level shifting (CLS) technique [19], [21], this article presents an FIA with dynamic body-biasing (DBB)-assisted CLS, which can achieve over 60-dB dc gain with only a single-stage FIA.

This article is organized as follows. Section II provides a description and analysis of the proposed structure. Section III introduces the FIA with DBB-assisted CLS and discusses the amplifier's performance. Section IV shows the circuit implementation of the ADC and its timing diagram. Section V provides measurement results and makes a comparison with the state-of-the-art ADCs. Finally, the conclusion is presented in Section VI.

Manuscript received 16 June 2022; revised 8 August 2022; accepted 13 September 2022. Date of publication 5 October 2022; date of current version 26 May 2023. This article was approved by Associate Editor Shanthi Pavan. This work was supported in part by the National Key Research and Development Program of China under Grant 2020YFB2206002 and in part by the National Natural Science Foundation of China (NSFC) under Grant 92164301. *(Corresponding author: Zhichao Tan.)*

Lingxin Meng, Yaopeng Hu, Yibo Zhao, Menglian Zhao, and Zhichao Tan are with the College of Information and Electronics Engineering, Zhejiang University, Hangzhou 310063, China (e-mail: zhichaotan@zju.edu.cn).

Wanyuan Qu is with the School of Micro-Nano Electronics, Zhejiang University, Hangzhou 310063, China.

Le Ye is with the Advanced Institute of Information Technology, Peking University, Beijing 100871, China.

Color versions of one or more figures in this article are available at https://doi.org/10.1109/JSSC.2022.3208144.

Digital Object Identifier 10.1109/JSSC.2022.3208144

0018-9200 © 2022 IEEE. Personal use is permitted, but republication/redistribution requires IEEE permission.
See https://www.ieee.org/publications/rights/index.html for more information.

Authorized licensed use limited to: Zhejiang University. Downloaded on March 22,2026 at 11:19:36 UTC from IEEE Xplore. Restrictions apply.

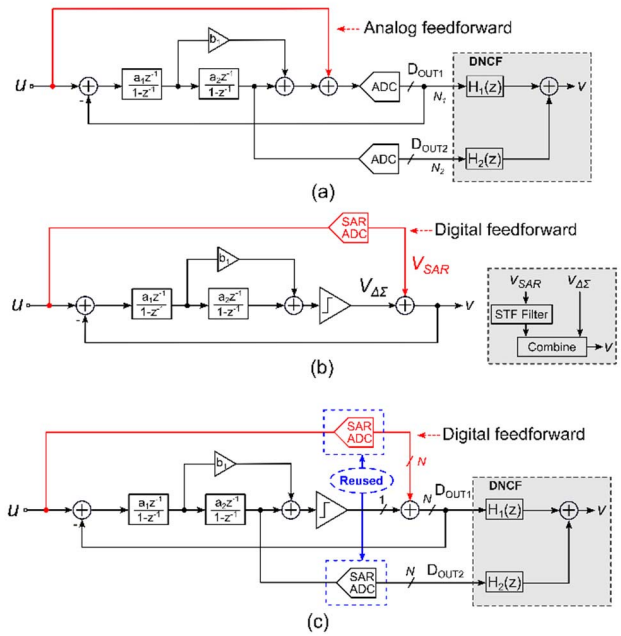

Fig. 1. (a) MASH structure with analog feedforward. (b) Redrawn zoom structure. (c) Proposed MASH structure with digital feedforward.

II. System-Level Analysis

The feedforward branch is always adopted as a signal component branch in loop filters, which ensures that the outputs of the integrators are only composed of shaped quantization errors to improve linearity. Meanwhile, this characteristic also enables another stage of ADC to be cascaded after the loop filter to form a MASH structure, improving SQNR performance.

The feedforward branch is usually implemented by an analog adder like Fig. 1(a), while zoom ADCs provide another view to implement feedforward, as shown in Fig. 1(b). The input of the $\Delta\Sigma$ loop filter is just the quantization error of the SAR ADC, while the signal component is provided by the SAR ADC in the digital domain.

Based on these two conditions above, it is found that we can use a simple SAR ADC reused both as the coarse SAR ADC as the digital feedforward branch and as the backend stage of a 2-0 MASH structure, as shown in Fig. 1(c). The proposed structure consists of a second-order CIFF first stage and an SAR ADC as a zeroth-order backend stage. The asynchronous SAR ADC is reused as the digital feedforward branch of the first stage DSM and the second stage by time multiplexing. Thus, the first stage operates as a dynamic zoom ADC. The digital outputs of these two stages are processed by a DNCF. After DNCF, the output contains both the signal component and the second-order shaped quantization noise of the SAR ADC. Appling the coefficients $a_1 = 1$, $b_1 = 2$, $a_2 = 1$ and the DNCF $H_1(z) = z^{-2}$, $H_2(z) = (1 - z^{-1})^2$, the transfer function of the system is shown as in

$$V(z) = z^{-2}U(z) + (1 - z^{-1})^2 E_{\mathrm{SAR}}(z) \tag{1}$$

where E_{SAR} is the quantization error of the SAR ADC.

Two problems will occur in the zoom structure shown in Fig. 1(b): 1) SQNR loss caused by the over-ranging of the reference voltage of the loop filter and 2) nonunity STF $2z^{-1} - z^{-2}$ without post-signal processing. The latter problem is mitigated by an extra STF filter [12] or an additional feedforward branch [20]. From (1), it is found that these two problems will be together solved by the proposed structure thanks to MASH and DNCF. Compared to the structure in Fig. 1(a), from the system-level view, the transfer functions of the two structures are the same. But since the resolutions of the two ADCs in Fig. 1(a) are always different in most cases and the timing requirements of the quantizer inside the loop filter are more stringent than that of the quantizer out of the loop, it is less easy to reuse the quantizers by one low-power quantizer in Fig. 1(a).

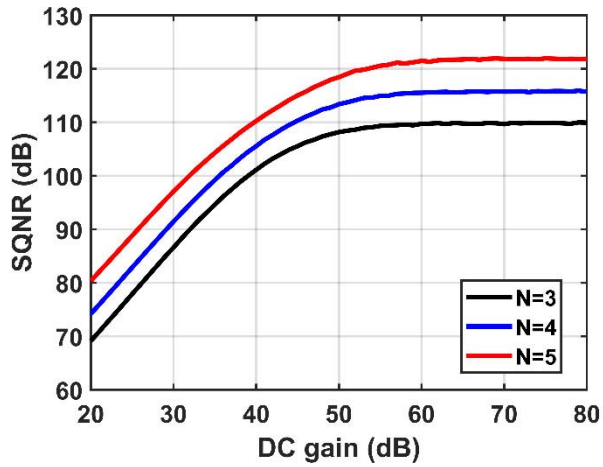

Fig. 2. SQNR versus finite integrator dc gain and SAR ADC resolution.

Integrators are the most critical parts in the system implementation, whose swings are supposed to be designed to reasonable values. One way is to adjust the coefficients of the loop filter. A more comfortable output swing range can be obtained by setting $a_1 = 0.5$, $b_1 = 1$, and $a_2 = 0.5$. Passive multiplication can recover signal scaling right after the second integrator. The other way is to adjust the resolution N of the SAR ADC. Increasing the resolution of the SAR ADC can also reduce the swings of the integrators but at the cost of exponentially increased digital power and mismatch error correction logic complexity. Furthermore, similar to [12], the trade-off between input signal frequency and the SAR ADC resolution should be considered. But it has to be noted that the SAR ADC is also reused as the MASH backend stage, which determines the quantization error of the total system. With the scaled coefficients equipped second order DSM and the over-ranging factor $M = 1$, the resolution of the SAR ADC $N = 3$ is an optimal choice.

Finite integrator dc gain would affect the noise transfer function of the loop filter. In MASH structures, noise leakage will also occur if there is a mismatch between the loop filter and the DNCF due to inadequate integrator dc gain. As shown in Fig. 2, over 60-dB dc gain will not deteriorate the SQNR of the system.

System-level simulation reveals that a 108-dB SQNR is realized at an OSR of 125 under a -3 dBFS, 0.4-kHz input. To design a thermal noise-limited 16-bit ADC, the SQNR is

Authorized licensed use limited to: Zhejiang University. Downloaded on March 22,2026 at 11:19:36 UTC from IEEE Xplore. Restrictions apply.

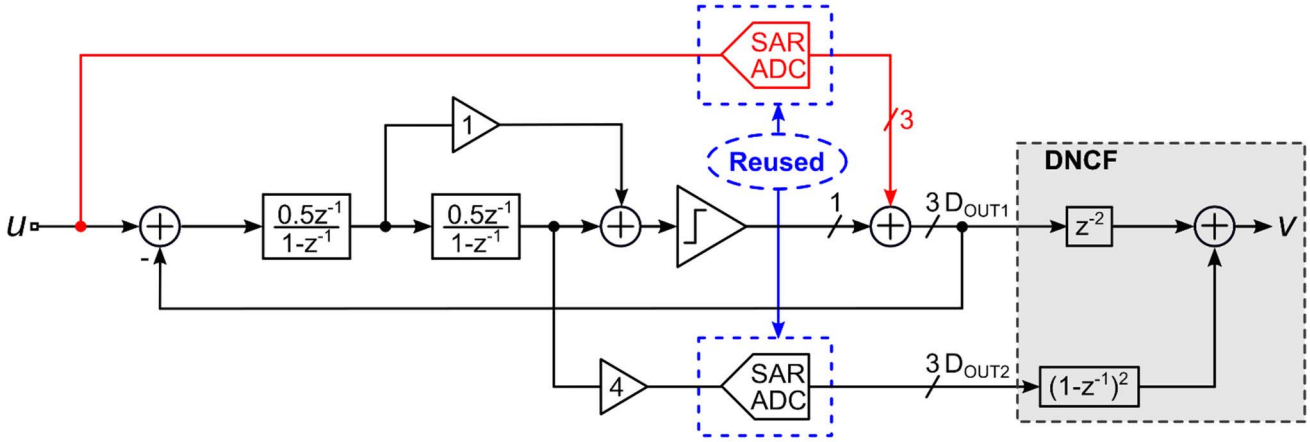

Fig. 3. Detailed system block diagram.

qualified for the specification. The detailed system block is proposed in Fig. 3.

III. FIA With DBB Assisted CLS

Due to several advantages, FIA is considered a promising dynamic amplifier (DA) adopted in discrete-time (DT) DSM. Although FIA is suitable for differential circuits thanks to its common-mode stability, the dc gain of a single-stage FIA is not enough for the proposed MASH structure with DNCF since the DNCF performance strongly depends on the integrator dc gain.

CLS is generally used in SC circuits to reduce the error caused by finite integrator gain at the cost of another load capacitor C_{CLS} and another operation phase φ_{22}, which can be easily squeezed in the low-speed designs. According to system-level simulation, the first integrator still requires a normalized output swing of 0.4, even with a scaled set of coefficients. And CLS technique can also effectively enlarge the output swing of the integrator, which would help meet the requirements for the integrators. DBB is adopted to avoid using another battery capacitor during the added CLS working phase.

Appling the CLS technique with the assistance of DBB, the effective gain of the FIA boosts from 43.6 to 62.4 dB, whose −3-dB normalized output swing is 0.49. Compared to other gain-boosting techniques, the cost of the proposed FIA is lower, which are only a pair of switches and another amplification phase. At the same time, it avoids the drawbacks caused by multistages or cascodes. Furthermore, the PVT variation and common-mode characteristics of the proposed FIA are also discussed.

A. CLS Overview

Generally, the operation of CLS can be implemented in three phases: sampling (φ_1), estimation (φ_{21}), and level shifting (φ_{22}), as shown in Fig. 4.

During φ_1, the signal to be integrated is sampled on C_1, while C_{L} and C_{CLS} are reset to V_{CM}. During φ_{21}, a coarse

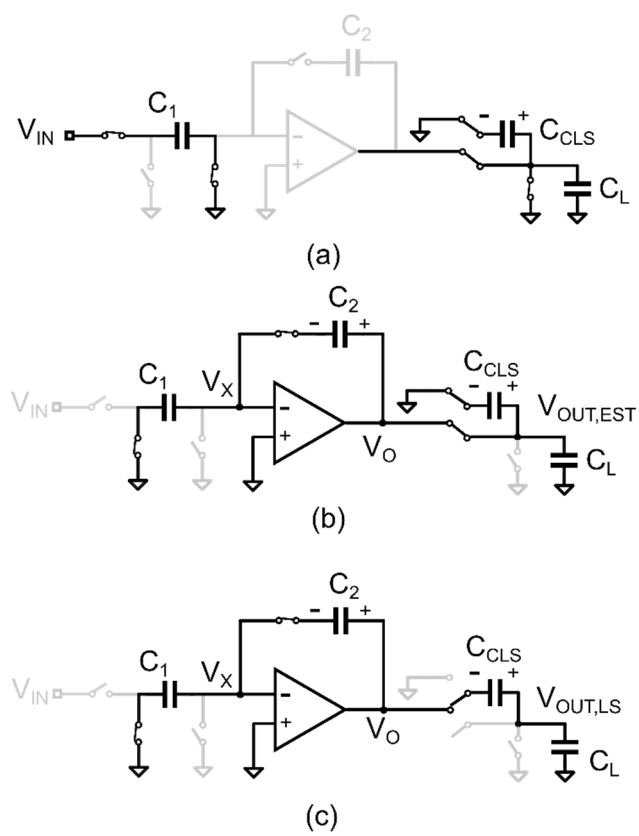

Fig. 4. CLS operation diagram. (a) Sampling φ_1. (b) Estimation φ_{21}. (c) Level-shifting φ_2.

amplification is performed, and the output voltage of the amplifier as well as the integration output $V_{\mathrm{OUT,EST}}$ gets as in [22]

$$\frac{V_{\mathrm{OUT,EST}}}{V_{\mathrm{IN}}} = \frac{C_1/C_2}{\left(1+\frac{1}{A}\right)\left(1+\frac{C_1/C_2}{A+1}\right)} \tag{2}$$

and $V_{\mathrm{OUT,EST}}$ is stored in C_{L}, C_{CLS}, where A is the dc gain. During φ_{22}, the amplifier's load changes from C_{L} in parallel

Authorized licensed use limited to: Zhejiang University. Downloaded on March 22,2026 at 11:19:36 UTC from IEEE Xplore. Restrictions apply.

with C_{CLS} to C_L in series with C_{CLS}, as shown in Fig. 5(c). The inserted C_{CLS} makes the output of the amplifier close to V_{CM}, thus bringing the following two benefits. One is the boosted effective dc gain. The finite gain effect is that the integrator could not provide a complete charge transfer from C_1 to C_2. Due to the transient characteristic of the amplifier, the voltage at the inverting virtual ground point V_X is always constrained by

$$V_X = -V_O/A \tag{3}$$

where V_O is the output voltage of the amplifier. One can make the charge transfer complete by reducing the voltage V_O as small as possible instead of directly increasing gain A. During φ_{22}, the integration voltage is not provided directly by the amplifier output, thanks to C_{CLS}. The voltage at the virtual ground point of the amplifier at present is

$$V_X \approx -\frac{V_{OUT,LS} - V_{OUT,EST}}{A} \tag{4}$$

where $V_{OUT,LS}$ is the voltage stored in C_L at the end of φ_{22}. V_X now is much smaller than that at the end of φ_{21}.Thus, the voltage at the input of the amplifier is forced to reduce, and the charge on $C_1$is further transferred to C_2, improving effective dc gain.

The other benefit is the increased output swing because the integrator output is no longer connected directly to the transistors but to the inserted C_{CLS}. The amplifier's output stage is not so easy to enter the triode region, thus enlarging the output swing.

B. FIAs With DBB Assisted CLS Operation

Embedding CLS in SC circuits divides the integration phase into estimation and level shifting. The reservoir capacitor C_{RES} supplies the FIA, whose storage charge flows with the amplification time. Near the end of the amplification phase, the transconductance of the FIA becomes smaller due to the weaker power supply. When shifting to φ_{22}, the FIA has already stopped operating. Therefore, CLS cannot be combined with FIAs roughly without any modification.

One can use the proposed DBB technique to help CLS combine with FIAs properly at the cost of only pairs of switches. The main working principle of DBB is making use of the body effect. Shifting the transistor's body biasing voltage between the ground and its source terminal will influence the threshold voltage V_{TH} of the transistors. The FIA will gradually shut down when the voltage across C_{RES} is smaller than the sum of the V_{TH} of the transistors. By reducing V_{TH} with shorting the source and body of the transistors, they can operate in the weak inversion region again in φ_{22} to realize the level shifting.

The detailed operation is shown in Fig. 5. During the sampling phase φ_1, the input signal is sampled, C_{RES} is charging, and C_{CLS} and C_L are reset to V_{CM}. During the estimation phase φ_{21}, a coarse amplification is performed to get $V_{OUT,EST}$, which is stored in C_{CLS} and C_L. C_{RES} is connected to the sources of the transistors. All bodies of PMOS transistors are connected to V_{DD}, while the NMOS transistors are connected to GND.

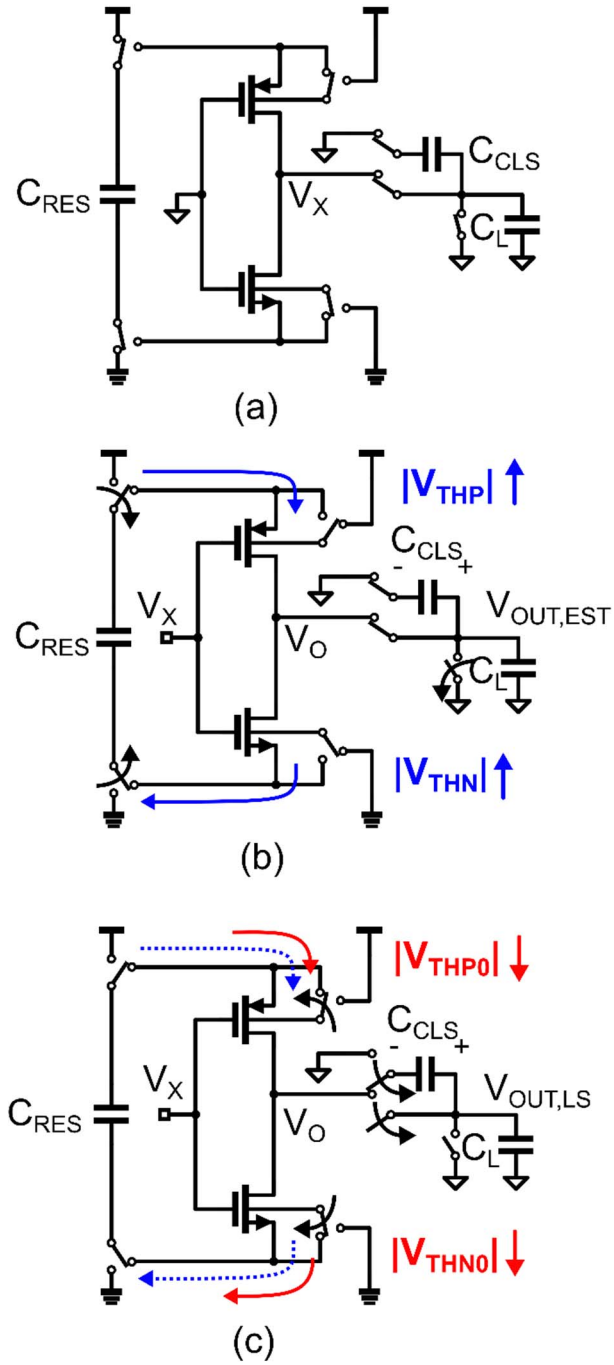

Fig. 5. DBB-assisted CLS operation diagram. (a) Sampling φ_1. (b) Estimation φ_{21}. (c) Level-shifting φ_2.

Due to the body effect, the threshold voltage of the transistors is (take NMOS as an example)

$$V_{TH} = V_{TH0} + \gamma\left(\sqrt{2\Phi_F + V_{SB}} - \sqrt{2\Phi_F}\right) \tag{5}$$

where V_{TH0}, Φ_F and γ are related to the intrinsic properties of transistors, V_{SB} is the voltage difference between the source and the transistor body. At the end of this phase, the voltage across C_{RES} is lower than the sum $V_{THN} + |V_{THP}|$. At the start of the level shifting phase φ_{22}, C_{CLS} is connected in series with

Authorized licensed use limited to: Zhejiang University. Downloaded on March 22,2026 at 11:19:36 UTC from IEEE Xplore. Restrictions apply.

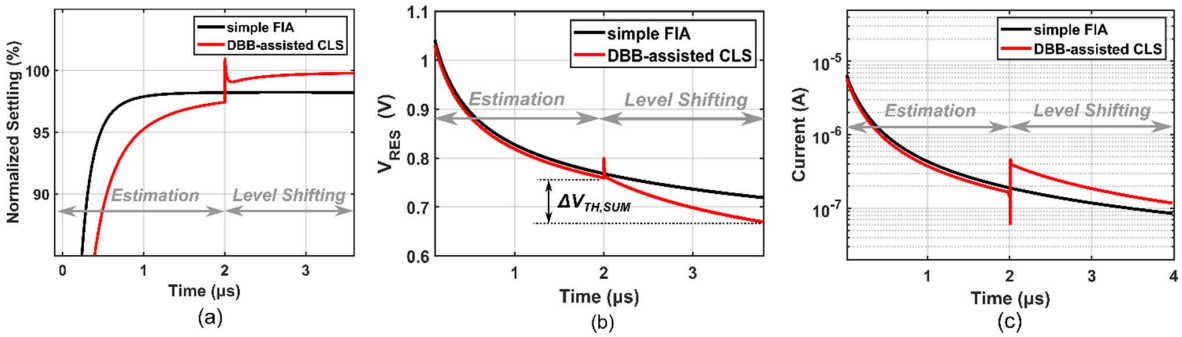

Fig. 6. Comparison of transient behaviors of simple FIA- and DBB-assisted CLS. (a) Normalized settling behavior. (b) Voltage across C_{RES}. (c) Current floating out of C_{RES}.

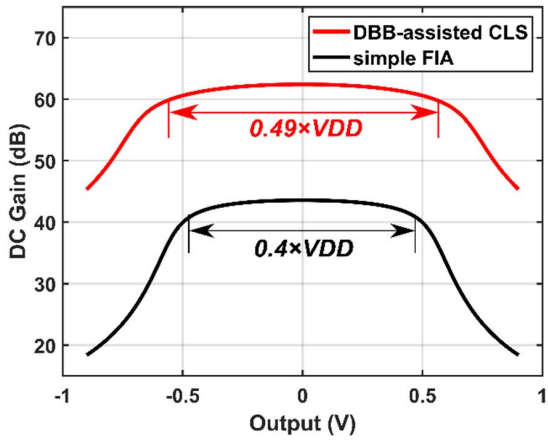

Fig. 7. Simulated dc gain and swing versus output voltage.

C_L, as shown in Fig. 5(c), and all bodies of the transistors are connected to their sources. Therefore, the threshold voltages are V_{THN0} and V_{THP0}, which are smaller than V_{THN} and V_{THP}. Now C_{RES} would continue to charge the FIA until the voltage across C_{RES} drops below $V_{THN0} + |V_{THP0}|$. Since the level shifting only transfers a small amount of charge, the voltage difference $\Delta V_{TH,SUM}$ induced by DBB is enough.

The simulated transient behavior of the output voltage of the integrator V_{OUT} settling, the voltage across C_{RES}, and the current floating out from C_{RES} are shown in Fig. 6, where a simple FIA and the proposed DBB-assisted FIA are compared. C_{RES}, C_S, C_{INT}, C_L, C_{CLS} are chosen to 2.2 pF, 1 pF, 1 pF, 310 fF, 440 fF, respectively, in the test circuits. During estimation phase φ_{21}, the discharge process of the proposed FIA and the simple FIA is nearly the same. However, settling simple FIA is much faster during estimation because C_{CLS} becomes an extra load of the FIA in DBB-assisted CLS. During the level shifting phase φ_{22}, all transistors' bodies connect to their sources. The voltage across C_{RES} is $V_{THN} + |V_{THP}|$ at the end of φ_{21}, which is supposed to continue to fall to $V_{THN0} + |V_{THP0}|$. Thus, level shifting takes place during this period of discharging. As shown in Fig. 6(a), a more accurate settling can be achieved. Since the current floating out from C_{RES} shows the power consumption of the FIA, as shown in Fig. 6(c) (log-scale vertical axis for demonstration), the extra level shifting CLS only consumes a small amount of power compared to the total amplification process.

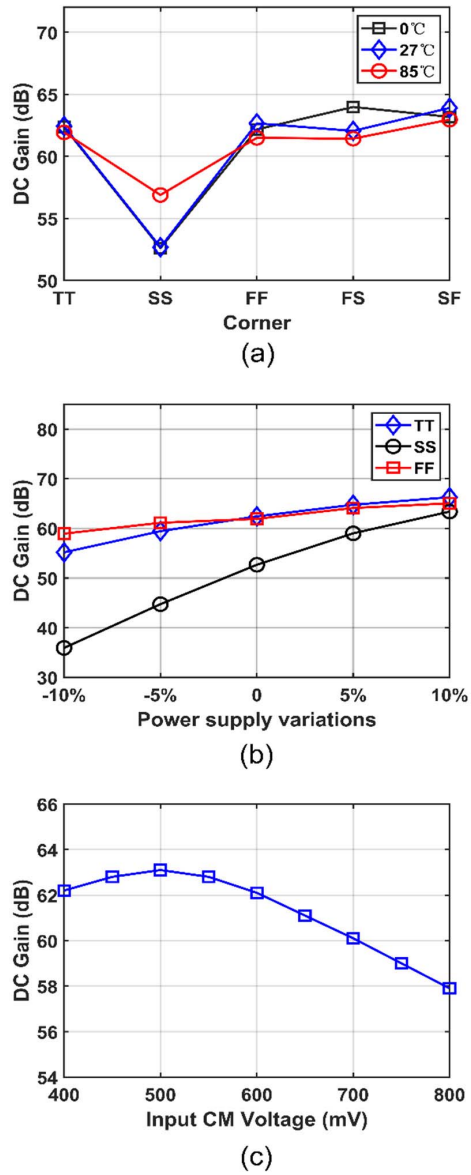

Fig. 8. DC gain under PVT and input CM variation of proposed FIA. (a) Corners and temperature variation. (b) Corners and power supply variation. (c) Input CM variation.

C. Gain and Swing

As shown in Fig. 7, simulation results reveal that the dc gain is boosted from 43.6 to 62.4 dB with the DBB-assisted CLS

Authorized licensed use limited to: Zhejiang University. Downloaded on March 22,2026 at 11:19:36 UTC from IEEE Xplore. Restrictions apply.

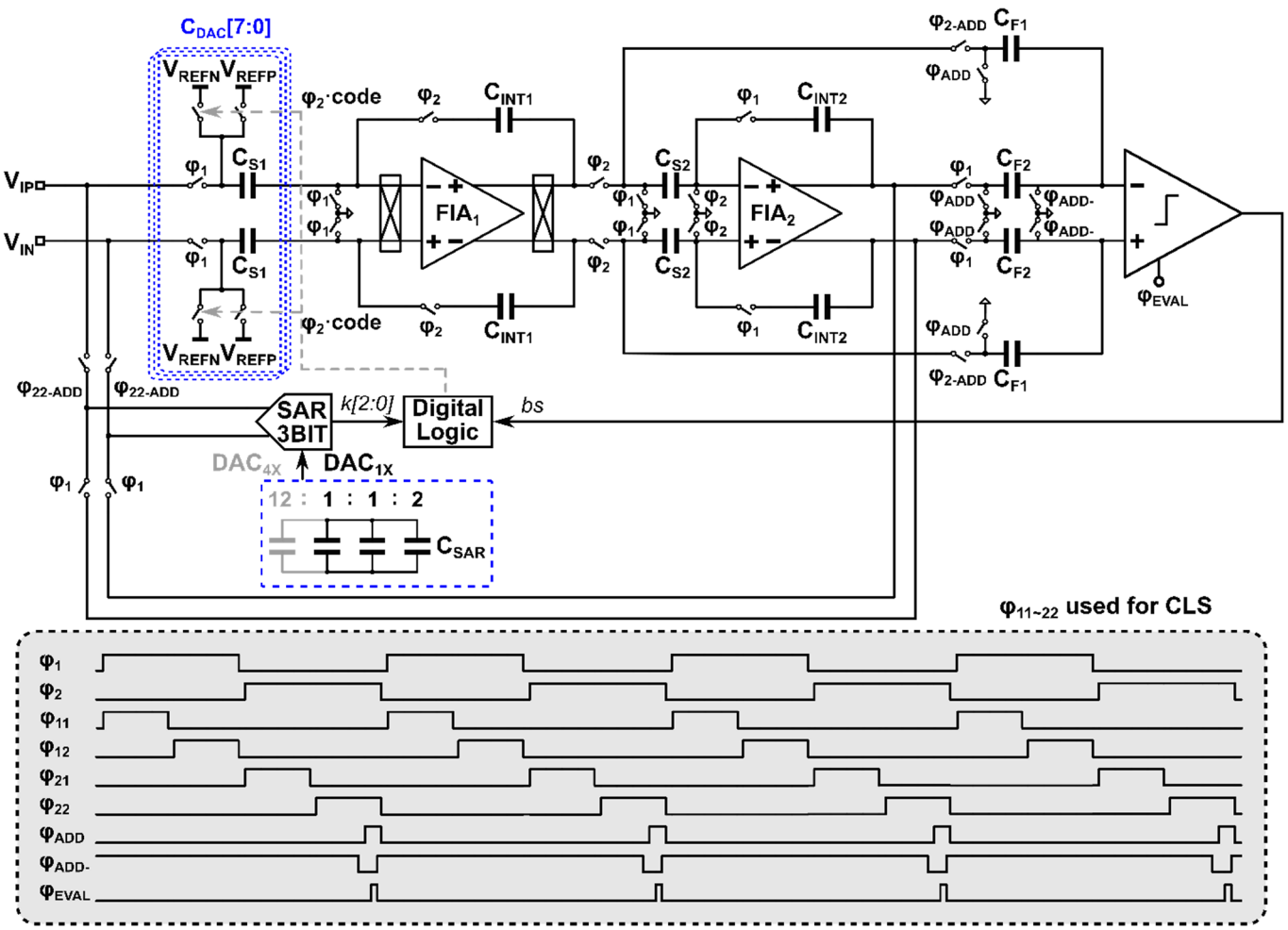

Fig. 9. Circuit implementation of the ADC and its timing diagram.

compared to simple FIA. And the output swing is enlarged from about ±480 mV (normalized 0.4 × V_{DD}) to about ±590 mV (normalized to 0.49 × V_{DD}). As mentioned in Section II, the DA is qualified in the proposed MASH structure to achieve 108 dB SQNR.

The CLS technique in SC circuits in previous works [19], [21] helps increase the dc gain to its square value. However, boosting effect is weakened because there is no static, constant, strong supply in DBB during level shifting.

It should also be noted that the swing here is not enhanced like [21] to 80% of the full scale. Although the coupling between the FIA output voltage V_O and the integrator output voltage $V_{OUT,LS}$ has been broken, the transistors would still shut down due to poor V_{GS} caused by C_{RES} discharge, thus limiting the increase of the output swing.

D. PVT Variation and CM Stability

The dc gains across different corners and temperatures and power supply variations are shown in Fig. 8(a) and (b). The simulation conditions are the same as that in Section III-C. DC gains will drop dramatically under SS corners and lower power supply conditions. The working principle of FIA is to charge the loading capacitor through a current-reused G_m. FIAs will start shutting down when the voltage across C_{RES} is less than $V_{THN} + |V_{THP}|$, which is vulnerable under different PVT conditions. SS corner will increase V_{THN} and $|V_{THP}|$, while low supply voltage will decrease the initial voltage across C_{RES}. These lead to incomplete settling during integration, thus, deteriorating the dc gain. We can mitigate the problem by adjusting the capacitance of C_{RES}. Simulation results show that by enlarging the capacitor C_{RES} to about 1.5× larger under SS, 1.2 V and TT, −10% VDD, the dc gain of the proposed FIA can achieve the same gain as that under TT corner, 1.2-V supply. But when at SS, −10% VDD, even about double C_{RES} cannot recover the dc gain at this speed.

The dc gains across input common-mode voltage of the integrator from 400 to 800 mV are also presented in Fig. 8(c). Post-layout simulation shows that the gain variation is within 6 dB, exhibiting good common-mode stability.

IV. Circuit Implementation

A. Reused SAR ADC

A 3-bit asynchronous SAR ADC is implemented here for coarse quantization during φ_{22-ADD} and a zeroth-order backend stage in φ_1 as shown in Fig. 10. Since the strict precision requirement is proposed for the $\Delta\Sigma$ stage, the design

Authorized licensed use limited to: Zhejiang University. Downloaded on March 22,2026 at 11:19:36 UTC from IEEE Xplore. Restrictions apply.

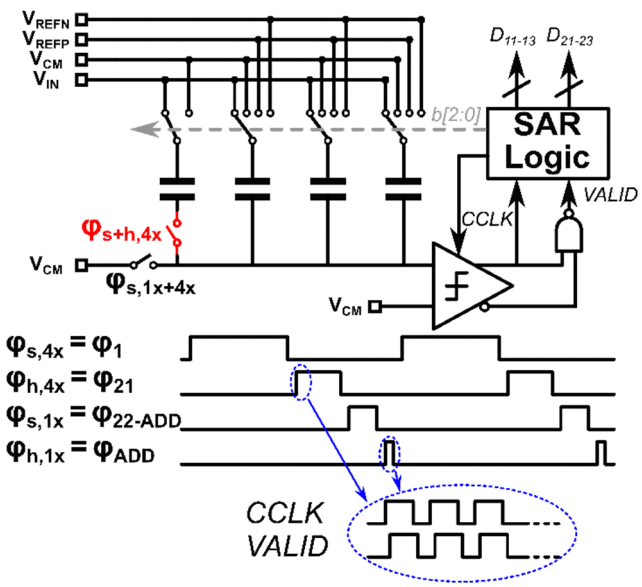

Fig. 10. Asynchronous SAR implementation.

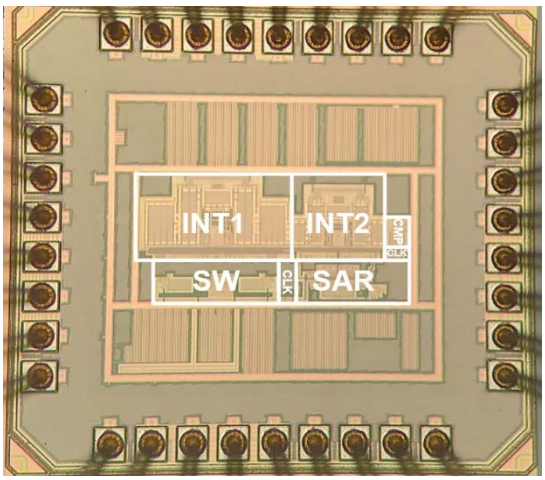

Fig. 11. Chip micrograph.

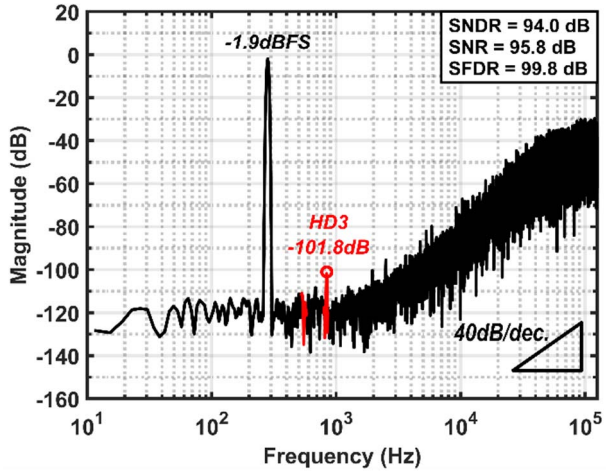

Fig. 12. Measured ADC output spectrum (2^{16} pts).

for the SAR ADC is quite relaxing. The SAR CDAC consists of four-element capacitors to perform a 3-bit conversion, and the unit capacitor is sized 9.5 fF to ensure that the error caused by noise and mismatch is less than 1 $V_{\mathrm{LSB,SAR}}$. And it would be in parallel with an attenuation capacitor (12×) to provide a passive gain of 4 in φ_1 to recover the signal scaling caused by the scaled coefficients. The dynamic comparator in the SAR ADC is similar to [23].

B. ΔΣ Modulator

As shown in Fig. 9, a second-order single-bit modulator is formed. To meet the SNR requirements of 16-bit, the capacitors for sampling are about 0.88 pF, which is reused as the feedback CDAC (110 fF each). With the scaled coefficients, the integration capacitors of the first stage C_{INT1} are 1.76 pF. C_{S2} and C_{INT2} are set to 220 and 440 fF in the second stage. A chopper is inserted to remove the flicker noise and offsets, which switches during φ_1 when the first integrator is idle. The amplifiers here are the proposed FIAs with the DBB-assisted CLS technique. DWA mitigates the mismatch of the 3-bit feedback CDAC. A passive adder composed of $C_{\mathrm{F1}} = 53$ fF and $C_{\mathrm{F2}} = 53$ fF combines the results of the two integrators and outputs the sum to the dynamic comparator. Since the results of the first integrator and the second integrator are available at the end of $\varphi_{2-\mathrm{ADD}}$ and φ_1, respectively, the summation starts at φ_{ADD} and finishes before φ_{EVAL} comes. Furthermore, the subphase φ_{11}, φ_{12}, φ_{21}, and φ_{22} is divided to perform CLS for the FIAs. As previously discussed, the proposed FIA, whose dc gain is 62.4 dB, is enough for the system.

C. Combining Logic

The combination of the 1-bit ΔΣ output and the 3-bit SAR ADC output is realized by digital logic. Like [12], the over-ranging factor $M = 1$ is adopted to tolerate the error caused by signal variation and SAR conversion. The combined result is 3-bit, which would control the CDAC after DWA in φ_2. The logic circuits are all implemented by high V_{TH} transistors to save power.

V. Measurement Results

The prototype 2-0 MASH ADC is fabricated in a 55-nm CMOS process and occupies an active area of 0.136 mm^2, as shown in Fig. 11. The reuse of SAR saves about 10% of the total area. The DNCF is realized off-chip.

Testing with a −1.9-dBFS 278.5-Hz input signal, the measured peak SNDR, SNR, and SFDR over a 1-kHz bandwidth is 94.0, 95.8, and 99.8 dB with chopper and DWA ON. A second-order-shaped noise floor with a 40-dB per decade slope is evident in the spectrum of Fig. 12.

SNDR/SNR across input amplitude is also presented in Fig. 13, revealing a DR of 96.9 dB. The power breakdown is shown in Fig. 14. The ADC draws a 2.39-μA current from a 1.2-V supply under a 250-kS/s sampling rate. The analog part (capacitors, comparators) consumes 62.6% of the power while the digital part (DWA, SAR logic, and the clock generator) and the reference part (feedback CDAC) consume 29.4% and 8.0% of the total power, respectively.

Authorized licensed use limited to: Zhejiang University. Downloaded on March 22,2026 at 11:19:36 UTC from IEEE Xplore. Restrictions apply.

TABLE I
PERFORMANCE SUMMARY AND COMPARISON

	ISSCC-18 H.Chandrakumar	ISSCC-19 M.Konijnenburg	ISSCC-16 Y.Shu	ISSCC-21 K. Choo	ISSCC-21 C. Pochet	ISSCC-21 J. Huang	This work
Architecture	SDCT	NS-SAR	NS-SAR	SAR	VCO	VCO	**SDDT**
Process [nm]	40	55	55	180	65	65	**55**
Fully Dynamic	No	No	No	Yes	No	No	**Yes**
Fs [kHz]	400	32	1000	6	200	64	**250**
OSR	40	107	125	1	100	64	**125**
BW [kHz]	5	0.15	4	3	1	0.5	**1**
Supply [V]	1.2	1.3/0.9	1.2	1	1.2/0.8	0.8	**1.2**
Power [μW]	4.5	0.9	15.7	0.468	5.8	1.68	**2.87**
SNDR [dB]	93.5	78.8	96.1	86.9	92.3	94.2	**94.0**
DR [dB]	96.5	NA	NA	NA	92.3	95.1	**96.9**
***FoM$_{SNDR}$ [dB]**	184.0	161.1	180.0	184.9	174.7	178.9	**179.4**
****FoM$_{DR}$ [dB]**	187.0	NA	NA	NA	174.7	179.8	**182.3**

* $FoM_{SNDR} = SNDR + 10lg(BW/Power)$ ** $FoM_{DR} = DR + 10lg(BW/Power)$

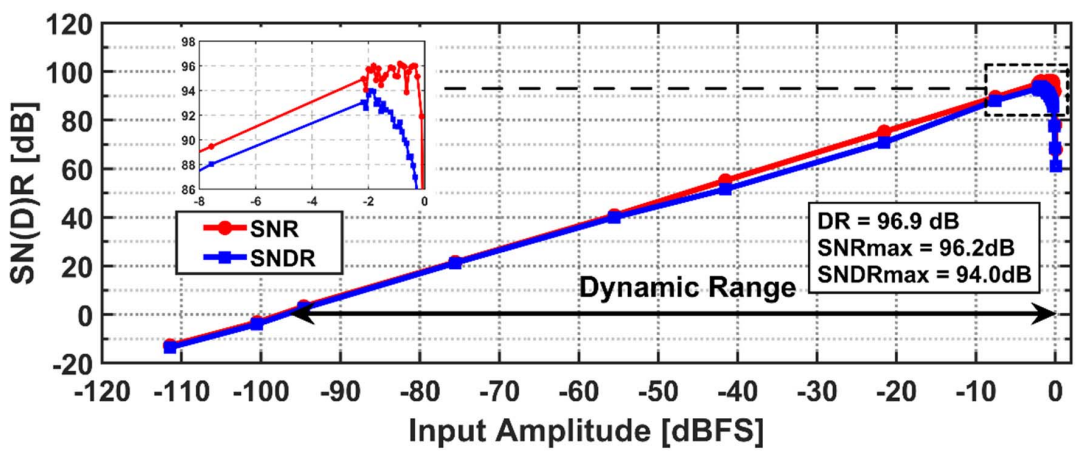

Fig. 13. Measured DR performance.

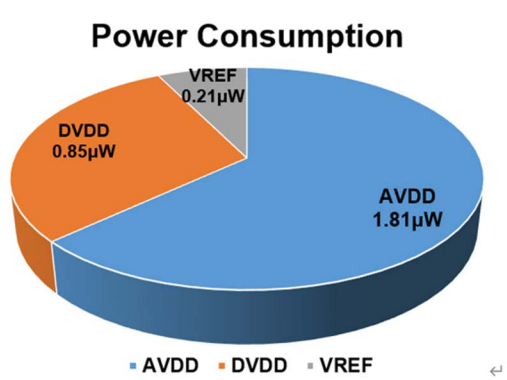

Fig. 14. Measured power consumption breakdown.

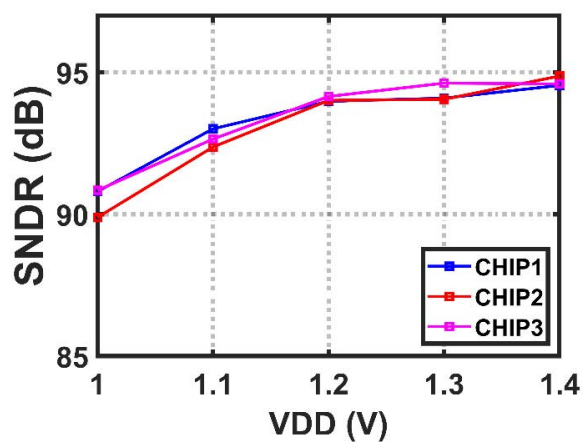

Fig. 15. Measured chip performance versus power supply.

Measured three different devices, the SNDR versus power supply and their corresponding power is shown in Fig. 15. It shows the robustness of the process without any calibration and SNDR variation within 3 dB over ±10% of the power supply. The SNDR drop was probably caused by inefficient dc gain of the integrators, as previously discussed in Section IV-D.

Authorized licensed use limited to: Zhejiang University. Downloaded on March 22,2026 at 11:19:36 UTC from IEEE Xplore. Restrictions apply.

Table I summarizes and compares the performance of the 2-0 MASH ADC with the state-of-the-art micro-power high-resolution ADCs. The presented ADC achieves a FoM_{SNDR} of 179.4 dB and a FoM_{DR} of 182.3 dB.

VI. Conclusion

This article presents a fully dynamic, energy-efficient 94.0-dB SNDR and 96.9-dB DR MASH ADC. Combining the digital feedforward zoom structure and the low-distortion MASH structure relaxes the design for the reused SAR ADC and the loop filter. The single-stage FIA with DBB-assisted CLS is proposed, achieving 26-dB dc gain boosting at the cost of switches and an insignificant amount of power. Embedded with the proposed FIA in the structure, the ADC only consumes 2.87 μW under a 1.2-V supply.

References

[1] Y. Chae and G. Han, "Low voltage, low power, inverter-based switched-capacitor delta-sigma modulator," *IEEE J. Solid-State Circuits*, vol. 44, no. 2, pp. 458–472, Feb. 2009, doi: 10.1109/JSSC.2008.2010973.

[2] H. Luo, Y. Han, R. C. C. Cheung, X. Liu, and T. Cao, "A 0.8-V 230-μW 98-dB DR inverter-based $\Sigma\Delta$ modulator for audio applications," *IEEE J. Solid-State Circuits*, vol. 48, no. 10, pp. 2430–2441, Oct. 2013, doi: 10.1109/JSSC.2013.2275659.

[3] M. Zhao *et al.*, "A 4-μW bandwidth/power scalable delta–sigma modulator based on swing-enhanced floating inverter amplifiers," *IEEE J. Solid-State Circuits*, vol. 57, no. 3, pp. 709–718, Mar. 2022, doi: 10.1109/JSSC.2021.3123261.

[4] H. Zhang *et al.*, "A 6 μW 95 dB SNDR inverter based $\Sigma\Delta$ modulator with subtractive dithering and SAR quantizer," *IEEE Trans. Circuits Syst. II, Exp. Briefs*, vol. 66, no. 4, pp. 552–556, Apr. 2019, doi: 10.1109/TCSII.2018.2869103.

[5] J. Liu, D. Li, Y. Zhong, X. Tang, and N. Sun, "A 250 kHz-BW 93 dB-SNDR 4th-order noise-shaping SAR using capacitor stacking and dynamic buffering," in *IEEE Int. Solid-State Circuits Conf. (ISSCC) Dig. Tech. Papers*, Feb. 2021, pp. 369–371, doi: 10.1109/ISSCC42613.2021.9366008.

[6] J. Liu *et al.*, "A 90-dB-SNDR calibration-free fully passive noise-shaping SAR ADC with 4× passive gain and second-order DAC mismatch error shaping," *IEEE J. Solid-State Circuits*, vol. 56, no. 11, pp. 3412–3423, Nov. 2021, doi: 10.1109/JSSC.2021.3087661.

[7] T. Wang, T. Xie, Z. Liu, and S. Li, "An 84 dB-SNDR low-OSR 4th-order noise-shaping SAR with an FIA-assisted EF-CRFF structure and noise-mitigated push-pull buffer-in-loop technique," in *IEEE Int. Solid-State Circuits Conf. (ISSCC) Dig. Tech. Papers*, Feb. 2022, pp. 418–420, doi: 10.1109/ISSCC42614.2022.9731771.

[8] J. Silva, U.-K. Moon, and G. C. Temes, "Low-distortion delta-sigma topologies for MASH architectures," in *Proc. IEEE Int. Symp. Circuits Syst. (ISCAS)*, May 2004, p. 1144, doi: 10.1109/ISCAS.2004.1328402.

[9] G. Cauwenberghs and G. C. Temes, "Adaptive digital correction of analog errors in MASH ADCs. I. Off-line and blind on-line calibration," *IEEE Trans. Circuits Syst. II, Analog Digit. Signal Process.*, vol. 47, no. 7, pp. 621–628, Jul. 2000, doi: 10.1109/82.850421.

[10] P. Kiss *et al.*, "Adaptive digital correction of analog errors in MASH ADCs. II. Correction using test-signal injection," *IEEE Trans. Circuits Syst. II, Analog Digit. Signal Process.*, vol. 47, no. 7, pp. 629–638, Jul. 2000, doi: 10.1109/82.850422.

[11] B. Gonen, F. Sebastiano, R. van Veldhoven, and K. A. A. Makinwa, "A 1.65 mW 0.16 mm^2 dynamic zoom-ADC with 107.5 dB DR in 20 kHz BW," in *IEEE Int. Solid-State Circuits Conf. (ISSCC) Dig. Tech. Papers*, Jan. 2016, pp. 282–283, doi: 10.1109/ISSCC.2016.7418017.

[12] S. Karmakar, B. Gönen, F. Sebastiano, R. van Veldhoven, and K. A. A. Makinwa, "A 280 μW dynamic zoom ADC with 120 dB DR and 118 dB SNDR in 1 kHz BW," *IEEE J. Solid-State Circuits*, vol. 53, no. 12, pp. 3497–3507, Dec. 2018, doi: 10.1109/JSSC.2018.2865466.

[13] B. Gönen, F. Sebastiano, R. Quan, R. van Veldhoven, and K. A. A. Makinwa, "A dynamic zoom ADC with 109-dB DR for audio applications," *IEEE J. Solid-State Circuits*, vol. 52, no. 6, pp. 1542–1550, Jun. 2017, doi: 10.1109/JSSC.2017.2669022.

[14] X. Tang *et al.*, "An energy-efficient comparator with dynamic floating inverter amplifier," *IEEE J. Solid-State Circuits*, vol. 55, no. 4, pp. 1011–1022, Apr. 2020, doi: 10.1109/JSSC.2019.2960485.

[15] X. Tang *et al.*, "A 13.5-ENOB, 107-μW noise-shaping SAR ADC with PVT-robust closed-loop dynamic amplifier," *IEEE J. Solid-State Circuits*, vol. 55, no. 12, pp. 3248–3259, Dec. 2020, doi: 10.1109/JSSC.2020.3020194.

[16] X. Tang, X. Yang, J. Liu, W. Shi, D. Z. Pan, and N. Sun, "A 0.4-to-40 MS/s 75.7 dB-SNDR fully dynamic event-driven pipelined ADC with 3-stage cascoded floating inverter amplifier," in *IEEE Int. Solid-State Circuits Conf. (ISSCC) Dig. Tech. Papers*, Feb. 2021, pp. 376–378, doi: 10.1109/ISSCC42613.2021.9365753.

[17] A. Matsuoka, T. Nezuka, and T. Iizuka, "Fully dynamic discrete-time $\Delta\Sigma$ ADC using closed-loop two-stage cascoded floating inverter amplifiers," *IEEE Trans. Circuits Syst. II, Exp. Briefs*, vol. 69, no. 3, pp. 944–948, Mar. 2022, doi: 10.1109/TCSII.2021.3134963.

[18] R. S. A. Kumar, N. Krishnapura, and P. Banerjee, "Analysis and design of a discrete-time delta-sigma modulator using a cascoded floating-inverter-based dynamic amplifier," *IEEE J. Solid-State Circuits*, early access, May 18, 2022, doi: 10.1109/JSSC.2022.3171790.

[19] B. R. Gregoire and U.-K. Moon, "An over-60 dB true rail-to-rail performance using correlated level shifting and an opamp with only 30 dB loop gain," *IEEE J. Solid-State Circuits*, vol. 43, no. 12, pp. 2620–2630, Dec. 2008, doi: 10.1109/JSSC.2008.2006312.

[20] E. Eland, S. Karmakar, B. Gönen, R. van Veldhoven, and K. A. A. Makinwa, "A 440-μW, 109.8-dB DR, 106.5-dB SNDR discrete-time zoom ADC with a 20-kHz BW," *IEEE J. Solid-State Circuits*, vol. 56, no. 4, pp. 1207–1215, Apr. 2021, doi: 10.1109/JSSC.2020.3044896.

[21] H. Zhang, Z. Tan, and K. Nguyen, "Inverter-based low-power delta–sigma modulator using correlated level shifting technique," *Electron. Lett.*, vol. 53, no. 25, pp. 1663–1665, 2018.

[22] S. Pavan, R. Schreier, and G. C. Temes, "Circuit design for discrete-time delta-sigma ADCs," in *Understanding Delta-Sigma Data Converters*, 12th ed. Hoboken, NJ, USA: Wiley, 2017, pp. 180–182.

[23] P. J. A. Harpe *et al.*, "A 26 μW 8 bit 10 MS/s asynchronous SAR ADC for low energy radios," *IEEE J. Solid-State Circuits*, vol. 46, no. 7, pp. 1585–1595, Jul. 2011, doi: 10.1109/JSSC.2011.2143870.

[24] H. Chandrakumar and D. Markovic, "A 15.2-enob continuous-time $\Delta\Sigma$ adc for a 7.3 μW 200 mv$_{\text{pp}}$-linear-input-range neural recording front-end," in *IEEE Int. Solid-State Circuits Conf. (ISSCC) Dig. Tech. Papers*, Feb. 2018, pp. 232–234, doi: 10.1109/ISSCC.2018.8310269.

[25] M. Konijnenburg *et al.*, "A 769 μW battery-powered single-chip SoC with BLE for multi-modal vital sign health patches," in *IEEE Int. Solid-State Circuits Conf. (ISSCC) Dig. Tech. Papers*, Feb. 2019, pp. 360–362, doi: 10.1109/ISSCC.2019.8662520.

[26] K. Choo, H. An, D. Sylvester, and D. Blaauw, "14.1-ENOB 184.9 dB-FoM capacitor-array-assisted cascaded charge-injection SAR ADC," in *IEEE Int. Solid-State Circuits Conf. (ISSCC) Dig. Tech. Papers*, Feb. 2021, pp. 372–374, doi: 10.1109/ISSCC42613.2021.9365863.

[27] C. Pochet, J. Huang, P. P. Mercier, and D. A. Hall, "A 400 mV$_{\text{pp}}$ 92.3 dB-SNDR 1 kHz-BW 2nd-order VCO-based ExG-to-digital front-end using a multiphase gated-inverted ring-oscillator quantizer," in *IEEE Int. Solid-State Circuits Conf. (ISSCC) Dig. Tech. Papers*, Feb. 2021, pp. 392–394, doi: 10.1109/ISSCC42613.2021.9365985.

[28] J. Huang and P. P. Mercier, "A distortion-free VCO-based sensor-to-digital front-end achieving 178.9 dB FoM and 128 dB SFDR with a calibration-free differential pulse-code modulation technique," in *IEEE Int. Solid-State Circuits Conf. (ISSCC) Dig. Tech. Papers*, Feb. 2021, pp. 386–388, doi: 10.1109/ISSCC42613.2021.9365950.

[29] Y.-S. Shu, L.-T. Kuo, and T.-Y. Lo, "An oversampling SAR ADC with DAC mismatch error shaping achieving 105 dB SFDR and 101 dB SNDR over 1 kHz BW in 55 nm CMOS," *IEEE J. Solid-State Circuits*, vol. 51, no. 12, pp. 2928–2940, Dec. 2016, doi: 10.1109/JSSC.2016.2592623.

Lingxin Meng received the B.E. degree from the School of Microelectronics, Tianjin University, Tianjin, China, in 2020. He is currently pursuing the Ph.D. degree with the School of Information Science and Electronic Engineering, Zhejiang University, Hangzhou, China.

His current researches mainly focus on low-power analog-to-digital converters and dynamic amplifiers.

Authorized licensed use limited to: Zhejiang University. Downloaded on March 22,2026 at 11:19:36 UTC from IEEE Xplore. Restrictions apply.

Yaopeng Hu (Student Member, IEEE) received the B.E. degree in electronic information engineering and the M.Sc. degree in electronics science and technology from Zhejiang University, Hangzhou, China, in 2019 and 2022, respectively.

His current research interests include data converters and low-power circuits design.

Yibo Zhao (Member, IEEE) received the B.E. degree in microelectronics science and engineering from the Hefei University of Technology, Hefei, China, in 2017. He is currently pursuing the Ph.D. degree with the College of Information Science and Electronic Engineering, Zhejiang University, Hangzhou, China.

His current research mainly focuses on the ultralow-power data converters.

Wanyuan Qu (Member, IEEE) received the B.S. degree from the Beijing University of Posts and Telecommunications, Beijing, China, in 2006, and the M.S. and Ph.D. degrees in electrical engineering from the Korea Advanced Institute of Science and Technology, Daejeon, South Korea, in 2008 and 2016, respectively.

He was a Principle Circuit Design Engineer with Silicon Works Ltd., Daejeon, from 2008 to 2017. Since 2017, he has been with Zhejiang University, Hangzhou, China, where he is currently an Associate Professor. He has been granted with eight U.S. patents and five Korean patents. His current research interests include high-power-density dc–dc converters, GaN drivers and converters, energy harvesters, and high-performance amplifiers.

Dr. Qu serves as a member of the Technical Program Committee (TPC) for IEEE Asian Solid-State Circuits Conference and IEEE Integrated Circuits, Technologies and Applications, and an Associate Editor for *Journal of Engineering* (IET).

Le Ye (Senior Member, IEEE) was born in Jiangsu, China, in 1983. He received the B.S. degree (Hons.) in physics from the Department of Physics, Nanjing University, Nanjing, China, in 2005, and the Ph.D. degree in microelectronics from the Institute of Microelectronics, Peking University, Beijing, China, in 2010.

From April 2009 to April 2010, he was a Visiting Scholar with the Institute of Circuits and Systems, Dresden University of Technology, Dresden, Germany. Since 2010, he has been a Faculty Member with Peking University, where he is currently an Associate Professor. He is currently the Dean of the IoT Research Center, Advanced Institute of Information Technology, Peking University, Hangzhou, China. He has authored or coauthored more than 40 articles. He holds more than 20 granted patents. His research interests include analog and mixed-signal IC design, ultra-low power IC design, computing-in-memory AI chip design, and implanted IC and micro-system for medical applications.

Dr. Ye was a recipient of the National Science Fund for Outstanding Young Scholars and Beijing New-Star Plan of Science and Technology in China. He has been an Associate Editor of the IEEE TRANSACTIONS ON CIRCUITS AND SYSTEMS—I: REGULAR PAPERS since 2020.

Menglian Zhao (Member, IEEE) received the M.S. degree in microelectronics and solid-state circuits and the Ph.D. degree in engineering circuits and systems from Zhejiang University, Hangzhou, China, in 2001 and 2004, respectively.

She joined the College of Electrical Engineering, Zhejiang University, in 2004. From 2005 to 2006, she was a Research Assistant with the Department of Electronic and Computer Engineering, The Hong Kong University of Science and Technology, Hong Kong. She is currently an Associate Professor with the College of Information Science and Electronic Engineering, Zhejiang University. Her current research interests include CMOS analog and mixed-signal integrated circuit design, low-power techniques for integrated circuits, and SoC.

Zhichao Tan (Senior Member, IEEE) received the B.Eng. degree from Xi'an Jiaotong University, Xi'an, China, in 2004, the M.Eng. degree from Peking University, Beijing, China, in 2008, and the Ph.D. degree from the Delft University of Technology, Delft, The Netherlands, in 2013.

From 2013 to 2019, he was a Staff IC Design Engineer with Analog Devices Inc., Wilmington, MA, USA, working on low-power, high-precision analog/mixed-signal circuit design. In 2019, he joined Zhejiang University, Hangzhou, China, as a Faculty Member. He holds five U.S. patents and has authored or coauthored more than 40 technical articles. His research interests are in the areas of energy-efficient sensor interfaces, precision analog circuits, and ultralow-power analog-to-digital converters (ADCs).

Dr. Tan was a TPC Member of the IEEE Asian Solid-State Circuits Conference and IEEE Sensors Conference. He was the Chair of IEEE Industrial Electronics Society Technical Committee on MEMS and Nanotechnology from 2019 to 2020. He is an Associate Editor of the IEEE SENSORS JOURNAL. He has served as an Associate Editor for the IEEE TRANSACTIONS ON CIRCUITS AND SYSTEMS—I: REGULAR PAPERS and IEEE TRANSACTIONS ON INDUSTRIAL ELECTRONICS.

Authorized licensed use limited to: Zhejiang University. Downloaded on March 22,2026 at 11:19:36 UTC from IEEE Xplore. Restrictions apply.