IEEE Asian Solid-State Circuits Conference
November 7-9, 2016/Toyama, Japan

A 4.86 mW 15-bit 22.5 MS/s Pipelined ADC with 74 dB SNDR in 90 nm CMOS Using Averaging Correlated Level Shifting Technique

Tsung-Chih Hung and Tai-Haur Kuo
Department of Electrical Engineering, National Cheng Kung University
Tainan, Taiwan
Email: {tchung, thkuo}@msic.ee.ncku.edu.tw

***Abstract*—This paper proposes an averaging correlated level shifting (Averaging-CLS) technique as a switched-capacitor amplification technique for reducing finite opamp gain error. The Averaging-CLS inverts the finite opamp gain error in the second amplifying phase and then averages it with that in the first amplifying phase. With Averaging-CLS, a high-resolution pipelined ADC can employ medium-accuracy high-efficiency ring amplifiers, which lowers the power consumption and cost of the ADC. Compared with conventional CLS, Averaging-CLS halves the sampling capacitance under the same SNR requirement. A 15-bit pipelined ADC, which operates from a 1.2 V power supply and utilizes an input range of 2.2 V peak-to-peak differential, was realized in a 90 nm CMOS technology. The ADC achieves a 74 dB peak SNDR at 22.5 MS/s conversion rate and consumes 4.86 mW, resulting in the Walden and Schreier Figure-of-Merits of 52.7fJ/conv.-step and 167.6dB, respectively.**

Keywords—Switched-capacitor amplification; correlated level shifting (CLS); pipelined ADC

I. INTRODUCTION

Switched-capacitor amplification is one of the most common functions in CMOS analog circuits, such as pipelined ADCs. The finite opamp gain is the key circuit nonideality that limits the performance of switched-capacitor-based ADCs, which is now severe due to the reduction in both supply voltage and intrinsic device gain in advanced CMOS technologies. The ring amplifier structure [1]-[4] was proposed for efficient switched-capacitor amplification. Although it enables slew-based charging and near rail-to-rail output swing via a stabilized three-stage inverter, the provided gain is still insufficient for high-accuracy amplification. The parallelization of coarse and fine ring amplifier structures [2] was developed to overcome this limitation. However, more external bias voltages are required to generate another dead-zone for the fine ring amplifier, which limits the practicality for considering the PVT variation. Another hybrid amplifier reported in [5] combines a dynamic amplifier with a class-AB amplifier to achieve high accuracy and bandwidth. But, the chip area is increased for implementing a replicated parallel loop, including capacitors and amplifiers. Other attractive alternatives are the correlated level shifting (CLS) techniques [1][6] that relax the opamp gain requirement and increase its output swing. However, CLS techniques require level shifting capacitors to enhance the equivalent gain, which increases load capacitance.

This paper proposes an averaging correlated level shifting technique, called Averaging-CLS, which achieves a high equivalent gain only with a medium-accuracy low-cost opamp. Compared with CLS techniques, the proposed technique halves the sampling capacitance under the same SNR requirement, which lowers the power consumption and cost of the ADC. This paper is organized as follows: Section II describes the proposed Averaging-CLS technique. Section III describes the prototype 15-bit pipelined ADC using Averaging-CLS. Finally, Section IV presents the measurement results of the prototype ADC, and concludes the paper in Section V.

II. AVERAGING-CLS TECHNIQUE

The fully-differential multiplying D/A converter (MDAC) using the proposed Averaging-CLS in a pipelined ADC is simplified to its 1.5-bit/stage single-ended counterpart for explaining the operation, as shown in Fig. 1. The operation requires four clock phases to complete the sampling-amplification process, which is the same as other CLS techniques. Fig. 1(a) shows that the sampling capacitors are divided into two equal parts C_1 and C_2, and that both sample the first input signal ($V_{I,\phi1}$) in the first sampling phase (ϕ_1). Fig. 1(b) shows that C_2 continues sampling the second input signal ($V_{I,\phi2}$) in the second sampling phase (ϕ_2). The level shifting capacitor (C_{CLS}) is reset during the sampling phases (ϕ_1 and ϕ_2) to eliminate memory effects. Then, as in traditional MDACs, Fig. 1(c) shows that the first output voltage ($V_{O,\phi3}$) is sampled in $C_{1,next}$ and $C_{2,next}$, which are the following stage's sampling capacitors. Meanwhile, C_{CLS} stores the voltage difference between $V_{O,\phi3}$ and $-V_{O,\phi3}$, where $-V_{O,\phi3}$ can be acquired from the differential counterpart. Finally, Fig. 1(d) shows that the C_{CLS} is used to level shift the output voltage of the opamp from $V_{O,\phi3}$ to $-V_{O,\phi3}$, so that the polarity of the error resulting from the finite opamp gain is inverted. The second output voltage ($V_{O,\phi4}$) is sampled on $C_{2,next}$. $C_{2,next}$ requires being connected during the amplifying phases (ϕ_3 and ϕ_4) to minimize the charge transferred from C_{CLS} during the second amplifying phase to maintain the requisite voltage difference across C_{CLS}. Fig. 2 shows the voltage waveforms across $C_{1,next}$ and $C_{2,next}$, from which the equivalent sampled output voltage ($V_{O,avg}$) of the next stage is the average value of $V_{O,\phi3}$ and $V_{O,\phi4}$. $V_{O,avg}$ approaches the ideal output voltage ($V_{O,ideal}$) which is free from the finite opamp gain error. Moreover, the noises in two

978-1-5090-3700-1/16/$31.00 ©2016 IEEE

Authorized licensed use limited to: Zhejiang University. Downloaded on April 15,2026 at 04:25:44 UTC from IEEE Xplore. Restrictions apply.

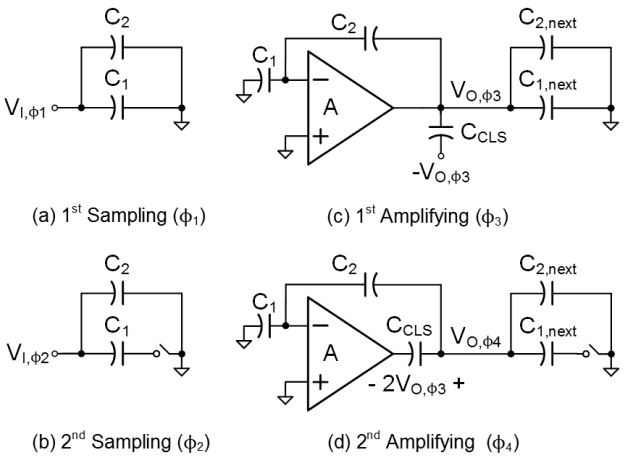

Fig. 1. A 1.5-bit/stage single-ended MDAC with Averaging-CLS.

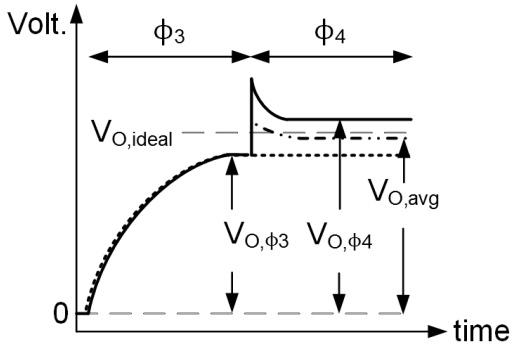

Fig. 2. Waveforms across $C_{1,next}$ and $C_{2,next}$ during amplifying phases.

separately sampled output voltages are uncorrelated, which effectively decreases the sampled noise by 3 dB.

The following is the equivalent gain derivation of Averaging-CLS. The derivation is simplified by neglecting the capacitor mismatch, thus $C_1 = C_2$ and $C_{1,next} = C_{2,next}$. By solving the charge conservation equations at the opamp's input node and MDAC's output node between ϕ_3 and ϕ_4, the output voltages $V_{O,\phi3}$ and $V_{O,\phi4}$ can be expressed as

$$\begin{cases} V_{O,\phi3} = \dfrac{1}{1+\dfrac{1}{T}} \cdot \left(V_{I,\phi1} + V_{I,\phi2}\right) = \dfrac{1}{1+\dfrac{1}{T}} \cdot V_{O,ideal} \\ V_{O,\phi4} = \dfrac{3+T+\lambda}{1+T+\lambda} \cdot V_{O,\phi3} \end{cases} \quad (1)$$

where T is the loop gain (Aβ) of the MDAC, β is the feedback factor and λ is the ratio of the other load capacitance to C_{CLS} in the second amplifying phase.

$$\lambda = \frac{C_{2,next} + C_2 \cdot (1-\beta)}{C_{CLS}} \quad (2)$$

The equivalent sampled output voltage ($V_{O,avg}$) is found by averaging $V_{O,\phi3}$ and $V_{O,\phi4}$

$$V_{O,avg} = \frac{C_{1,next} V_{O,\phi3} + C_{2,next} V_{O,\phi4}}{C_{1,next} + C_{2,next}} = \frac{1}{1+\dfrac{1}{T_{EQ}}} \cdot V_{O,ideal} \quad (3)$$

where the equivalent loop gain (T_{EQ}) is given by

$$T_{EQ} = \frac{T \cdot (2+T+\lambda)}{1+\lambda} \approx \frac{T^2}{1+\lambda} \quad (4)$$

Accordingly, the equivalent gain (A_{EQ}) is greatly enhanced

$$A_{EQ} = \frac{T_{EQ}}{\beta} \approx A \cdot \frac{A\beta}{1+\lambda} \quad (5)$$

As can be seen, the equivalent gain is identical to CLS [6].

III. THE PROTOTYPE 15-BIT PIPELINED ADC

A 15-bit pipelined ADC with differential 3.5-bit/stage MDACs is implemented with the proposed Averaging-CLS technique. For simplicity, Fig. 3 shows the positive path of the architecture, including the detailed circuits of stage 1 and stage 2. Except for the MDAC of stage 1, all other MDACs employ the float-sampling scheme [1] to eliminate the common-mode feedback (CMFB) circuit for further power and area savings. Fig.3 shows implementation details of the float-sampling scheme in stage 2. In addition, a SHA-less front-end is used for saving power. The flipped-around MDAC structure is used to increase the feedback factor (β=1/8) for higher loop gain and bandwidth. From the timing diagram shown in Fig. 4, the sub-ADC of stage 1 samples the input signal at the end of phase-1 (ϕ_1), and compares/latches in phase-2 (ϕ_2). As there is sufficient time for comparator latching, the comparator design is relaxed. Thus dynamic comparators are used in this work. Without adopting any gain enhancement technique, the opamp gain requirements of stages 1 and 2 are respectively around 90 and 72 dB, which is a design challenge in advanced CMOS technologies. In this work, the designed C_{CLS} is equal to the other load capacitance, which results in λ = 1. With β = 1/8 and λ = 1, the required opamp gain is reduced from 90 dB to 57 dB by the proposed Averaging-CLS technique. Consequently, medium-accuracy, low-power, low-cost opamps can be used in a high-resolution ADC. In the pipelined ADC, the opamp gain requirement in stages 3 and 4 are around 54 and 35 dB, so the Averaging CLS is not required, thereby saving power and area.

The slew rate of the chosen opamp is an important consideration for Averaging-CLS, because the transient effects in the operation will degrade the performance. For Averaging-CLS, the transient effects occur during transition from the first amplifying phase to the second. At the beginning of the second amplifying phase, the opamp output will quickly transit and cause a signal dependent glitch at the opamp output node that degrades settling speed. In this work, the transient issue is alleviated by adopting a high-efficiency ring amplifier structure. The transition time can be significantly reduced by the slew-based charging characteristic of the ring amplifier. Furthermore, the performance of ring amplifier scales with process, while the speed and power consumption also benefit from the improved power-delay product [1]. The MDAC of stage 1 in the prototype ADC employs a self-biased ring amplifier [3] to avoid the need for external bias voltages in a conventional ring amplifier. Fig. 5 shows the ring amplifier and CMFB circuit adopted in this work. The C_C in first stage of the ring amplifier is used to eliminate the offset [1].

Authorized licensed use limited to: Zhejiang University. Downloaded on April 15,2026 at 04:25:44 UTC from IEEE Xplore. Restrictions apply.

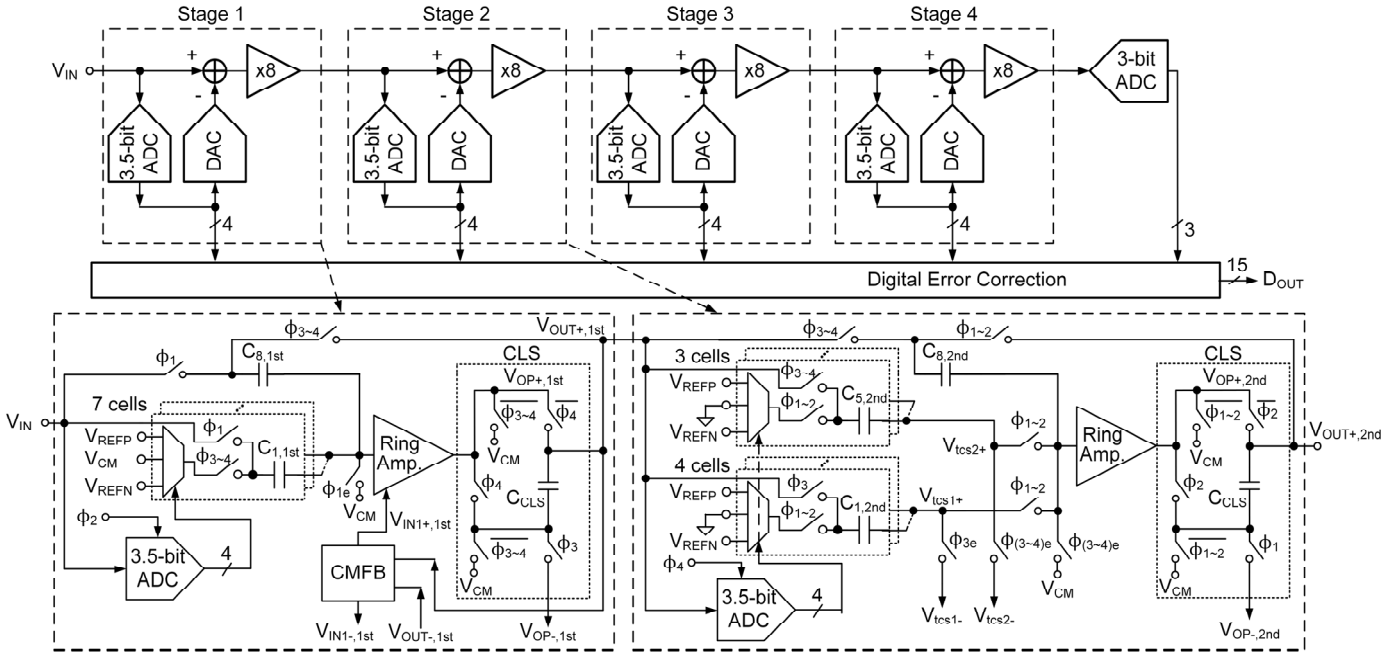

Fig. 3. The 15-bit pipelined ADC using Averaging-CLS technique.

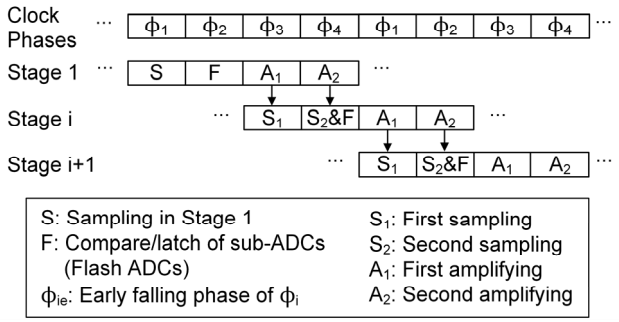

Fig. 4. Timing diagram of the proposed ADC.

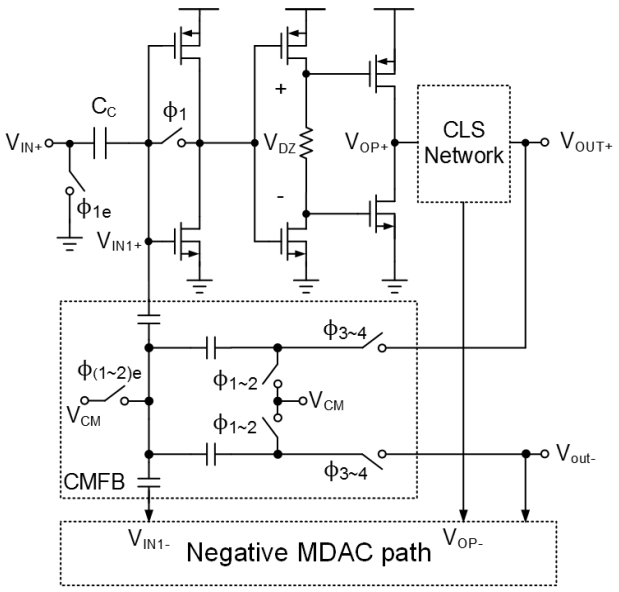

Fig. 5. Self-biased ring amplifier and CMFB circuit of MDAC in stage 1.

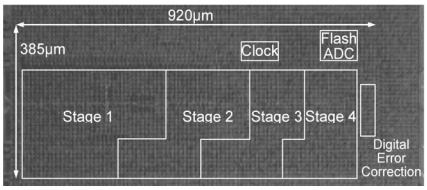

Fig. 6. ADC chip micrograph.

IV. Measurement Results

The proposed 15-bit pipelined ADC using Averaging-CLS was fabricated in a 90 nm 1P9M CMOS technology. The ADC active area occupies 0.35 mm^2, as shown in Fig. 6. Fig. 7 shows that the measured DNL and INL are within +0.49/-0.61 LSB and +3.23/-2.86 LSB, respectively. Fig. 8 shows the measured spectrums at 22.5 MS/s. With a 2 MHz input, the measured SNDR, SNR and SFDR are 74.0, 74.3 and 89.1 dB, respectively; with a 10MHz input, the measured SNDR, SNR and SFDR are 71.1, 71.4 and 87.4 dB, respectively. Fig. 9 shows the dynamic performance versus input frequencies at a sampling rate of 22.5 MS/s.

TABLE I summarizes and compares the measured performance with state-of-the-art high-resolution (> 70 dB SNDR@Nyquist) and high-speed (> 20 MS/s) pipelined ADCs. The total power consumption is 4.86 mW, at 22.5 MS/s from a 1.2 V supply. This work achieves good FoM_W and FOM_S. Although [4][5][7] have better FoM_W and FOM_S, compared with [5], which is implemented with replicated circuits, this work has a much smaller active area, demonstrating the area-efficient advantage of the proposed Averaging-CLS with similar SNR to [5]. In addition, compared with [4][7], this work has better peak SNDR. Moreover, the power efficiency of pipelined SAR ADCs degrades when increasing the bit number of sub-ADCs to achieve higher resolution.

Authorized licensed use limited to: Zhejiang University. Downloaded on April 15,2026 at 04:25:44 UTC from IEEE Xplore. Restrictions apply.

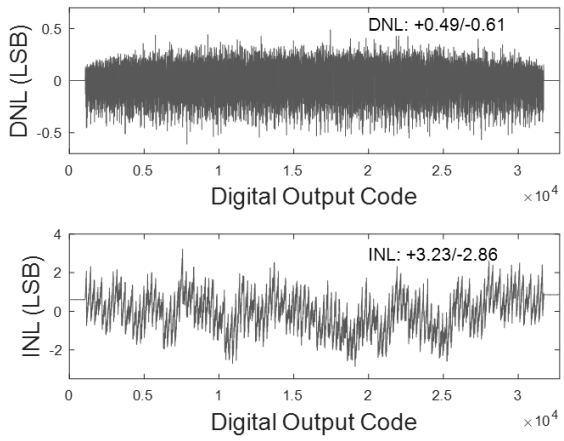

Fig. 7. Measured INL and DNL.

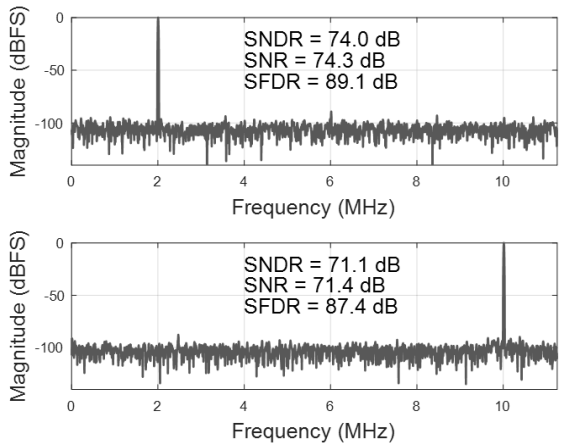

Fig. 8. Measured FFT plots.

TABLE I. PERFORMANCE SUMMARY AND COMPARISON

	This Work	ISSCC 2015 [4]	ISSCC 2012 [7]	ISSCC 2014 [8]	ASCCC 2013 [9]	VLSIC 2014 [5]	ISSCC 2011 [10]
Technology	90nm	65nm	0.13μm	0.13μm	0.13μm	0.18μm	0.18μm
Architecture	Pipeline	Pipeline SAR	Pipeline SAR	Pipeline	Pipeline	Pipeline	Pipeline
Supply Voltage (V)	1.2	1.2	1.2	1.2	1.3	1.3	1.8
Differential Input Range	2.2 V_{pp}	2.4 V_{pp}	2 V_{pp}	2 V_{pp}	2 V_{pp}	2.4 V_{pp}	2.5 V_{pp}
Resolution (bit)	15	13	14	15	14	15	16
f_S (MS/s)	22.5	50	30	50	150	30	80
$SNDR_{Peak}$ (dB)	74.0	71.5	70.8	74.5	71.3	74.2	77.6
SNDR@NY(dB)	71.1	70.9	70.4	73.1	70.5	72	75
Power (mW)	4.86	1	2.54	21.6	85	6	100
Active Area (mm^2)	0.35	0.054	0.24	0.1	4.4	3.06	9.9
Best FOM_W* (fJ/conv.-step)	52.7	6.5	29.9	99.6	188.8	47.7	201.6
FOM_W@NY (fJ/conv.-step)	73.6	6.9	31.3	117	207	61.5	272
Best FOM_S**(dB)	167.6	175.5	168.5	165.1	160.8	168.2	163.6
FOM_S@NY (dB)	164.7	174.9	168.1	163.7	160	166	161

$$^{*}FOM_W = \frac{Power}{2^{ENOB} \cdot f_S}, ENOB = \frac{SNDR - 1.76}{6.02}$$

$$^{**}FOM_S = SNDR + 10 \cdot \log\left(\frac{f_S/2}{Power}\right)$$

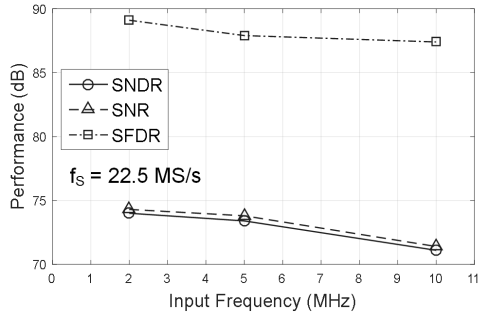

Fig. 9. Dynamic performance versus input frequencies.

V. CONCLUSION

This paper proposes Averaging-CLS as a switched-capacitor amplification technique for reducing the finite opamp gain error. With Averaging-CLS, a high-resolution pipelined ADC can adopt with medium-accuracy ring amplifiers and smaller sampling-capacitor sizes compared with conventional CLS, which lowers the power consumption and cost of the ADC. The measured results show that the 15-bit 22.5 MS/s pipelined ADC consumes only 4.86 mW while achieving 74 dB peak SNDR, resulting in the Walden and Schreier Figure-of-Merits of 52.7 fJ/conv.-step and 167.6 dB, respectively, with an active area of 0.35 mm^2 in a 90 nm CMOS technology.

ACKNOWLEDGMENT

The authors would like to acknowledge chip fabrication support provided by National Chip Implementation Center (CIC), Taiwan.

REFERENCES

[1] B. Hershberg, S. Weaver, K. Sobue, S. Takeuchi, K. Hamashita, and U. Moon, "Ring amplifiers for switched capacitor circuits," *IEEE J. Solid-State Circuits,* vol. 47, no. 12, pp. 2928–2942, Dec. 2012.

[2] B. Hershberg and U. Moon, "A 75.9 dB-SNDR 2.96 mW 29 fJ/convstep ringamp-only pipelined ADC," in *IEEE Symp. VLSI Circuits Dig. Tech. Papers*, 2013, pp. 94–95.

[3] Y. Lim and M. P. Flynn, "A 100 MS/s, 10.5 bit, 2.46 mW comparator-less pipeline ADC using self-biased ring amplifiers," *IEEE J. Solid-State Circuits,* vol. 50, no. 10, pp. 2331–2341, Oct. 2015.

[4] Y. Lim and M. P. Flynn, "A 1 mW 71.5 dB SNDR 50 MS/S 13b fully differential ring-amplifier-based SAR-assisted pipeline ADC," in *IEEE ISSCC Dig. Tech. Papers,* 2015, pp. 458–459.

[5] H. Venkatram, T. Oh, K. Sobue, K. Hamashita, and U.-K. Moon, "A 48 fJ/CS, 74 dB SNDR, 87 dB SFDR, 85 dB THD, 30 MS/s pipelined ADC using hybrid dynamic amplifier," in *IEEE Symp. VLSI Circuits Dig. Tech. Papers*, 2014, pp. 46–47.

[6] B. R. Gregoire and U. Moon, "An over-60 dB true rail-to-rail performance using correlated level shifting and an opamp with only 30 dB loop gain," *IEEE J. Solid-State Circuits*, vol. 43, no. 12, pp. 2620–2630, Dec. 2008.

[7] H.-Y. Lee, B. Lee, and U.-K. Moon, "A 31.3 fJ/conversion-step 70.4 dB SNDR 30 MS/s 1.2 V two-step pipelined ADC in 0.13 μm CMOS," in *IEEE ISSCC Dig. Tech. Papers,* 2012, pp. 474–476.

[8] D.-Y. Chang *et al.*, "A 21 mW 15 b 48 MS/s zero-crossing pipeline ADC in 0.13 m CMOS with 74 dB SNDR," in *IEEE ISSCC Dig. Tech. Papers,* 2014, pp. 204–205.

[9] C. Yang, F. Li, W. Li, Z. Wang, "An 85mW 14-bit 150MS/s pipelined ADC with 71.3dB peak SNDR in 130nm CMOS," in *Proc. IEEE ASSCC*, 2013, pp. 85-88.

[10] J. Brunsilius *et al.*, "A 16b 80 MS/s 100 mW 77.6 dB SNR CMOS pipeline ADC," in *IEEE ISSCC Dig. Tech. Papers,* 2011, pp. 186–187.

Authorized licensed use limited to: Zhejiang University. Downloaded on April 15,2026 at 04:25:44 UTC from IEEE Xplore. Restrictions apply.