Two-Phase Correlated Level Shifting Switched-Capacitor Techniques

Amr Essam
Mentor Graphics Egypt
Email: amr_essam@mentor.com

Mohammed Dessouky
Mentor Graphics Egypt
Ain Shams University

Abdelhalim Zekry
Ain Shams University
Cairo, Egypt

***Abstract*—In this paper, two techniques aiming to improve the performance of the switched-capacitor correlated-level-shifting technique are introduced. While boosting the equivalent opamp dc gain, this technique uses three clock phases. First, a time-shifted two-phase sampling approach is introduced with the addition of another set of sampling capacitors. However, this configuration has the disadvantages of error accumulation, increased mismatch and capacitor memory effects. In the second approach, all of these inconveniences are eliminated using a time-aligned two-phase sampling method. Simulation results show the equivalence of a conventional multiply-by-two switched-capacitor stage using a 60-dB dc gain opamp when compared with the correlated-level-shifting, the time-shifted and the time-aligned configurations, all using opamps with only 30-dB dc gain.**

***Index Terms*— Switched-Capacitor circuits, Opamp gain boosting, Correlated double sampling (CDS), Correlated level shifting (CLS).**

I. Introduction

Sswitched-capacitor circuit techniques are widely used in many applications including filtering and analog-to-digital conversion. It mainly relies on achieving good capacitor matching and high opamp dc gain, both limiting the achievable accuracy of such circuits. As the CMOS process advances, producing better-matched capacitors is becoming easier. However, because of the decreasing supply voltage, designing high-gain and high-bandwidth opamps with good output swing is becoming more difficult, as cascoding of devices limits output signal swing. Many techniques have been proposed to alleviate the low gain opamp issue. Digital calibration is an attractive approach but it requires a significant digital circuit complexity, and even more so for background calibration [2].

Correlated double sampling (CDS) technique proposed in [3] provides gain enhancement at the cost of noise power and three-phase complex clocking. A parallel correlated double sampling (PCDS) technique presented later in [4] avoids the noise power penalty of CDS. However, both techniques does not allow for high signal swing since they are limited by headroom considerations. The correlated level shifting (CLS) [5] technique offers a solution to both the gain and the swing limitation while still inheriting the three-phase requirement. This work introduces two new improvements for the CLS technique making use of the time-aligned CDS [6] and time-shifted CDS [7] concepts in order to operate the CLS circuits using only two clock phases.

This paper is organized as follows. Section II gives an overview of the CLS operation steps. Section III illustrates the operation of the Time-Shifted CLS technique. Section IV illustrates the operation of the Time-Aligned CLS technique. Section V shows the step response results of CLS, TS-CLS and TA-CLS using opamp with dc gain of 30dB compared to that using opamp with dc gain of 60dB without any of the above CLS techniques.

II. Correlated Level Shifting Technique

A typical switched capacitor multiply-by-2 circuit operation is shown in Fig. 1. The input signal is sampled during the sample phase on both sampling capacitors Cs. During the output phase, capacitor configurations causes one of the capacitors to completely discharge into the second one leading to a double input step at the opamp output. Due to the amplifier finite gain, the output gain expression can be deduced to give

$$Vout = 2Vin\,(1 - \frac{1}{A})$$

where A is the finite opamp gain. Therefore, the second term is an error term that appears due to the finite opamp gain.

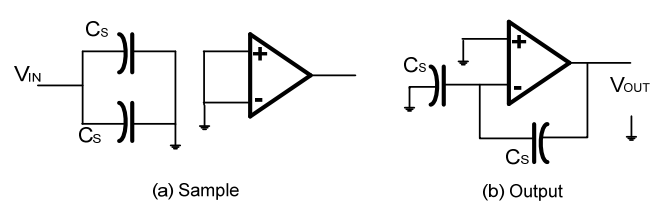

Fig. 1. Typical SC Multiply-by-two circuit.

The correlated level shifting (CLS) technique, shown in Fig.2, simultaneously decreases the error due to finite opamp gain and allows operation to and beyond the supply rails (true rail-to-rail operation). This is achieved through storing an estimate of the desired signal on a special capacitor placed at

978-1-4244-5816-5/09/$26.00 ©2009 IEEE
Authorized licensed use limited to: Zhejiang University. Downloaded on April 15,2026 at 03:43:47 UTC from IEEE Xplore. Restrictions apply.

the opamp output (C_{CLS} in Fig. 2.) during an "estimate" phase. This circuit can be analyzed to show that output voltage at the end of the estimation phase is

$$Vout = 2Vin\left(\frac{1}{1+\frac{1}{T}}\right)$$

Where

$$T = Aest\left(\frac{Cs}{2Cs + Cin}\right)$$

is the opamp loop gain during the estimation phase. Cin is the input capacitance of the opamp.

After that, subtracting the signal from the active circuitry during a "level shift" phase. The effective loop-gain is the product of the loop-gains during the estimate and level shift phases. Also, the output voltage at the end of the level shift phase can is

$$Vout = 2Vin\left(\frac{1}{1+\frac{1}{Teq}}\right)$$

Where

$$Teq = T(2+T) \approx T^2$$

Assuming that opamp finite gain in estimation phase (A_{EST}) equals that in level shift phase (A_{LS}).

This enables, for example, a single-stage opamp to have the accuracy of a two-stage one. The increased signal swing means that the same signal-to-noise ratio (SNR) can be achieved using smaller sampling capacitors. Thus, it could be argued that CLS can provide accurate results at a higher speed and lower power than the traditional approach of using high dc gain opamps. This is especially true at low power supplies.

As shown in Fig.2, CLS operation requires three phases: 1) sample input, 2) estimate output signal and store it on C_{CLS}, 3) level shift to eliminate signal from opamp. The output waveform is also shown to illustrate operation in different clock phases. This directly limits the conversion speed. A level shifting capacitor C_{CLS} is used to maintain the opamp output swing low.

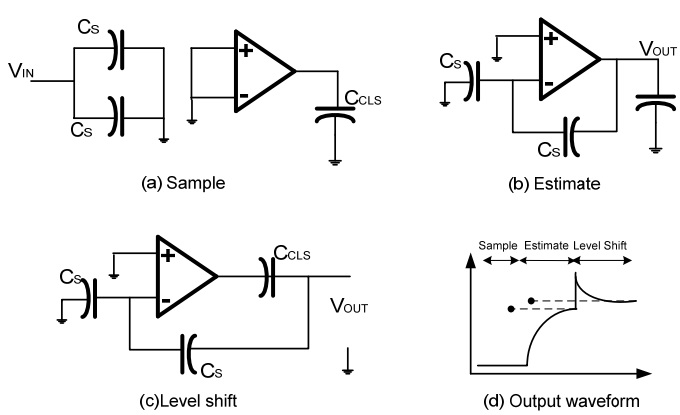

Fig. 2. Multiply-by-two circuit showing the basic operation of CLS technique.

In order to operate CLS with two phases, time-shifted CLS and time-aligned CLS techniques are proposed in sections III and IV.

III. Time-Shifted CLS (TS-CLS)

Based on the time-shifted CDS technique [7], a proposal of time-shifted CLS is shown in Fig. 3. In the time-shifted CLS technique, the opamp transfers the predicted output to the next stage during prediction phase while input value is being sampled onto Cs. In the level shift phase, the error compensated output is transferred. In this phase, the predicted input value from the previous stage is sampled onto Cp in preparation for the next prediction phase. Disadvantages of time-shifted CLS technique appear when using TS-CLS in a cascaded stage configuration as in many filtering and analog-to-digital conversion applications. It will result in error accumulation due to using sample of the predicted input to charge the C_{CLS} with the predicted output. Also, time-shifted CLS requires extra set of matched capacitors (C_P), mismatch between C_P and C_S capacitor sets will result in accuracy reduction due to mismatch between loop gain in the estimate and level shift phases, also because the two sets (C_P and C_S) are used all the time with no available time slot for resetting, memory effect is one of the issues concerning time-shifted CLS technique.

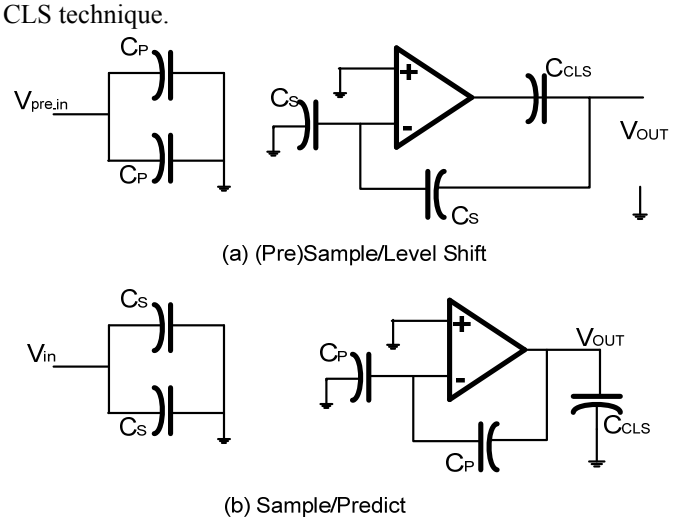

Fig. 3. Multiply-by-two circuit showing the basic operation of TS-CLS.

IV. Time-Aligned CLS (TA-CLS)

Similar to the time-aligned CDS technique [6], to overcome the error accumulation in time-shifted CLS technique, time-aligned CLS technique is proposed as shown in Fig. 4. Time-aligned CLS technique prevents this accumulation of prediction error in cascaded switched-capacitor designs while maintaining the two-phase operation of time-shifted CLS technique. With the time-aligned CLS technique, input sample-and-hold (S/H) stage can also be eliminated to save power (while this is not the case in TS-CLS), which is becoming a common trend in pipelined ADCs [4].

Instead of providing the prediction signal and the true signal over two phases as in time-shifted CLS, the time-aligned CLS provides only the true signal (for use in both prediction as well as level shift modes) once during level shift phase onto one of the two sets of capacitors (C_A or C_B in Fig. 4). After the prediction (using C_A for example), the input signal capacitors (C_A) are used to amplify/transfer the signal/residue to the next stage (now with improved

Authorized licensed use limited to: Zhejiang University. Downloaded on April 15,2026 at 03:43:47 UTC from IEEE Xplore. Restrictions apply.

accuracy). During this same phase, the other input capacitors (now CB) sample the new input value. These two pairs of sampling capacitors ($C_{A/B}$) exchange their roles from one conversion cycle to the next. In summary, the time-aligned CLS technique has two sets of matched capacitors C_A and C_B. One of them is used in each input sampling while the other is used in predict and level shift to generate the true output. Then, the two sets of capacitors alternate their roles to generate the error-compensated output of the next conversion cycle.

In the time-shifted CLS, C_P and C_S will be used all the time with no time slot for resetting before the new sample. So we should take care of memory effect in time-shifted CLS. On the other side, the time-aligned CLS technique is able to reset the set of capacitors that will be used in next sample phase before sampling and this eliminates any memory effect. Also, time-aligned CLS technique is more suitable for capacitor sharing technique which lowers the power consumption of the opamp by removing the load of the next stage. The feedback capacitor of the current stage can be used as the sample capacitor of next stage [8].

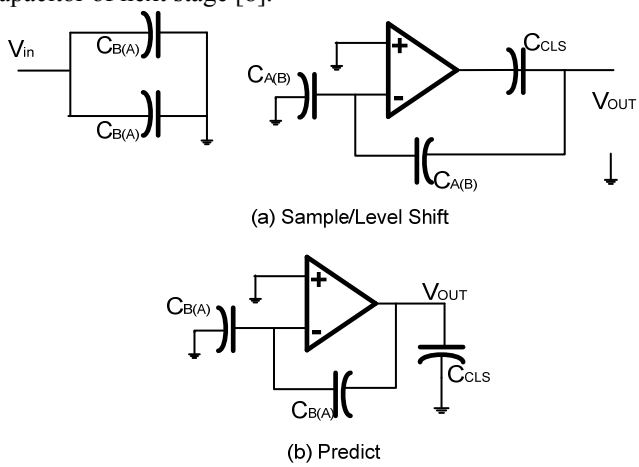

Fig. 4. Multiply-by-two circuit showing the basic operation of TA-CLS

V. Simulation Results

This section shows the settling error of a multiply-by-two circuit employing CLS, TS-CLS and TA-CLS techniques, shown in figures 2, 3, and 4 respectively, using an opamp with a dc gain of 30 dB compared to the same response of a conventional multiply-by-two circuit, shown in Fig. 1, using opamps with dc gains of 30 dB and 60 dB. A step of 500mV is applied at the input and an output step of 1V is expected in the ideal case. Table I summarizes settling error results. From such results, it is clear that equivalent gain of TA-CLS, TS-CLS and CLS techniques using opamp of dc gain 30dB are very near from that of No-CLS with opamp of dc gain 60dB. Also, all CLS techniques are better from the No-CLS with opamp dc gain 30dB. The slight difference in gain between TS-CLS and TA-CLS is due to smaller output step value at switching from predict phase to level shift phase in TS-CLS technique. This smaller step is due to replacing the C_P capacitors set used in the predict phase with a new charged set of capacitors C_S.

TABLE I
Summary of Step Simulation Results

Technique	Gain	%Error
No-CLS with opamp dc gain=60dB	1.9948	-0.26%
No-CLS with opamp dc gain=30dB	1.8648	-6.76%
Normal CLS	1.97226	-1.387%
TS-CLS	1.93418	-3.291%
TA-CLS	1.97266	-1.367%

VI. Conclusion

Time-shifted and time-aligned switched-capacitor CLS techniques are proposed. Such techniques speed up the operation of CLS by substituting three-phase clocking to only a much simpler two-phase one. Efficient usage of time-aligned CLS results in the elimination of a dedicated sample-and-hold input stage and allows use of low gain opamps which enables low power and high speed operation. Only one additional set of sampling capacitors is required in the proposed techniques. The gain error typically resulting from low gain opamps is eliminated without the use of any calibration techniques. As a proof of concept, simulation results for a step response are shown. There is still much room for design power saving by flexibility to use capacitor sharing in a pipelined ADC design using time-aligned CLS.

References

[1] S. Lewis, H. Fetterman, G. Gross, R. Pamachandran, T. Viswanathan, "A 10bit 20MS/s Analog-to-Digital Converter," *IEEE J. Solid State Circuits*, vol. 27, pp. 351-358, Mar. 1992.

[2] B. Murmann and B. Boser, "A 12bit 75MS/s Pipelined ADC Using Open Loop Residue Amplification," *IEEE J. Solid State Circuits*, vol. 38, pp. 2040-2050, Dec. 2003.

[3] Nagaraj, K., Viswanathan, T.R., Singhal, K., and Vlach, J.: 'Switched capacitor circuits with reduced sensitivity to amplifier gain', IEEE Trans. Circuits Syst., 1987, CAS-34, (5), pp. 571–574

[4] Musah, T., Gregoire, B.R., Naviasky, E., and Moon, U.: 'Parallel correlated double sampling technique for pipelined analogue-to-digital converters', Electron. Lett., 2007, 43, (23), pp. 1260–1261

[5] Gregoire, B.R., and Moon, U.: 'An over-60 dB true rail-to-rail performance using correlated level shifting and an opamp with only 30 dB loop gain', IEEE J. Soild-State Circuits, 2008, 43, (12), pp. 2620–2630

[6] J. Li and U. Moon, "A 1.8V 67mW 10bit 100MS/s Pipelined ADC Using Time-Shifted CDS Technique," *IEEE J. Solid State Circuits*, vol. 39, pp. 1468-1476, Sep. 2004.

[7] Y.Kook, Jipeng Li, Bumha Lee, Moon, U.: "Low-Power and High-Speed Pipelined ADC Using Time-Aligned CDS Technique" IEEE 2007 CICC, pp 321-324.

[8] Naga Sasidhar, Youn-Jae Kook, Seiji Takeuchi, Koichi Hamashita, Kaoru Takasuka, Pavan Kumar Hanumolu, and Un-Ku Moon.:"A Low Power Pipelined ADC Using Capacitor and Opamp Sharing Technique With a Scheme to Cancel the Effect of Signal Dependent Kickback", IEEE J. SOLID-STATE CIRCUITS, VOL. 44,pp 2392-2401

Authorized licensed use limited to: Zhejiang University. Downloaded on April 15,2026 at 03:43:47 UTC from IEEE Xplore. Restrictions apply.