25.2 A 2.87μW 1kHz-BW 94.0dB-SNDR 2-0 MASH ADC using FIA with Dynamic-Body-Biasing Assisted CLS Technique

Yaopeng Hu[1], Yibo Zhao[1], Wanyuan Qu[1], Le Ye[2], Menglian Zhao[1], Zhichao Tan[1]

[1]Zhejiang University, Hangzhou, China
[2]Peking University, Beijing, China

Micro-power ΔΣ modulators are suitable for low-bandwidth, high-precision applications, such as smart sensors, biomedical signal processing and battery-powered IoT devices. They achieve high SNR by oversampling and noise shaping, but higher order loops have stability problems. The multistage noise-shaping (MASH) technique solves this problem by realizing a high-order NTF with several low-order stages. However, for the MASH structure to be effective, the loop filter integrators must have high gain to avoid quantization noise leakage. Conventionally, they are realized by high-gain OTAs with gain-boosted cascode [1]. However, they draw static bias current, and their biasing and common mode feedback (CMFB) make them unattractive in duty-cycled operation in IoT applications due to the long settling time. The floating-inverter amplifier (FIA) [2] does not require biasing and CMFB, which makes it an attractive option for IoT applications. However, cascade topologies are needed to achieve high gain in [2-3], which increases complexity and area since each stage contributes a pole and requires a reservoir capacitor (C_{RES}). An additional C_{RES} is used in the output stage of [3] to optimize the settling performance and stability, which costs further area. This paper presents a dynamic-body-biasing assisted correlated level shifting (CLS) technique to boost the DC gain of a single-stage FIA with only one reservoir capacitor to above 66dB with minimal area overhead. This enables a fully dynamic MASH ADC that consumes 2.87μW while achieving 96.9dB DR and 94.0dB SNDR in 1kHz BW at an OSR of 125×, resulting in a SNDR-based Schreier FoM of 179.4dB.

Figure 25.2.1 shows the architecture of the proposed MASH ADC. It consists of a 2nd-order first stage and a zeroth-order backend stage. The first stage is drawn as the low distortion topology [4] where the input feedforward is implemented digitally. In the low distortion topology, the quantization error can be directly obtained at the output of the second integrator. Therefore, the backend ADC samples the 2nd integrator output directly, and its digital output is processed by a digital noise cancellation filter (DNCF). The quantization noise of the first stage can be cancelled since the DNCF transfer function matches the first stage NTF. The MASH ADC output is computed as $D_{OUT}=(z^{-2})D_{OUT1}+(1-z^{-1})^2D_{OUT2}$, where D_{OUT1} and D_{OUT2} are the digital output of the first and second stage, respectively. The second stage employs an asynchronous SAR, which can finish its conversion within a very small portion of a clock cycle. The proposed structure takes advantage of this feature and reuses the SAR to implement the direct input feedforward in [4] digitally, by multiplexing its input. The digital feedforward is added into the loop at the ΔΣ quantizer output. Effectively, the first stage becomes a zoom ADC [5] and the feedback DAC becomes multibit, which decreases the loop filter's swing and thus reduces power consumption. The integrator coefficients are set to 0.5 to further reduce their swing. The attenuation is compensated by a 4× passive gain in the backend ADC. From a signal flow point of view, the quantization errors introduced by the feedforward path ADC and the single-bit quantizer are added into the loop at the same point. Therefore, they are processed together in the same way, both cancelled in MASH operation, and do not appear in the final output.

The simplified circuit and timing diagram are shown in Fig. 25.2.2. In this design, the 3b asynchronous SAR ADC is reutilized between the second stage and the digital feedforward path. The feedforward quantization is completed during Φ_{22}, while the backend quantization is sampled during Φ_1 and converted in Φ_{21}. The unit capacitance of the SAR DAC is 9.5fF, and the 4× gain is obtained by the additional 12× scaling capacitor in parallel with the SAR DAC. The first stage zoom ADC employs 1LSB of over-ranging [5] to tolerate errors in the feedforward SAR. Flicker noise is eliminated by adding choppers in the first integrator. Data-weighted averaging (DWA) is employed to avoid distortion due to mismatch in the ΔΣ feedback DAC.

For simple implementation, the DNCF coefficients are not calibrated, which allows the DNCF to consist of only shifters and adders. Therefore, high-gain OTAs are required in the loop filter, which is fulfilled by the proposed FIA with dynamic-body-biasing assisted CLS. It works in 3 phases (Fig. 25.2.3). During the sampling phase Φ_1, C_{RES} is charged to V_{DD}, the input and output of the inverter are both reset to V_{CM} and the capacitors C_L and C_{CLS} are discharged. The integration phase is divided into two phases, Φ_{21} estimation and Φ_{22} level shift. During Φ_{21}, the body potential of PMOS and NMOS are V_{DD} and GND respectively, C_L and C_{CLS} are both load capacitances. At this moment, C_{RES} is connected to the inverter to provide drive capability, and the closed-loop amplification begins (the negative feedback capacitor is not shown in the figure). During this phase, the charge stored in C_{RES} is gradually released, accompanied by the decrease of the PMOS source voltage and the increase of the NMOS source voltage. Due to the body effect, the absolute value of the sum of threshold voltage $|V_{th,sum}|$ increases, which also helps to make the two MOS transistors cut off. In Φ_{22}, the direct output of the inverter, V_X, is disconnected from the top plate of C_L, the bottom plate of C_{CLS} is disconnected from V_{CM}, and the two nodes are connected. This change in circuit connection will make the voltage of V_X return to V_{CM}. At this time, the two MOS transistor body nodes are connected back to their sources, which can eliminate the body effect. Due to the decrease of |vth,sum|, the FIA has a short-term drive capability again. The $|\Delta V_{th,sum}|$ is ~100mV and enough for the level-shift phase when only a very small part of the charge needs to be transferred.

As shown in the bottom left of Fig. 25.2.3, the final output voltage is generated after two amplifications [6]. For the op-amp circuit design, it only needs an additional C_{CLS} and several switches based on FIA. The increased power consumption only comes from the further discharge of C_{RES} because of the slight $|V_{th,sum}|$ change. Simulation results of the gain vs. ΔV_{out} and the output voltage value distribution of the first stage integrator are shown in the bottom. The CLS boosts the DC gain of FIA from 40.2dB to 66.2dB. According to the simulation results of the SQNR vs. gain in the bottom right, the gain above 60dB is sufficient for the system. Additionally, the variation of output common-mode voltage $|\Delta V_{CM}|$ is positively correlated with the ratio of parasitic capacitance C_P to load capacitance C_L. Once CLS is introduced, C_{CLS} is also regarded as part of C_L during Φ_{21}, which will make $\Delta V_{OUT,CM}$ smaller.

The prototype 2-0 MASH ADC is fabricated in a 55nm CMOS process and occupies an active area of 0.136mm^2 (Fig. 25.2.7). As shown in Fig. 25.2.5, this ADC achieves a DR of 96.9dB (top). The measured SNDR/Power vs. power supply (bottom left) and power break down (bottom right) are also shown in Fig. 25.2.5. At 1.2V supply and 250kHz Fs, it consumes 2.87μW (reference 0.21μW, analog circuits 1.81μW, digital circuits 0.85μW). Figure 25.2.4 shows the measured spectrum with –1.9dBFS input at 278.5Hz. The measured SNDR, SNR and SFDR are 94.0dB, 95.8dB and 99.8dB, respectively, with DWA and chopper ON. Figure 25.2.6 summarizes the measured performance of this work and compares it with the state-of-the-art micro-power high-resolution ADCs. The presented ADC achieves an FoM_{S_SNDR} of 179.4dB and an FoM_{S_DR} of 182.3dB.

Acknowledgement:
The authors would like to thank Yuyan Liu, Lingxin Meng, Yuzhen Kou, Zhaonan Lu, Mengyu Li, Sheng Liu, for the technical discussion and chip test support.

References:
[1] R. Brewer et al., "A 100dB SNR 2.5MS/s output data rate ΔΣ ADC," *ISSCC*, pp. 172-591, Feb. 2005.
[2] X. Tang et al., "9.5 A 13.5b-ENOB Second-Order Noise-Shaping SAR with PVT-Robust Closed-Loop Dynamic Amplifier," *ISSCC*, pp. 162-164, Feb. 2020.
[3] X. Tang et al., "27.4 A 0.4-to-40MS/s 75.7dB-SNDR Fully Dynamic Event-Driven Pipelined ADC with 3-Stage Cascoded Floating Inverter Amplifier," *ISSCC*, pp. 376-378, Feb. 2021.
[4] J. Silva et al., "Low-distortion delta-sigma topologies for MASH architectures," *IEEE ISCAS*, pp. I-1144, May 2004.
[5] S. Karmakar et al., "A 280μW dynamic-zoom ADC with 120dB DR and 118dB SNDR in 1kHz BW," *ISSCC*, pp. 238-240, Feb. 2018.
[6] B. R. Gregoire and U. Moon, "An Over-60 dB True Rail-to-Rail Performance Using Correlated Level Shifting and an Opamp With Only 30 dB Loop Gain," *IEEE JSSC*, vol. 43, no. 12, pp. 2620-2630, Dec. 2008.

2022 IEEE International Solid- State Circuits Conference (ISSCC) | 978-1-6654-2800-2/22/$31.00 ©2022 IEEE | DOI: 10.1109/ISSCC42614.2022.9731544

Authorized licensed use limited to: Zhejiang University. Downloaded on March 13,2026 at 03:04:29 UTC from IEEE Xplore. Restrictions apply.

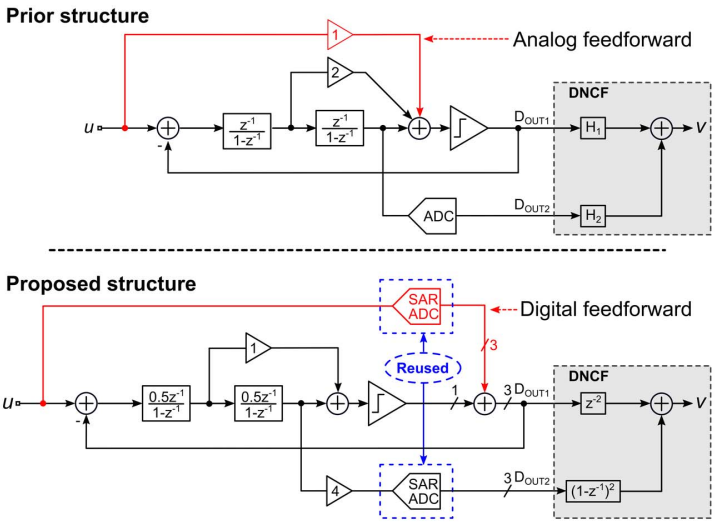

Figure 25.2.1: Block diagram of the proposed 2-0 MASH structure.

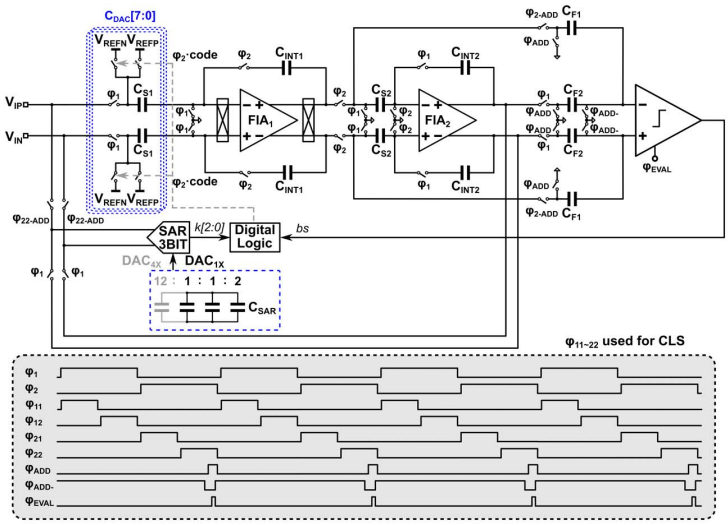

Figure 25.2.2: Implementation of the 2-0 MASH ADC with its timing diagram.

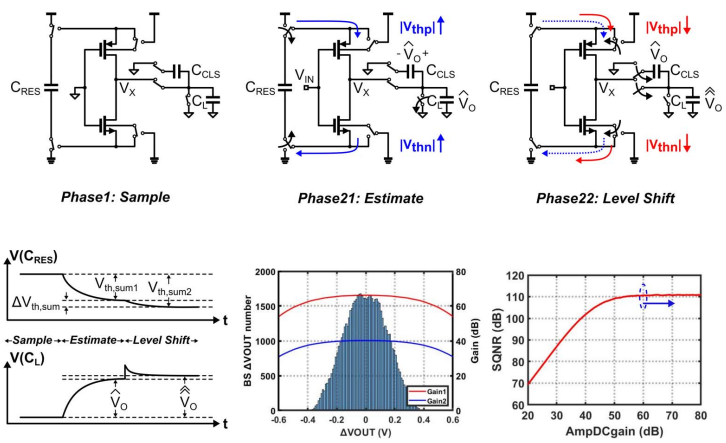

Figure 25.2.3: Simplified schematic (single-ended) and working stage of the proposed floating-inverter amplifier with dynamic-body-biasing assisted CLS technique.

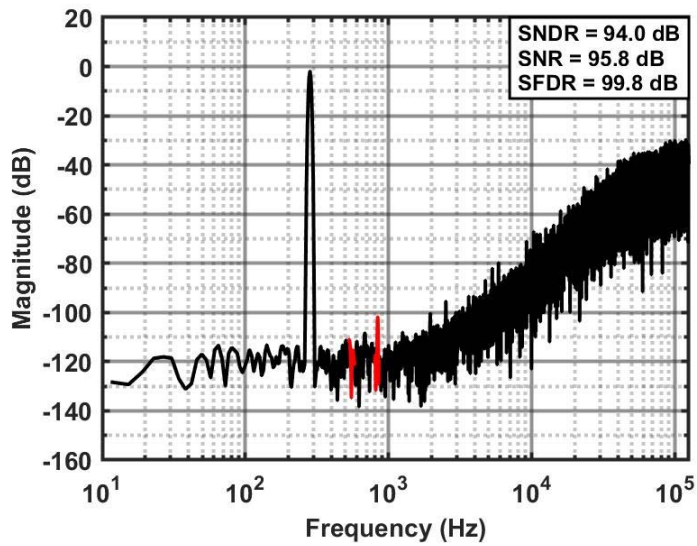

Figure 25.2.4: Measured output spectrum (2^{16} FFT points).

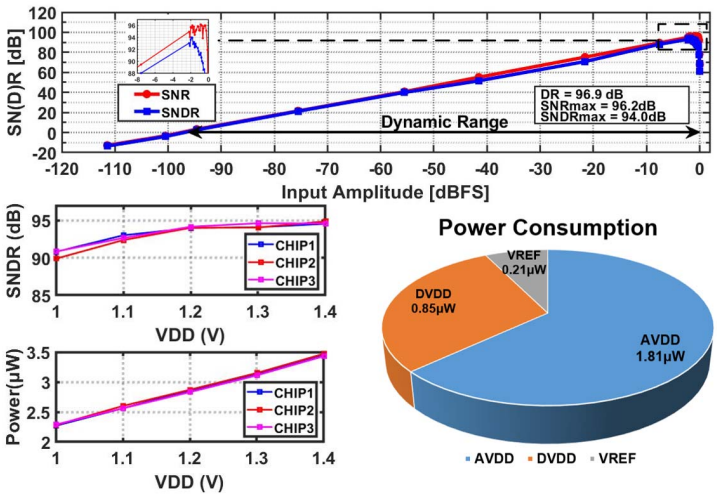

Figure 25.2.5: Measured SNDR/SNR vs. input amplitudes(top); measured SNDR/Power vs. power supply (bottom-left); measured power consumption when VDD = 1.2V (bottom-right).

	ISSCC-18 Hariprasad Chandrakumar	ISSCC-19 Mario Konijnenburg	ISSCC-21 Kyojin Choo	ISSCC-21 Corentin Pochet	ISSCC-21 Jiannan Huang	This work
Architecture	SDCT	NS-SAR	SAR	VCO	VCO	SDDT
Process[nm]	40	55	180	65	65	55
Fully Dynamic	No	No	Yes	No	No	Yes
Fs[kHz]	400	32	6	200	64	250
OSR	40	107	1	100	64	125
BW[kHz]	5	0.15	3	1	0.5	1
Supply[V]	1.2	1.3/0.9	1	1.2/0.8	0.8	1.2
Power[μW]	4.5	0.9	0.468	5.8	1.68	2.87
SNDR[dB]	93.5	78.8	86.9	92.3	94.2	94.0
DR[dB]	96.5	NA	NA	92.3	95.1	96.9
FoMs1[dB]	184.0	161.1	184.9	174.7	178.9	179.4
FoMs2[dB]	187.0	NA	NA	174.7	179.8	182.3

*FoMs1 = SNDR + 10*log10(BW/Power)*

*FoMs2 = DR + 10*log10(BW/Power)*

Figure 25.2.6: Performance summary and comparison (power consumption under 10μW).

Authorized licensed use limited to: Zhejiang University. Downloaded on March 13,2026 at 03:04:29 UTC from IEEE Xplore. Restrictions apply.

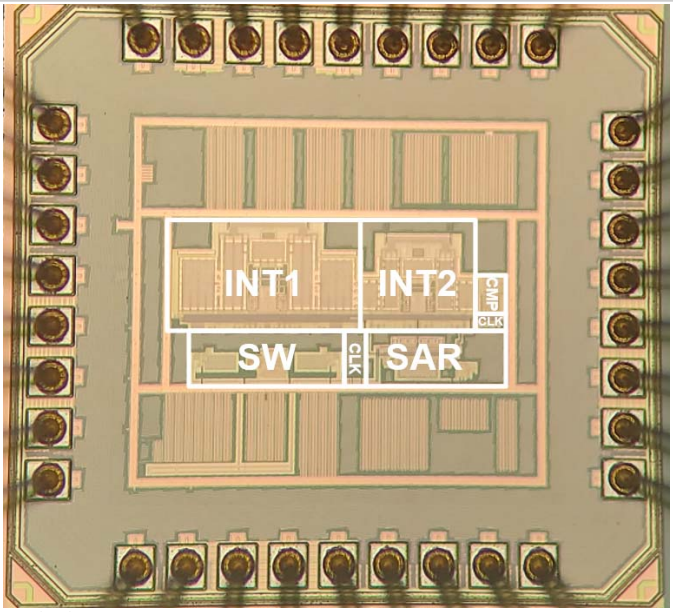

Figure 25.2.7: Die micrograph.

Authorized licensed use limited to: Zhejiang University. Downloaded on March 13,2026 at 03:04:29 UTC from IEEE Xplore. Restrictions apply.

 978-1-6654-2800-2/22/$31.00 ©2022 IEEE