2023 Global Conference on Information Technologies and Communications (GCITC)
Karnataka, India. Dec 1-3, 2023

2023 Global Conference on Information Technologies and Communications (GCITC) | 979-8-3503-0816-7/23/$31.00 ©2023 IEEE | DOI: 10.1109/GCITC60406.2023.10426549

Design of High Gain, Low Power, Subthreshold Operation Amplifier for Different Node Technologies and Comparative Analysis

Rajeev Rajagopal[1,↑], and Pankaj Arora[1,*]
[1]*Department of Electrical and Electronics Engineering*
Birla Institute of Technology and Science, Pilani
Rajasthan (333031), India
[↑]f20201237@pilani.bits-pilani.ac.in and [*]pankaj.arora@pilani.bits-pilani.ac.in

***Abstract*—This paper discusses the design and comparative analysis of Low supply voltage and ultra-low power consumption-based operational amplifier. This work focuses on the design of such a two-stage operational amplifier operating in the subthreshold region. A comparative analysis has been performed on several parameters comparing the results obtained to determine the optimal design of the operational amplifier. The said amplifier has been designed in the 180nm, 45nm, 32nm, and 16nm technology processes. When simulated on a SPICE-based circuit simulator, *LTSPICE*, the design achieves a maximum gain of 72.44dB with a Gain bandwidth product of 72.66KHz and a phase margin of 65.62° while dissipating a power of only 97.578nW which is ideal for low-power devices and biomedical applications.**

***Index Terms*—Operational amplifier, High Gain, Low Power, Subthreshold Operation, Bio-medical amplifier, CMOS analog Design, Low voltage**

I. Introduction

The advent of instrumentation in biomedical fields and the use of electronics for sensing applications has brought about the requirement of low voltage, high gain electronic amplifiers operating under low power consumption. Battery-operated devices and sensors in the bio-medical field tend to be low-voltage devices, it is crucial to prolong the life of such devices which is possible only through the reduction of the power consumed while maintaining the high efficiency of these devices. The biomedical applications of such amplifiers deal with low-frequency signals with small signal amplitudes [4]. Typically these are slow signals that do not warrant devices operating with high slew rates [5].

Biomedical sensing applications such as electroencephalography, electrocardiography, and electromyography or biomedical instrumental applications such as cochlear implants or muscle stimulants and pacemakers require analog front-end amplifiers with low supply voltages and low power consumption as a part of the entire device ensemble. Electronic amplifiers are the major power-consuming device of such circuits and in order to prolong battery life, it is of utmost importance to reduce the power consumption of the amplifier among the other electronic devices like filters, buffers, analog to digital converters, and digital to analog converters [2].

The power consumption of an amplifier can be reduced by reducing the voltage supply of the operational amplifier. For this purpose transistors in sub-threshold operation can be utilized. The Sub-threshold operation of transistors requires lesser supply voltages and consumes markedly lesser power than transistors operating in the saturation region. Sub-threshold region amplifiers generally consume power less than 1μW [7]. The sub-threshold transistor has an exponential relation with the input voltage applied at the gate, thereby making it easier to achieve higher gains. Scaling of such circuits sometimes presents practical inconveniences due to the appearance of short channel effects, hence it is essential to weigh the pros and cons of scaling the amplifier circuit down and modify the circuit to meet specific applications.

In this paper, one specific operational amplifier topology is proposed. The theoretical explanation behind the functioning of a sub-threshold region operational amplifier has been explained with all necessary equations listed below in section(II). The design guidelines to draft such sub-threshold amplifiers have been discussed, followed by the explanation of the proposed topology of the operational amplifiers in the 180nm process. Subsequently, the measurement results of the operational amplifier exploiting the effects of the sub-threshold amplifier have been listed and discussed. The process of scaling the amplifier down from 180nm to 45nm, 32nm, and 16nm has been explained and the results have been displayed. Finally, conclusions drawn from this paper have been discussed along with certain practical issues faced during the design of the amplifier and their drawbacks.

II. Proposed Two-Stage Operational Amplifier Design

A. Sub-threshold operation

As shown in figure(1), In the sub-threshold region, the transistor operates in the weak inversion region *i.e.* voltages below the threshold voltage (V_{th}) [14]. This region of operation is beneficial for low-supply voltage designs *i.e.* 1 Volt or lesser.

A circuit that operates in sub-threshold regions requires biasing voltages and currents much lower than sub-threshold region transistors thereby reducing the power consumption

Authorized licensed use limited to: Zhejiang University. Downloaded on December 23,2025 at 07:06:50 UTC from IEEE Xplore. Restrictions apply.

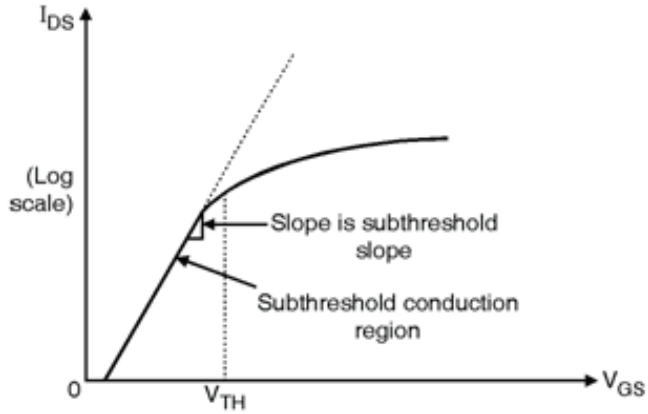

Fig. 1. Sub-threshold region of operation in transistor

of the entire system. The equation given below describes the relationship between the drain current of a sub-threshold transistor with applied voltage [9].

$$\begin{aligned} I_D &= \frac{W}{L} I_0 \exp \frac{V_{GS} - V_{th}}{mV_T} (1 - \exp \frac{-V_{DS}}{V_T}) \\ &\approx \frac{W}{L} I_0 \exp \frac{V_{GS} - V_{th}}{mV_T} \text{ (when } V_{DS} > 3V_T) \end{aligned} \tag{1}$$

Here *W/L* signifies the ratio of transistor width to length, V_{GS} signifies the gate to source voltage, and V_{DS} signifies drain to source voltage of the concerned transistor. V_{th} is the threshold voltage of the transistor and $V_T = \frac{k_B T}{q}$=26mV is the thermal voltage, generally considered a constant at a given temperature (K_B is the Boltzmann constant, *T* is the operational temperature and *q* is the elementary charge.). '*m*' represents the sub-threshold slope factor and is a process-dependant factor (generally, 1<*m*<2) similarly I_o is also a temperature-dependant process parameter. From the given drain current equation(1), an exponential relation can be established between the input voltage(V_{GS}) and the drain current, and parallels can be drawn between this equation and the current equation of a bipolar junction transistor. This motivates the higher trans-conductance and increased gain of sub-threshold region amplifiers. After considering the drain induced barrier lowering effects (*DIBL*), the threshold voltage of the transistor represented as V_{th} is given by [10]

$$V_{th} = V_{th0} - \lambda_D V_{DS} - \lambda_B V_{BS} \text{ with } \lambda_D \text{ and } \lambda_B > 0 \tag{2}$$

Here V_{BS} is the body-to-source voltage generally considered as 0, V_{th_0} is the threshold voltage at room temperature, and λ_B, λ_D is the body effect and *DIBL* coefficient respectively The equations for the trans-conductance(g_m) and drain-source resistance(r_d) are given below [7].

$$g_m = \frac{I_D}{mV_T} \tag{3}$$

$$\frac{W}{L} = \frac{I_D}{I_0} e^{(\frac{v_{TH} - v_{GS}}{mV_T})} \tag{4}$$

$$r_d = \frac{mV_t}{\lambda_d I_d} \tag{5}$$

The table I below displays the values of constants used in the various equations listed above [2].

TABLE I
TABLE OF CONSTANTS FOR 180NM

	$V_{th0}(mV)$	$I_0(nA)$	m	λ_D
NMOS	366.2	288	1.20	2.23 e^{-3}
PMOS	390.6	74	1.35	2.23 e^{-3}

The intrinsic DC gain of the transistor can be calculated by the following equation, $A_{V_0} = g_m r_d$ in the strong inversion(saturation region), however the intrinsic DC gain of the transistor in the sub-threshold region depends only on λ_D. This is due to the strong relationship between DIBL and the distance between drain and source regions, λ_d is mainly controlled by the length parameter of the transistor '*L*'.

B. Design Methodology of Proposed Amplifier

The proposed two-stage Op-Amp has been displayed below in figure(2). The design is relatively simple at the transistor level, all transistors used are of the bulk-transistor type, with the first stage of the amplifier being a simple differential amplifier with PMOS load and the second stage being a common source amplifier with PMOS load. No such techniques that utilize the exploitation of the transistor body terminal have been used in the proposed design, this implies that the voltage across the body and source terminals of the transistor is 0 (V_{BS} = 0). Miller compensation techniques have been implemented across the first and second stages of the amplifier to ensure closed-loop stability across the circuit. The compensation capacitor and resistor have been denoted by C_c and R_c respectively in the figure(2). The given figure(2) represents the transistor-level circuit diagram of the amplifier at the 180nm technology node, all transistors operate in the sub-threshold region. Bio-medical amplifiers operate under ultra-low power consumption, hence a supply voltage of 0.5V was selected for most designs and 0.7V for 16nm. 16nm technology node warranted a slightly higher supply voltage since the V_{th} of the 16nm FINFET Predictive Technology model was slightly higher than the V_{th} of transistors of the other Predictive Technology models. 0.5V was found to be the ideal voltage across several technology nodes, providing sufficient headroom to operate all transistors in the sub-threshold and reduce power consumption at the same time. Using equation(2), the value of V_{th} was calculated with the aid of constants provided in table I.

Since transistors in sub-threshold regions operate with a gate to source voltage V_{GS} lesser than or very close to the V_{th} it is vital to determine the V_{th}. Based on the common requirements of biomedical amplifiers or ultra-low-voltage amplifiers we were able to determine the design requirements for this amplifier, displayed below in table II.

Current through the two stages was approximated from the maximum tolerable power of the amplifier, using approximate

Authorized licensed use limited to: Zhejiang University. Downloaded on December 23,2025 at 07:06:50 UTC from IEEE Xplore. Restrictions apply.

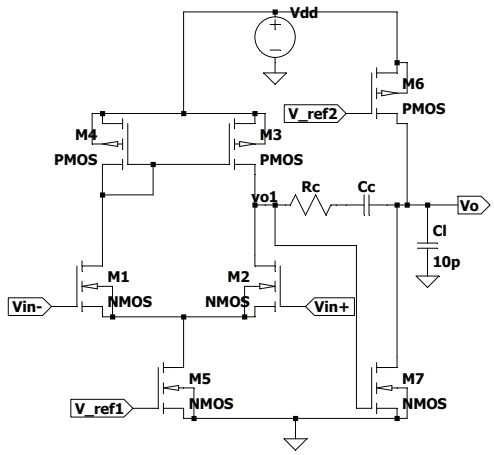

Fig. 2. Schematic of the Proposed Op-Amp

TABLE II
DESIGN GOALS

Open loop Gain	>70 dB
Unity Gain Bandwidth	>45kHz
Maximum Power Dissipation	<150nW
Phase Margin	>60°

values of the current, the W/L ratios for the transistors were determined using equation(4). After temporarily setting the aspect ratio of the transistors in the 180nm technology node the reference voltages (V_{ref1} and V_{ref_2}) to transistor M_5 and M_6 were determined by performing operating point analysis on the circuit to meet the gain and gain bandwidth product requirements. Subsequent AC analysis optimization sweeps helped to set the DC bias voltages V_{ref1} and V_{ref_2}. Similar optimization sweeps were performed to determine the optimal *W/L* ratios for the various transistors.

C. Techniques for Performance Enhancement

Miller compensation is a well-known performance enhancement technique for operational amplifiers like the one given in figure(2). Once the aspect ratios and DC biasing voltages of the transistors were set, the focus of the design, shifted towards maintaining stability and accounting for instabilities using phase margin and unity gain bandwidth of the closed loop system. The technique of Miller compensation introduces a compensation capacitor (C_c) and a compensation resistor (R_C) in a negative feedback topology between the first and second stages as shown in figure(2) [1]. The compensation capacitor helps splitting the pole at the output of the first stage. This method proposes a trade-off between the unity gain bandwidth of the circuit and the phase margin of the circuit. A well-known equation is used to perform the phase compensation to meet a required unity gain bandwidth using a phase compensation capacitance (equation(7)).

Using the values of g_m calculated from equation(3) and the required value of the phase margin in degrees, we can calculate the value of the compensation resistor (R_C) using another well know equation(6), displayed below [12]. The compensation resistance fixes the closed-loop stability of the circuit by setting an adequate phase margin while maximizing the bandwidth of the amplifier.

$$R_c = \frac{1}{2g_{m7}}\left(1+\sqrt{1+\frac{4g_{m7}C_L}{g_{m1}C_1\tan(\phi_M)}}\right) \tag{6}$$

$$C_c = \frac{g_{m1}}{2\pi.GBW} \tag{7}$$

In the above two equations (6) and (7), C_l represents the load capacitance, R_C and C_c represent the compensation resistance and capacitance respectively, ϕ_M is the value of phase margin in degrees and g_m is the trans-conductance of the given transistor. The slew rate(*SR*) can be defined as the rate of voltage or current per unit of time and is an essential component in determining the charge and discharge rate of the operational amplifier.

$$SR = \frac{2I_{d1,2}}{C_c} \tag{8}$$

$$SR = \frac{I_{d6,7}}{C_c + C_l} \tag{9}$$

Bio-medical amplifiers don't have a requirement for a high slew rate or generally prefer low slew rate devices as prolonging the life of the device is of utmost importance [2]. The slew rate can be calculated per stage using the given equations (8) and (9) [7]. I_{d1} is the drain current through the 1st transistor, I_{d7} is the drain current through transistor M_7, C_l is the load capacitance and C_c is the compensation capacitance. The general trade-off is between power consumption and the slew rate of the operational amplifier. The higher the power consumption, the higher the slew rate and vice versa.

D. Scaling to alternative technology nodes

The 1st order of design was done in the 180nm technology node. Miniaturization of devices is an essential part of analog IC design. For this specific op-amp design, constant voltage scaling is preferred over, generalized scaling. This is primarily due to the principle that in practical applications of peripheral circuitry, certain voltage levels may be required which would use multiple power supplies and level shifter circuits, thereby complicating the circuitry [13]. Scaling factor *S* was chosen as the ratio between the minimum transistor length of the new technology node and the stable technology node (180nm in this case). The V_{dd} was kept constant at 0.5V for all technology nodes (45nm and 32nm) except the 16nm process. Scaling the supply voltage below 0.5V may lead to poor output signal swing, distortion, and signal degeneration at the output [1]. For the 16nm technology, 0.7V was chosen as the supply voltage based on the nominal voltage provided in the specifications of

Authorized licensed use limited to: Zhejiang University. Downloaded on December 23,2025 at 07:06:50 UTC from IEEE Xplore. Restrictions apply.

the transistor library file to support the threshold voltages of the PMOS and NMOS and provide adequate voltage headroom to operate all the transistors in the circuits. Based on this principle, the 180nm technology process was linearly scaled down to 45nm, 32nm, and 16nm technology nodes. After scaling, optimization sweeps were performed on the transistor aspect ratios and DC biasing voltages to meet the voltage gain and unity-gain bandwidth considerations.

TABLE III
TRANSISTOR ASPECT RATIOS(IN $\mu m/\mu m$) AND CIRCUIT ELEMENTS

Parameter	180 nm	45 nm	32 nm	16 nm
$M_{1,2}$	$\frac{155}{2}$	$\frac{29.8}{0.5}$	$\frac{27.435}{0.354}$	$\frac{14}{0.18}$
$M_{3,4}$	$\frac{105}{0.4}$	$\frac{27}{0.1}$	$\frac{18.585}{0.0708}$	$\frac{9.26}{0.0352}$
M_5	$\frac{60}{1}$	$\frac{15.24}{0.25}$	$\frac{10.6}{0.177}$	$\frac{5.28}{0.0.088}$
M_6	$\frac{92.2}{10.3}$	$\frac{23.0}{2.6}$	$\frac{16.3}{1.823}$	$\frac{7.8}{0.9064}$
M_7	$\frac{5}{1}$	$\frac{1.19}{0.25}$	$\frac{0.885}{0.177}$	$\frac{0.44}{0.088}$
R_c	$4.5M\Omega$	$3.53M\Omega$	$2.5M\Omega$	$250k\Omega$
C_c	11.5 pF	1.6 pF	3 pF	1 pF

III. Analysis and Results of Simulation

The amplifier as shown in figure(2) has been designed with a capacitive load of 10pF across all the technology nodes. Input signals were designed to be small signal AC voltages with a 4mV peak to peak *sine* wave, oscillating at a frequency of 10Hz, to mimic typical biomedical signals. Figure(3) and figure(4) show the open loop bode magnitude plot and the phase plots respectively for all four technology nodes. The trend of open loop gain in a two-stage operational amplifier designed in sub-threshold operation in technology nodes of 180nm, 45nm, 32nm, and 16nm has seen a consistent improvement as technology has advanced. The open loop gain in 180nm technology node was relatively low, at 72.44dB. With the advancements in technology, the open loop gain improved in 45nm and 32nm technology nodes at 77.6dB and 75.21dB respectively. However, the open loop gain in 16nm technology node, though high at 73.42dB, is relatively unstable due to the technology file being unstable at this scale. This highlights the challenges in device scaling as technology continues to advance and the need for more robust technology files to ensure stability.

The simulation results of the phase margin and unity gain bandwidth of a 2-stage op-amp operating in the sub-threshold region have been investigated for different technology nodes as shown in figure(4). It was observed that as the technology node size decreased, the phase margin improved while the unity gain bandwidth increased. This is due to the reduction in parasitic capacitance and resistances, resulting in better high-frequency performance. Additionally, operating in the sub-threshold region resulted in lower power consumption but at the cost of reduced gain and bandwidth. The results show that the trade-off between power consumption and performance can be optimized by choosing the appropriate technology node and

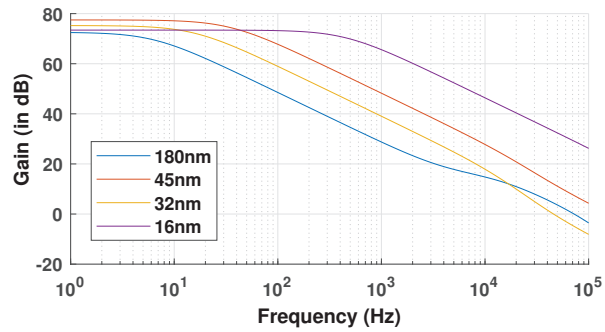

Fig. 3. Comparison of Gain across all technology nodes

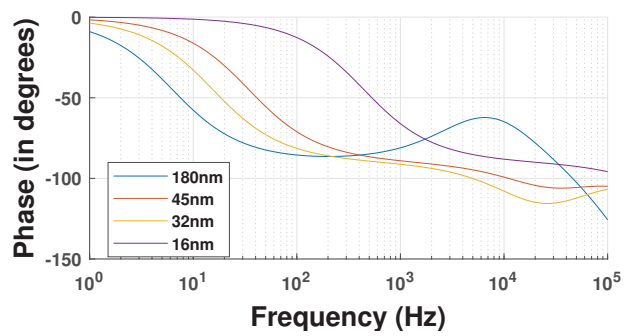

Fig. 4. Comparison of Phase across all technology nodes

operating point. The maximum phase margin and unity-gain bandwidth were both provided by the 16nm technology at 75° and 1.266MHz respectively. However, these results were seen only with a compromise on the power consumption of the circuit. A comparative study on the results of the simulations has been done across all four technology nodes and the result have been tabulated as shown in table IV.

TABLE IV
SIMULATION RESULTS

Parameter	180nm	45nm	32nm	16nm
DC Gain	$72.44dB$	$77.6dB$	$75.21dB$	$73.42dB$
Phase Margin	$65.62°$	$73.1°$	$67°$	$75°$
V_{dd}	$0.5V$	$0.5V$	$0.5V$	$0.7V$
Power Cons.	$97.578nW$	$170nW$	$106nW$	$1.83\mu W$
Slew Rate	$13.82mV/\mu s$	$4.78mV/\mu s$	$2.87mV/\mu s$	$109.7mV/\mu s$
UGB	$72.66kHz$	$160.5kHz$	$45.86kHz$	$1.266MHz$
C_L	$10pF$	$10pF$	$10pF$	$10pF$

It can be seen that the operational amplifier designed and optimized in 32nm technology provides the best overall performance in terms of power consumed, voltage gain, and stability of the circuit in terms of phase margin. Table V shows the comparative analysis performed between the proposed amplifier and the alternative operational amplifiers seen in the existing literature.

IV. Conclusion

In this paper, the design methodology for an ultra-low power, high gain sub-threshold operational amplifier has been

Authorized licensed use limited to: Zhejiang University. Downloaded on December 23,2025 at 07:06:50 UTC from IEEE Xplore. Restrictions apply.

proposed. The discussed operational amplifier operates on a supply voltage of 0.5V across the 180nm, 45nm, 32nm, and 16nm technology nodes. Frequency compensation techniques to improve the stability and operation frequency of the amplifier were also discussed. The amplifier designed in 16nm technology showed the best results in terms of unity gain bandwidth(1.266MHz) and phase margin(75°), while the amplifier displayed the highest gain in the 45nm technology at 77.6dB. The proposed design shows adequate measures of gain, gain-bandwidth product, and phase margin in order to meet the requirement shown by typical biomedical devices for stable operation. Compared to other similar works, the proposed design shows improvements in unity-gain bandwidth and gain(above 70dB). Based on the analysis of the technology nodes and comparison with other topologies present in literature, it can be observed that the 32nm designed operational amplifier is the most ideal for biomedical applications due to its combination of low power consumption and high performance. In biomedical applications, low power consumption is crucial to minimize battery consumption and heat dissipation in implantable devices. At the same time, high performance is necessary to accurately amplify signals from biological sources. The 32nm technology node strikes the perfect balance between these two factors, making it the most suitable choice for biomedical applications.

TABLE V
COMPARISON TABLE

Parameter	Ref [7]	Ref [8]	Ref [12]	Ref [16]	Our work(180 nm)	Our work(45 nm)	Our work(32 nm)	Our work(16 nm)
Gain (dB)	70	45	40	69.4	72.44	77.6	75.21	73.42
Phase Margin()	55	-	72	65.1	65.62	73.1	67	75
Power Cons. (uW)	0.075	6.25	0.112	0.548	0.09757	0.171	0.1068	1.83
Slew Rate	3	-	5	14.6	13.82	4.78	2.87	109.77
Vdd(V)	0.5	1.8	0.8	0.6	0.5	0.5	0.5	0.7
UGB(kHz)	18	2.9	114	11.35	72.66	160.52	45.86	1266
Technology(nm)	180	180	180	350	180	45	32	16

REFERENCES

[1] Behzad Razavi, ”Design of Analog CMOS Integrated Circuits”, Tata McGraw Hill, 2002

[2] S. Nitundil, N. Singh, R. Balaji and P. Arora, ”Design and Comparative analysis of a Two-Stage Ultra-Low-Power Subthreshold Operational Amplifier in 180nm, 90nm, and 45nm technology,” 2021 Devices for Integrated Circuit (DevIC), Kalyani, India, 2021, pp. 36-40, doi: 10.1109/DevIC50843.2021.9455791.

[3] G. De Vita and G. Iannaccone, ”A Sub-1-V, 10 ppm/ °C, Nanopower Voltage Reference Generator,” in IEEE Journal of Solid-State Circuits, vol. 42, no. 7, pp. 1536-1542, July 2007, doi: 10.1109/JSSC.2007.899077.

[4] Webster JG. Medical Instrumentation: Application and Design (3rd edn). Wiley: New York, 1998; 259.

[5] Sanjay Singh Rajput, Ashish Singh, Ashwani K. Chandel, Rajeevan Chandel, ”Design of Low-Power High-Gain Operational Amplifier for Bio-Medical Applications”, 2016 IEEE Computer Society Annual Symposium on VLSI , Pages: 355 – 360.

[6] J. Magri, I. Grech, O. Casha, E. Gatt, and J. Micallef, ”Design of CMOS front-end circuitry for the acquisition of biopotential signals,” 2016 IEEE Int. Conf. Electron. Circuits Syst. ICECS 2016, pp. 161–164, 2017.

[7] L. Magnelli, F. A. Amoroso, F. Crupi, G. Cappuccino and G. Iannaccone, ”Design of a 75-nW 0.5-V subthreshold complementary metal-oxide-semiconductor operational amplifier”, Int. J. Circuit Theor. Appl., vol. 42, no. 9, pp. 967-977, Sep. 2014.

[8] K. Pratyusha, S. Kumar and A. Kumari, ”Low power amplifier for biopotential signal acquisition system,” 2015 International Conference on Advances in Computing, Communications and Informatics (ICACCI), Kochi, India, 2015, pp. 324-329, doi: 10.1109/ICACCI.2015.7275629.

[9] Tsividis Y. Operation and Modeling of the Transistor MOS (2nd edn). Oxford University Press: USA, 2003.

[10] Palmisano G, Palumbo G, Pennisi S. ”Design procedure for two-stage CMOS transconductance operational amplifiers: a tutorial”. Analog Integrated Circuits and Signal Processing 2001; 27:179–189.

[11] C. Yadav and S. Prasad, ”Low voltage low power sub-threshold operational amplifier in 180nm CMOS,” 2017 Third International Conference on Sensing, Signal Processing and Security (ICSSS), Chennai, 2017, pp. 35-38, doi: 10.1109/SSPS.2017.8071560. 329, 2015.

[12] Alioto M. Understanding DC behavior of subthreshold CMOS logic through closed-form analysis. IEEE Transactions on Circuits and Systems I 2010; 57(7):1597–1607.

[13] Kang, Sung-Mo, 1945-. ”CMOS Digital Integrated Circuits : Analysis and Design”. New York :McGraw-Hill, 1996.

[14] Reference Reading - University of California, Berkeley. wla.berkeley.edu/ ee40/fa03/lecture/lecture23.pdf.

[15] “Subthreshold-Conduction: Digital-CMOS-Design —— Electronics Tutorial.” Subthreshold-Conduction — Digital-CMOS-Design —— Electronics Tutorial, https://www.electronics-tutorial.net/Digital-CMOS-Design/Non-Ideal-Effects/Subthreshold-Conduction/.

[16] T. Stockstad and H. Yoshizawa, ”A 0.9-V 0.5-/spl mu/A rail-to-rail CMOS operational amplifier,” in IEEE Journal of Solid-State Circuits, vol. 37, no. 3, pp. 286-292, March 2002, doi: 10.1109/4.987079.

Authorized licensed use limited to: Zhejiang University. Downloaded on December 23,2025 at 07:06:50 UTC from IEEE Xplore. Restrictions apply.