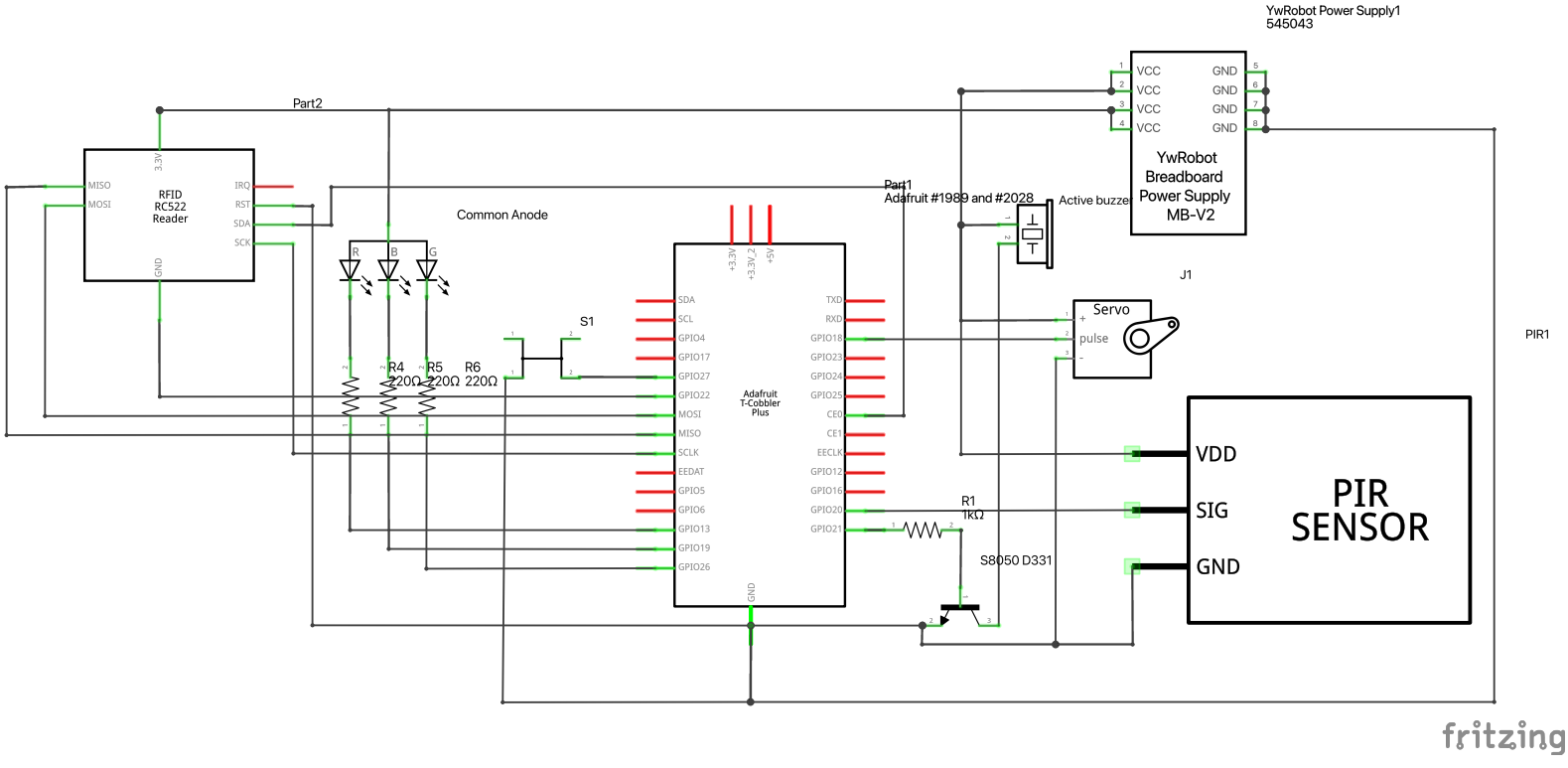
YwRobot Power Supply1
545043
VCC
VCC
VCC
VCC
GND
GND
GND
GND
YwRobot
Breadboard
Power Supply
MB-V2
Part2
3.3V
MISO
MOSI
RFID
RC522
Reader
IRQ
RST
SDA
SCK
GND
Common Anode
R
B
G
R4
220Ω
R5
220Ω
R6
220Ω
S1
Part1
Adafruit #1989 and #2028
Active buzzer
J1
Servo
pulse
+3.3V
+3.3V
+5V
SDA
SCL
GPIO4
GPIO17
GPIO27
GPIO22
MOSI
MISO
SCLK
EEDAT
GPIO5
GPIO6
GPIO13
GPIO19
GPIO26
Adafruit
T-Cobbler
Plus
TXD
RXD
GPIO18
GPIO23
GPIO24
GPIO25
CE0
CE1
EECLK
GPIO12
GPIO16
GPIO20
GPIO21
GND
R1
1kΩ
S8050 D331
PIR1
VDD
SIG
GND
PIR
SENSOR
fritzing