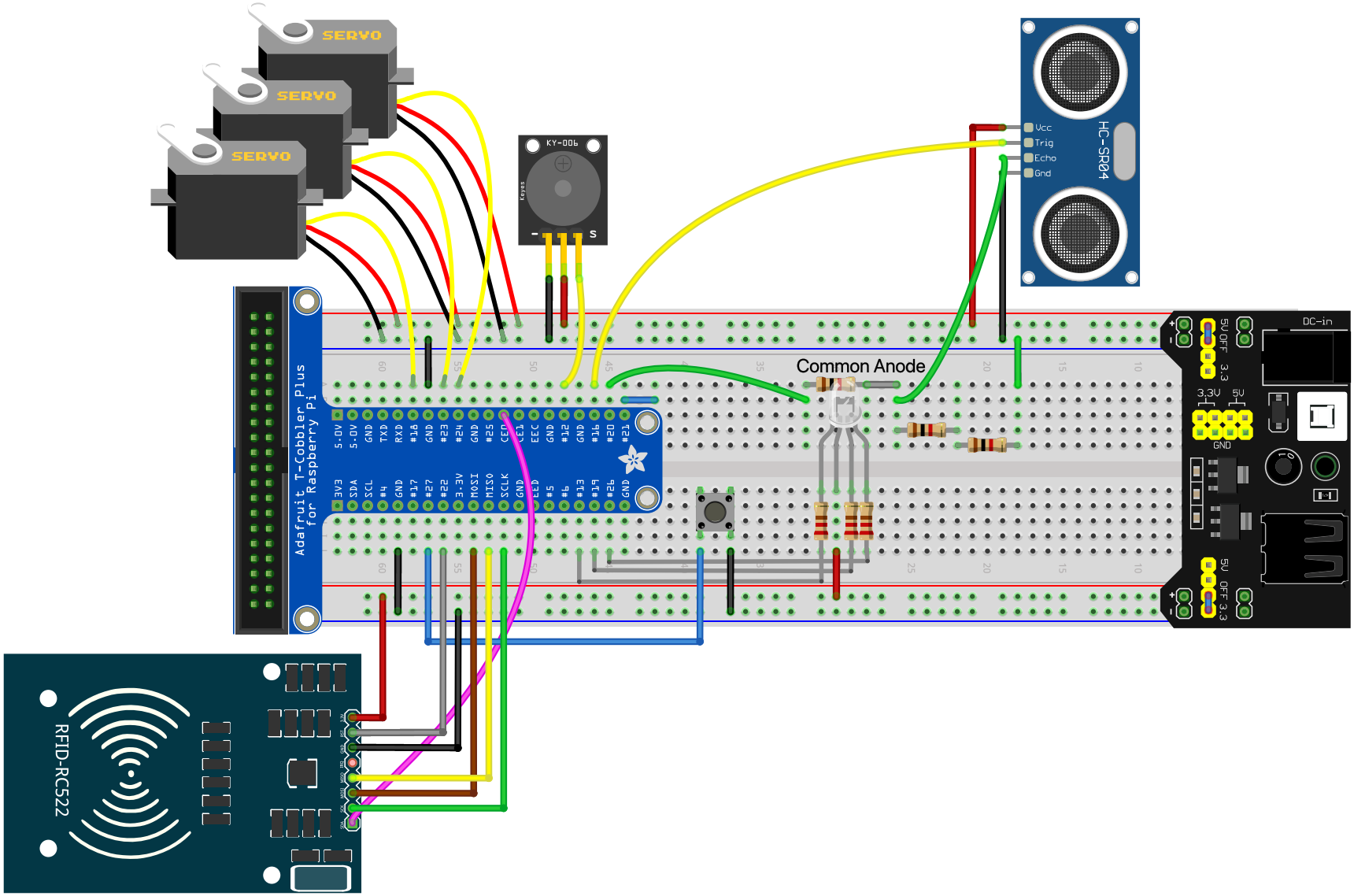
SERVO
SERVO
SERVO
KY-006
Keyes
S
HC-SR04
Vcc
Trig
Echo
Gnd
Common Anode
Adafruit T-Cobbler Plus
for Raspberry Pi
3V3
SDA
SCL
#4
GND
#17
#27
#22
3.3V
MOSI
MISO
SCLK
CE0
CE1
GND
#5
#6
#13
#19
#26
GND
5.0V
5.0V
GND
TXD
RXD
#18
GND
#23
#24
GND
#25
GND
#12
GND
#16
#20
#21
DC-in
5V OFF 3.3
3.3V
5V
GND
RFID-RC522
fritzing