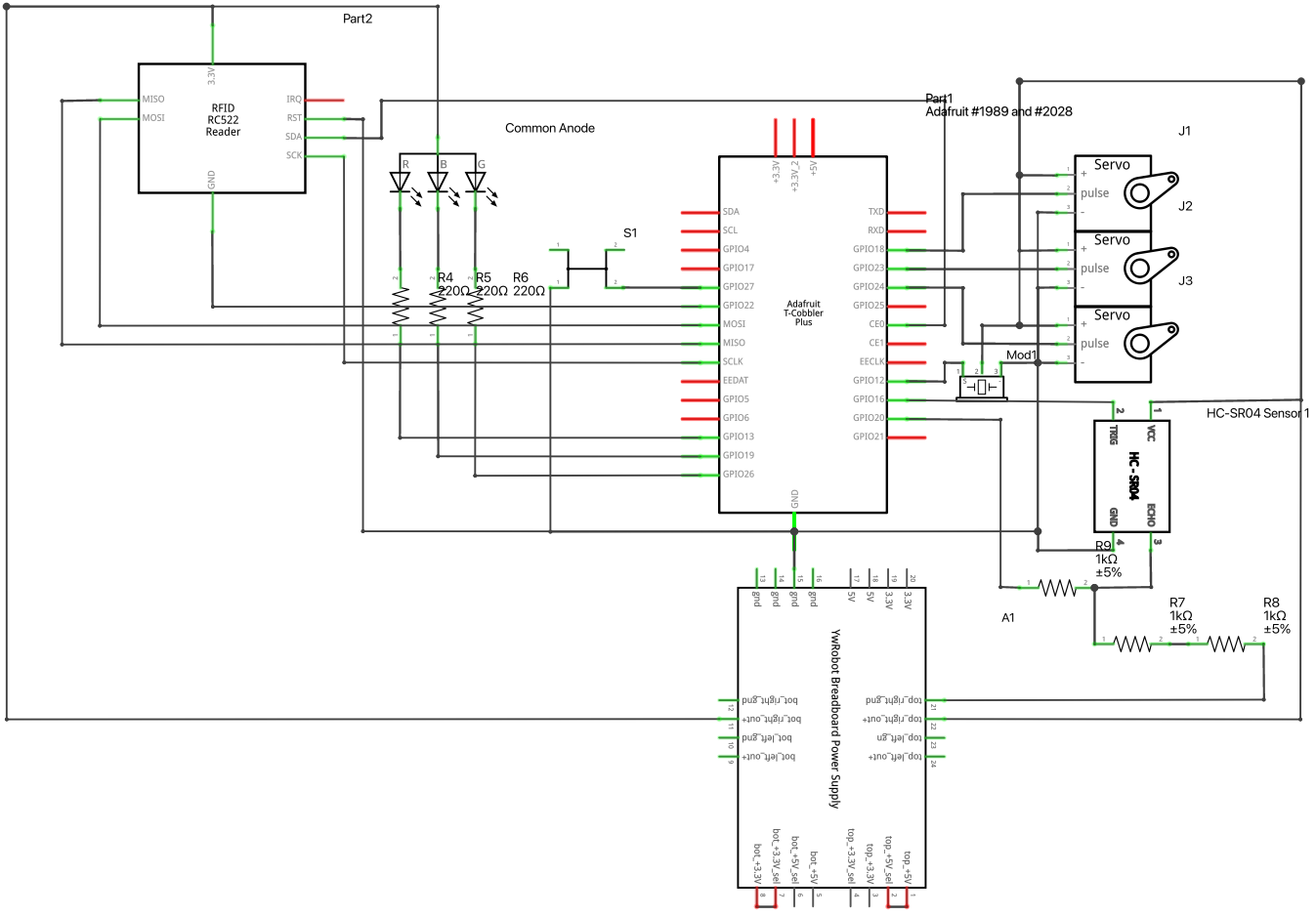
Part2
RFID
RC522
Reader
3.3V
MISO
MOSI
GND
IRQ
RST
SDA
SCK
Common Anode
R
B
G
R4
220Ω
R5
220Ω
R6
220Ω
S1
Part1
Adafruit #1989 and #2028
Adafruit
T-Cobbler
Plus
+3.3V
+3.3V_2
+5V
SDA
SCL
GPIO4
GPIO17
GPIO27
GPIO22
MOSI
MISO
SCLK
EEDAT
GPIO5
GPIO6
GPIO13
GPIO19
GPIO26
TXD
RXD
GPIO18
GPIO23
GPIO24
GPIO25
CE0
CE1
EECLK
GPIO12
GPIO16
GPIO20
GPIO21
GND
J1
Servo
pulse
J2
J3
Mod1
HC-SR04 Sensor 1
HC-SR04
VCC
TRIG
ECHO
GND
R9
1kΩ
±5%
A1
R7
1kΩ
±5%
R8
1kΩ
±5%
Ywkobot Breadboard Power Supply
gnd
5V
3.3V
top_right_gnd
top_right_out+
top_left_gn
top_left_out+
bot_right_gnd
bot_right_out+
bot_left_gnd
bot_left_out+
top_+5V_sel
top_+3.3V_sel
top_+5V
top_+3.3V
bot_+5V_sel
bot_+3.3V_sel
bot_+5V
bot_+3.3V

fritzing