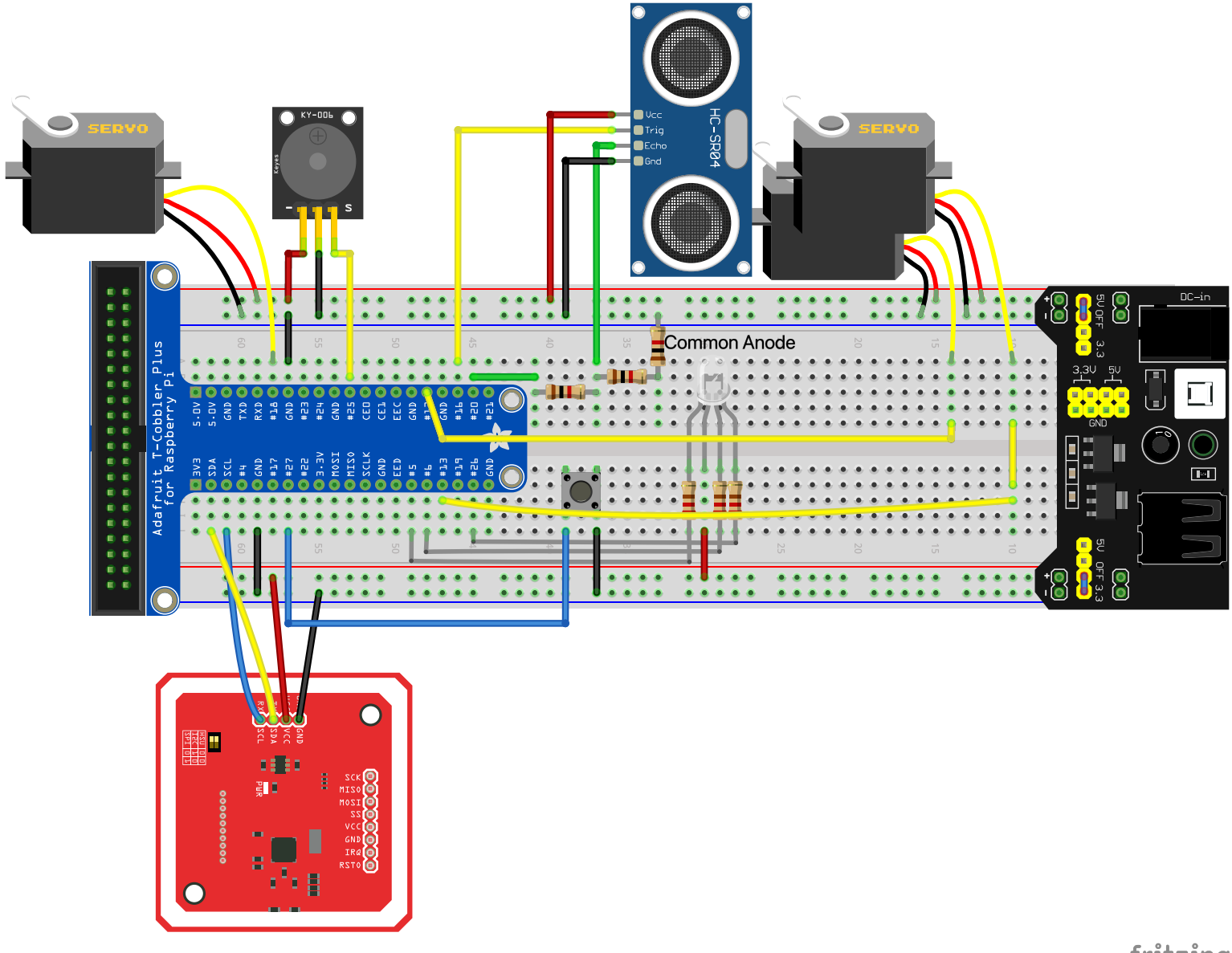
SERVO
KY-006
Keyes
S
Vcc
Trig
Echo
Gnd
HC-SR04
SERVO
Common Anode
Adafruit T-Cobbler Plus
for Raspberry Pi
5.0V
5.0V
GND
TXD
RXD
#18
GND
#23
#24
GND
#25
CE0
CE1
GND
EED
EED
GND
#6
GND
#16
#20
#21
3V3
SDA
SCL
#4
GND
#17
#27
#22
3.3V
MOSI
MISO
SCLK
GND
#5
#6
#13
#19
#26
GND
DC-in
5V OFF 3.3
3.3V
5V
GND
5V OFF 3.3
RXD
TXD
SCL
SDA
VCC
GND
PWR
SCK
MISO
MOSI
SS
VCC
GND
IRQ
RSTO
fritzing