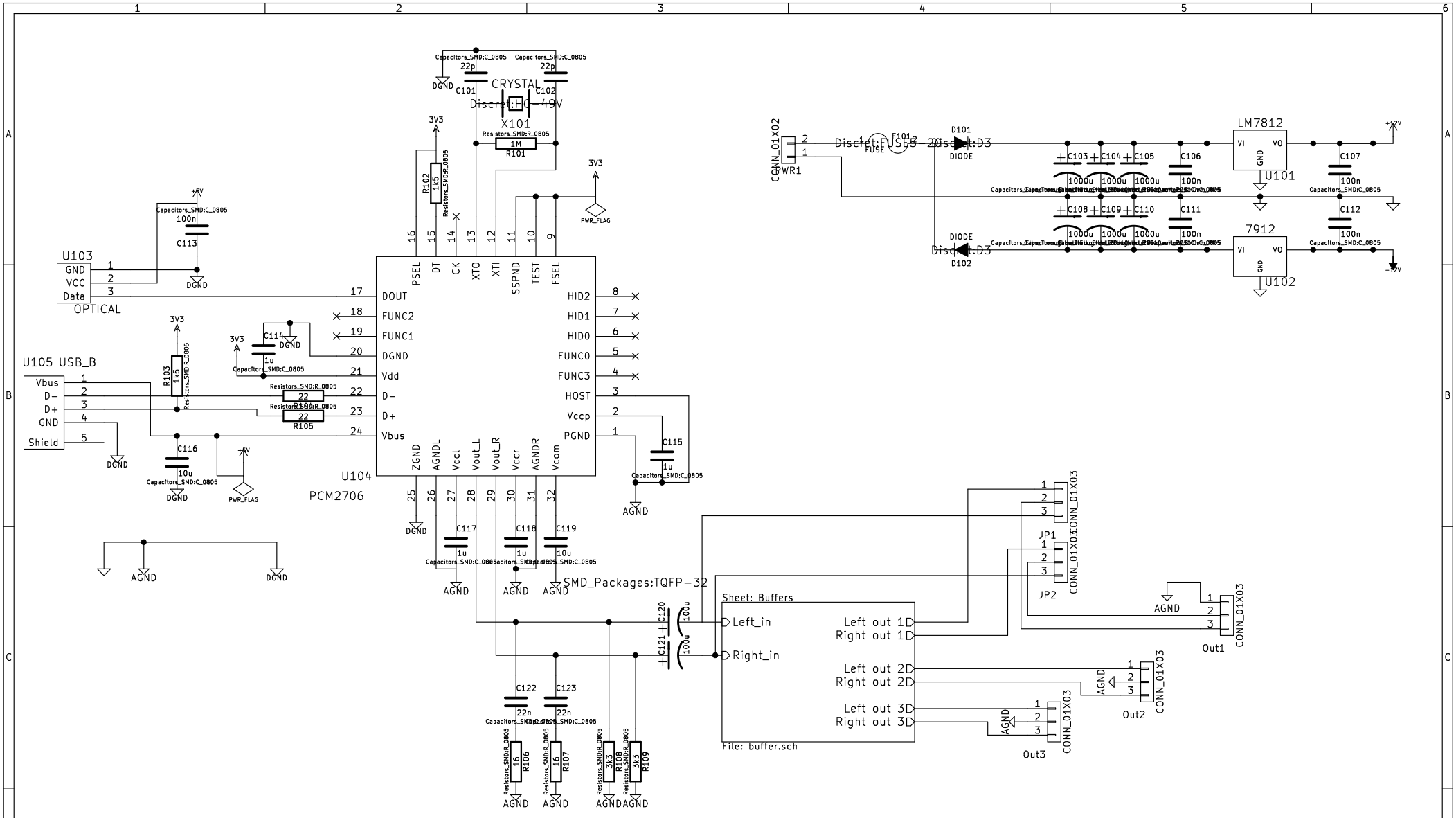
U103
GND
VCC
Data
OPTICAL
U105 USB_B
Vbus
D-
D+
GND
Shield
U104
PCM2706
DOUT
FUNC2
FUNC1
DGND
Vdd
D-
D+
Vbus
PSEL
DT
CK
XTO
XTI
SSPND
TEST
FSEL
HID2
HID1
HID0
FUNC0
FUNC3
HOST
Vccp
PGND
ZGND
AGNDL
Vccl
Vout_L
Vout_R
Vccr
AGNDR
Vcom
CRYSTAL
X101
SMD_Packages:TQFP-32
Sheet: Buffers
Left_in
Right_in
Left out 1
Right out 1
Left out 2
Right out 2
Left out 3
Right out 3
File: buffer.sch
CONN_01X02
PWR1
LM7812
U101
7912
U102
JP1
JP2
Out1
Out2
Out3
CONN_01X03
Sheet: /
File: dac.sch
Title:
Size: A4
Date: 22 dec 2014
Rev:
KiCad E.D.A. kicad 4.0.0-rc2-stable
Id: 1/2

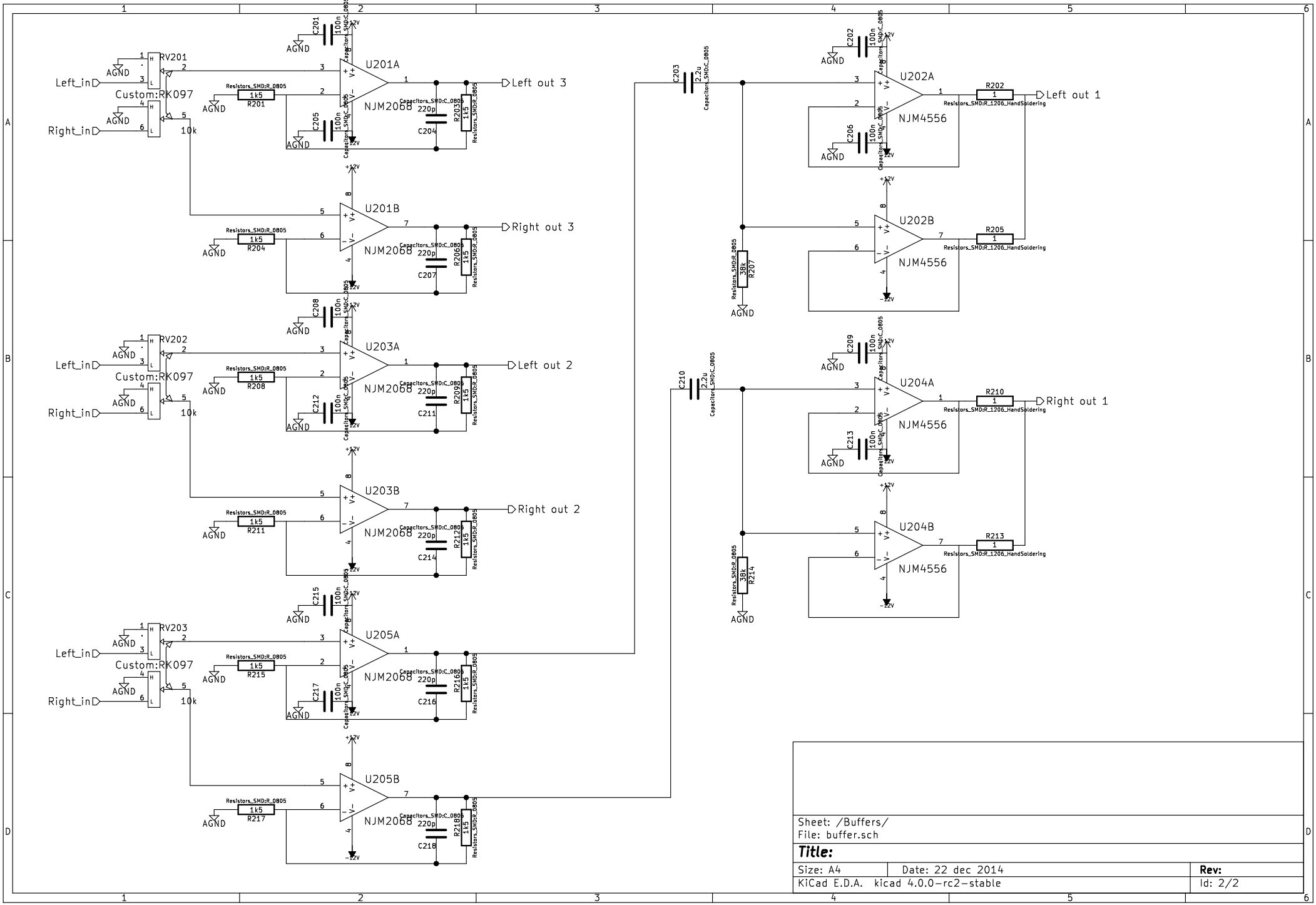
RV201
Custom:RK097
Left_in
Right_in
10k
AGND
U201A
U201B
NJM2068
Left out 3
Right out 3
RV202
U203A
U203B
Left out 2
Right out 2
RV203
U205A
U205B
C203
2.2u
C210
2.2u
U202A
U202B
NJM4556
Left out 1
U204A
U204B
Right out 1
R207
38k
R214
38k
Sheet: /Buffers/
File: buffer.sch
Title:
Size: A4
Date: 22 dec 2014
Rev:
KiCad E.D.A. kicad 4.0.0-rc2-stable
Id: 2/2