ECE 445

Spring 2026
Senior Design Design Document

Two-Wheel Differential Drive Ant-Weight Battlebot

Haoru Li, Ziheng Qi, Ziyi Wang
Team No. 12

TA: Zhuoer Zhang

February 2026

Contents

1 Introduction **4**
1.1 Problem . . . 4
1.2 Solution . . . 4
1.3 Visual Aid . . . 5
1.4 High-Level Requirements . . . 5

2 Design **6**
2.1 Block Diagram . . . 6
2.2 Physical Design . . . 7
2.3 Control Subsystem . . . 7
2.3.1 Description . . . 7
2.3.2 Hardware . . . 7
2.3.3 Software . . . 8
2.3.4 Requirements and Verification . . . 9
2.4 Drive Subsystem . . . 9
2.4.1 Description . . . 9
2.4.2 Component Selection . . . 9
2.4.3 Requirements and Verification . . . 10
2.5 Weapon Subsystem . . . 10
2.5.1 Description . . . 10
2.5.2 Component Selection . . . 10
2.5.3 Requirements and Verification . . . 11
2.6 Power Subsystem . . . 11
2.6.1 Description . . . 11
2.6.2 Component Selection . . . 11
2.6.3 Power Budget . . . 12
2.6.4 Requirements and Verification . . . 12
2.7 Structure Subsystem . . . 12
2.7.1 Description . . . 12
2.7.2 Materials . . . 13
2.7.3 Requirements and Verification . . . 13
2.8 Stability & Recovery Subsystem . . . 13
2.8.1 Description . . . 13
2.8.2 Requirements and Verification . . . 14
2.9 Tolerance Analysis . . . 14
2.9.1 Weapon System . . . 14
2.9.2 Power System . . . 14

3 Cost and Schedule **15**
3.1 Cost Analysis . . . 15
3.1.1 Labor . . . 15
3.1.2 Parts . . . 15
3.2 Schedule . . . 16

4 Ethics and Safety **16**
4.1 Societal Impact 16
4.2 Engineering Standards 17
4.3 Ethics 17
4.4 Safety 17
4.4.1 Competition Safety Requirements 17
4.4.2 Operational Safety Procedures 18
4.4.3 Electrical Safety 18

1 Introduction

1.1 Problem

Ant-weight combat robots (under 2 lbs) face strict constraints: 3D-printed thermoplastic construction, wireless control, and a maximum 4S LiPo battery. Every gram allocated to weapons reduces structural or battery budget, making the trade-off between mobility, offensive capability, and electrical reliability the central design challenge. Under competition rules, losing mobility for more than 10 seconds results in knockout.

1.2 Solution

We propose a two-wheel differential drive robot with a horizontal drum spinner and dual front wedges. The two-wheel layout reduces weight and mechanical complexity while enabling zero-radius turns. Front wedges serve as tertiary support points and scoop opponents upward into the drum's impact zone. The chassis uses symmetric top/bottom geometry with wheels extending beyond chassis height so the robot remains mobile when inverted.

The electrical system is built around an ESP32-S3 microcontroller, which handles Bluetooth control, generates PWM signals for all three ESCs, and reads an MPU-6050 IMU for an experimental gyroscopic stabilization feature. Power is distributed on two decoupled rails (14.8V motor rail, 5V logic rail) to isolate weapon transients from logic circuits. A communication watchdog shuts down all motors within 2 seconds of signal loss.

1.3 Visual Aid

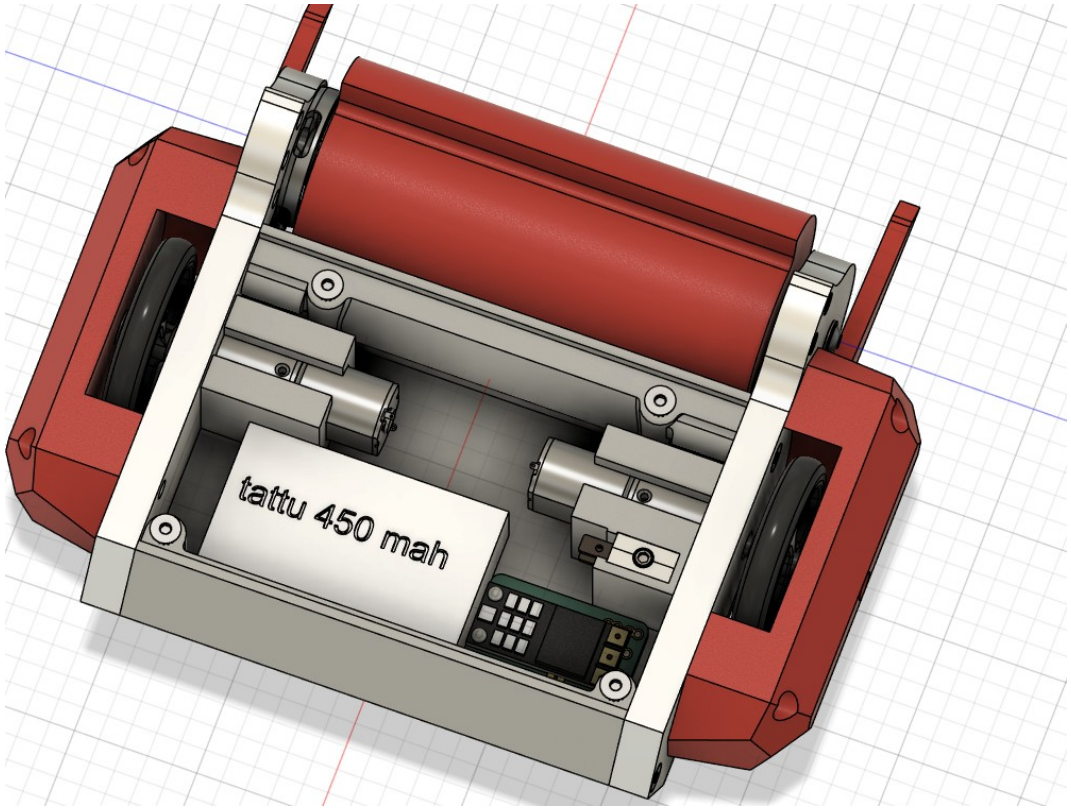

Figure 1: Concept CAD showing the two-wheel differential drive layout with horizontal drum weapon from UIUC DPD.

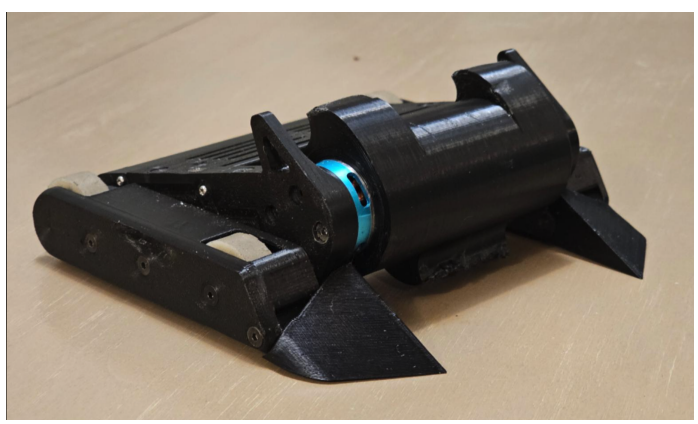

Figure 2: Reference battlebot implementation photo showing a similar horizontal drum spinner design. (Source: Reddit r/battlebots)

1.4 High-Level Requirements

1. **Mobility:** The robot must achieve a minimum linear acceleration of 1.5 m/s^2 from rest.

2. **Weapon Performance:** The horizontal drum must reach a tip speed of at least 150 mph within 10 seconds of full throttle and sustain operation for a 2-minute match duration.

3. **Stability & Safety:** The robot must maintain invertible mobility, and execute emergency shutdown within 2 seconds of signal loss or manual command. Wireless control latency must remain $\leq$ 150 ms.

2 Design

2.1 Block Diagram

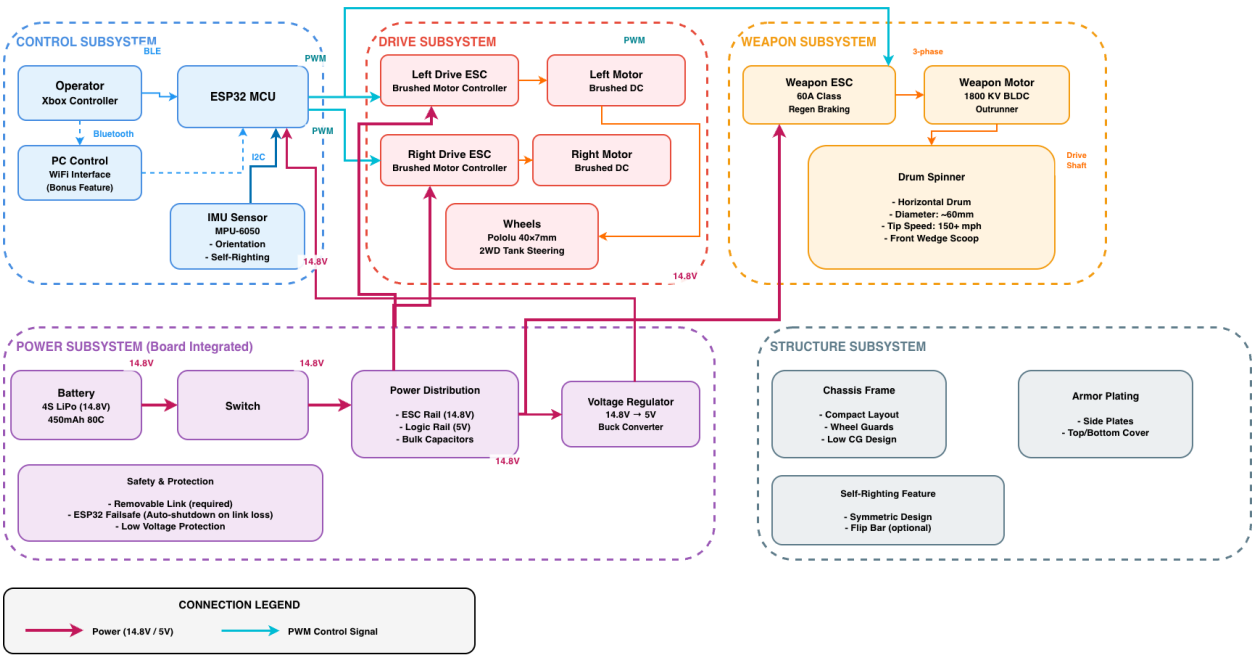

Figure 3: System block diagram showing the six subsystems and their interconnections. Red arrows indicate power lines (14.8V / 5V), dashed magenta arrows indicate PWM control signals.

The robot consists of six subsystems as shown in Figure 3. The **Control Subsystem** (ESP32-S3 MCU) receives operator commands wirelessly and generates PWM signals for all motor controllers. The **Drive Subsystem** provides differential steering through two independently-controlled brushed DC motors. The **Weapon Subsystem** drives the horizontal drum spinner via a brushless motor and dedicated ESC. The **Power Subsystem** distributes battery power through separate high-current and regulated logic rails. The **Structure Subsystem** provides the 3D-printed chassis, armor plating, and front wedges. The **Stability & Recovery Subsystem** enables invertible operation and includes the experimental gyroscopic correction feature.

2.2 Physical Design

The robot's physical layout prioritizes low center of gravity and compact packaging. The battery sits at the lowest point of the chassis, horizontally between the two drive wheels. The drum spinner is mounted at the front of the robot, with the wedges extending below and forward of the drum to scoop opponents. The custom PCB is mounted above the battery cavity. Armor panels enclose the sides and top/bottom with outward-angled profiles to deflect impacts.

Key physical design parameters:

- Total weight budget: < 2.0 lbs (907 g) including battery
- Estimated wheelbase: $w \approx 100$–130 mm
- Estimated wheel diameter: $d_w \approx 40$ mm
- Estimated chassis height: $h_c \approx 35$ mm
- Drum diameter: ≈ 60 mm
- Chassis materials: PETG for frame and armor panels

2.3 Control Subsystem

2.3.1 Description

The control subsystem receives operator commands via Bluetooth: an Xbox controller connects directly to the ESP32-S3. The ESP32-S3 microcontroller generates PWM control signals for two drive ESCs and one weapon ESC, provides IMU-based telemetry, and implements failsafe logic to detect communication loss and trigger emergency shutdown. The ESP32-S3 was chosen for its integrated Bluetooth and WiFi, sufficient GPIO count, and FCC-certified 2.4 GHz radio, eliminating the need for a separate wireless module and saving PCB area and weight.

The ESP32-S3 also runs an experimental gyroscopic correction algorithm that modulates weapon speed in response to IMU-detected flip events. The MPU-6050 IMU communicates via I2C and provides 6-axis orientation/acceleration data.

2.3.2 Hardware

- **MCU:** ESP32-S3-WROOM module (WiFi + Bluetooth 5.0, 240 MHz dual-core, FCC-certified under Part 15 for 2.4 GHz). Used in DevKit form with onboard 3.3V LDO; the 5V logic rail feeds the DevKit's VIN pin.
- **IMU:** MPU-6050 (6-axis, I2C, gyroscope $\pm 2000°/s$, accelerometer $\pm 16g$)
- **Interfaces:** PWM output to $2\times$ drive ESCs + $1\times$ weapon ESC; I2C to IMU; $2\times$ status LEDs

Table 1: ESP32-S3 Pin Assignment

ESP32-S3 Pin	**Connection**
5V (VIN)	Power Input from 5V Buck Converter
GND	Common Ground
GPIO 1	Left Drive ESC (PWM)
GPIO 2	Right Drive ESC (PWM)
GPIO 3	Weapon ESC (PWM)
GPIO 8	MPU-6050 I2C (SDA)
GPIO 9	MPU-6050 I2C (SCL)
GPIO 10	Power Status LED (Digital Out)
GPIO 11	Wireless Link Status LED (Digital Out)

2.3.3 Software

The firmware handles the following tasks:

1. Wireless communication: receive joystick/button commands from Xbox controller via Bluetooth
2. Command mapping: translate joystick inputs to left/right motor PWM duty cycles (tank-style differential mixing)
3. Weapon control: map trigger input to weapon ESC PWM throttle
4. IMU processing: read MPU-6050, compute orientation, detect flip events
5. Gyroscopic correction: when flip detected, modulate weapon speed by 30% over 200 ms
6. Failsafe: if no valid packet received within 2 seconds, set all motor outputs to zero

2.3.4 Requirements and Verification

Table 2: Control Subsystem Requirements and Verification

Requirement	**Verification**
Bluetooth connection with end-to-end latency $\leq$ 150 ms.	1. Send timestamped commands from controller; log reception time on ESP32-S3 via serial output. 2. Compute round-trip latency over 20 trials. 3. Verify: average latency $\leq$ 150 ms.
Detect communication loss and initiate emergency shutdown (all motors to zero) within 2 seconds.	1. Establish wireless connection and run motors at moderate speed. 2. Power off the controller. 3. Measure time until PWM outputs drop to zero using oscilloscope on ESC signal pins. 4. Verify: shutdown occurs within 2 seconds.

2.4 Drive Subsystem

2.4.1 Description

Two brushed DC motors with dedicated ESCs provide differential steering. Left and right ESCs receive independent PWM signals from the ESP32-S3, enabling tank-style maneuvering with zero-radius turns. Wheels are directly coupled to motor shafts. The drive system is powered at 14.8V from the battery through the power subsystem.

2.4.2 Component Selection

- **Drive Motors:** Brushed DC gearmotors rated for 6–15V with output torque $\geq$ 50 mN·m.
- **Motor Controllers:** Fingertech tinyESC ($\sim$2 g each, PWM input, bidirectional, designed for ant-weight brushed motors).
- **Wheels:** Fingertech Snap Hubs with foam tires, $\approx$40 mm diameter.

2.4.3 Requirements and Verification

Table 3: Drive Subsystem Requirements and Verification

Requirement	**Verification**
Linear acceleration ≥ 1.5 m/s^2 from rest on flat surface.	1. Mark two points 1 m apart on flat surface. 2. Command full forward throttle from rest; record with phone camera (slow-motion). 3. Calculate acceleration from video frame analysis. 4. Verify: $a \geq 1.5$ m/s^2.
Robot can drive in both upright and inverted orientations.	1. Place robot upright, command forward drive, confirm motion. 2. Flip robot inverted, command forward drive, confirm motion. 3. Verify: robot is mobile in both orientations.

2.5 Weapon Subsystem

2.5.1 Description

The weapon is a horizontal drum spinner driven by a brushless DC outrunner motor. The weapon ESC receives PWM from the control subsystem and drives the motor with 3-phase current. The drum rotates at high speed to deliver kinetic impacts.

Front wedges, positioned below the drum, scoop opponents upward into the drum engagement zone.

2.5.2 Component Selection

- **Weapon Motor:** 2206-class 2200 KV BLDC outrunner. The tolerance analysis (Section 2.9) confirms that 2200 KV exceeds the minimum KV required for our tip speed target.
- **Weapon ESC:** 30A-class brushless ESC, standard PWM input.
- **Drum:** 3D-printed PETG, $\approx$ 60 mm diameter, estimated moment of inertia $I_d \approx 1.35 \times 10^{-5}$ kg·m^2.

2.5.3 Requirements and Verification

Table 4: Weapon Subsystem Requirements and Verification

Requirement	Verification
Tip speed $\geq$ 150 mph within 10 seconds of full throttle.	1. Secure robot in test fixture with drum free to spin. 2. Command full weapon throttle. 3. Measure drum RPM with optical tachometer at $t = 10$ s. 4. Calculate tip speed 5. Verify: $v_{tip} \geq 67$ m/s (150 mph).

2.6 Power Subsystem

2.6.1 Description

The power subsystem is built around a 4S LiPo battery (14.8V nominal, 450 mAh, $\geq$80C continuous discharge). Power distribution provides two separate rails:

- **Motor Rail (14.8V):** Direct from battery to drive ESCs and weapon ESC. No regulation; the ESCs handle the full battery voltage range (12.8V depleted to 16.8V fully charged).
- **Logic Rail (5V):** Buck converter steps 14.8V down to 5V for the ESP32-S3 DevKit module, IMU, and status LEDs. Bulk capacitors ($\geq$ 1000 μF) on this rail prevent voltage sag during weapon motor transients from propagating to the logic circuits.

A Fingertech mini power switch with removable link provides the manual power cutoff required by competition rules. A polarized XT30 connector on the battery prevents reverse polarity insertion. Two status LEDs are visible from outside: one for main power, one for active wireless connection.

2.6.2 Component Selection

- **Battery:** Gaoneng 4S 450mAh 80C/160C LiPo.
- **Buck Converter:** LM2596-5.0 module
- **Power Switch:** Fingertech mini power switch with removable link
- **Battery Connector:** Polarized XT30 connector (prevents reverse polarity)
- **Bulk Capacitors:** 1000 μF 25V electrolytic on logic rail

2.6.3 Power Budget

Table 5: Power Budget Estimates

Component	Estimated Current	Estimated Power
Drive Motors (×2)	1.5A each (continuous)	44.4 W
Weapon Motor	8A average	118.4 W
Logic (ESP32-S3, IMU, LEDs)	∼500 mA from 5V rail	2.8 W (at converter input)
Total Average	—	**165.6 W**

Battery Runtime:

$$E_{battery} = 14.8\text{V} \times 0.45\text{Ah} = 6.66 \text{ Wh}$$

$$T = \frac{6.66 \text{ Wh}}{165.6 \text{ W}} \times 60 = 2.41 \text{ minutes}$$

This represents worst-case sustained combat conditions (all motors at continuous load simultaneously). Actual matches include maneuvering periods without weapon contact and idle spinning at lower current, extending effective runtime beyond this minimum. **Peak Current Analysis:** Drive (3A each stall) + Weapon (30A transient during post-impact recovery) + Logic (0.5A) = 36.5A peak. The 80C battery provides 36A continuous capacity, so brief transient peaks are tolerable.

2.6.4 Requirements and Verification

Table 6: Power Subsystem Requirements and Verification

Requirement	Verification
Battery provides $\geq$ 2 minutes of continuous operation under typical combat loading.	1. Run robot through a simulated 2-minute match (alternating drive and weapon engagement). 2. Log battery voltage over time using a voltage divider and the ESP32-S3's ADC. 3. Verify: battery voltage remains above 12.8V (3.2V/cell) for full 2 minutes.

2.7 Structure Subsystem

2.7.1 Description

The structural subsystem provides the 3D-printed chassis frame, armor plating, wheel guards, and front wedges. The chassis is designed for compact layout with low center of gravity. The battery occupies the lowest position in the chassis. Wheel guards protect the drive motors from side impacts. The front wedges serve as both tertiary support points (three-point

contact with the two drive wheels for stability) and scooping mechanisms to lift opponents into the drum.

The chassis is designed with symmetric top/bottom geometry to enable invertible operation. Drive wheels extend beyond the maximum chassis height in both orientations, ensuring ground contact when inverted.

2.7.2 Materials

- **Chassis Frame:** PETG — good impact resistance, easy to print, reasonable stiffness
- **Armor Panels:** PETG, 3–4 mm thick.
- **Wedges:** PETG, 3–4 mm thick, integrated with the front chassis section

2.7.3 Requirements and Verification

Table 7: Structure Subsystem Requirements and Verification

Requirement	**Verification**
Total assembled weight < 2.0 lbs (907 g) including battery.	1. Weigh fully assembled robot with battery on a calibrated kitchen or lab scale. 2. Verify: total weight < 907 g.
Drive wheels extend beyond chassis height to ensure ground contact in both orientations.	1. Place assembled robot upright; confirm wheels touch ground. 2. Flip robot inverted; confirm wheels still touch ground. 3. Measure clearance Δh with calipers. Verify: $\Delta h > 0$ mm in both orientations.

2.8 Stability & Recovery Subsystem

2.8.1 Description

Flip defense relies primarily on passive geometry and invertible design. The wide wheelbase and low center of gravity provide static rollover resistance. Symmetric top/bottom chassis geometry ensures operational mobility when inverted, with drive wheels extending beyond the chassis in either orientation.

As a secondary, experimental research component, the MPU-6050 IMU monitors orientation. When a flip event is detected (pitch/roll rate > 5 rad/s), the ESP32-S3 modulates weapon motor speed to generate gyroscopic counter-torque. Theoretical analysis predicts 5–15° correction at the ant-weight scale—this subsystem serves to experimentally validate and characterize the practical limits of gyroscopic stabilization at this weight class.

2.8.2 Requirements and Verification

Table 8: Stability & Recovery Subsystem Requirements and Verification

Requirement	**Verification**
Gyroscopic correction algorithm activates when IMU detects flip motion (pitch/roll rate > 5 rad/s).	1. Mount robot on a pivot and rotate at known angular rates. 2. Log serial output from ESP32-S3 to confirm whether correction activates. 3. Verify: no activation below threshold, consistent activation above threshold.

2.9 Tolerance Analysis

2.9.1 Weapon System

We have a requirement that our maximum tip speed is at least 67 m/s (150 mph). To achieve this, we need to calculate the minimum KV rating for our motor. Our estimated weapon drum diameter is 60 mm, and our battery supply voltage is 14.8V (4S LiPo).

$$\frac{67 \text{ m/s}}{0.060 \text{ m} \cdot \pi} = 355.7 \text{ RPS} \times 60 \text{ s/min} = 21{,}345 \text{ RPM} \times \frac{1}{14.8 \text{ V}} = 1{,}442 \text{ KV}$$

Our minimum motor spec is 1,442 KV, and our chosen 2200 KV motor exceeds that, so we will be able to meet our weapon tip speed requirement.

2.9.2 Power System

One of our high-level requirements is that the robot operates continuously for at least 2 minutes. We verify this against our power budget (see Section 2.6.3):

- Drive motors: 2 motors × 1.5A × 14.8V = 44.4 W
- Weapon motor: 8A average × 14.8V = 118.4 W
- Controller subsystem: ∼500 mA from 5V rail ≈ 2.8 W (at converter input)

Total power draw: 165.6 W. Battery energy: 14.8 V × 0.45 Ah = 6.66 Wh.

$$T = \frac{6.66 \text{ Wh}}{165.6 \text{ W}} \times 60 = 2.41 \text{ minutes}$$

This worst-case estimate (all motors at sustained full load) exceeds our 2-minute requirement with 0.41 minutes of margin. In practice, intermittent weapon engagement and maneuvering periods at lower current will extend runtime further.

3 Cost and Schedule

3.1 Cost Analysis

3.1.1 Labor

Assuming an entry-level ECE salary of $40/hour for UIUC graduates:

Table 9: Labor Cost Estimate

Team Member	**Hours**	**Rate ($/hr × 2.5)**	**Total**
Haoru Li	100	$100	$10,000
Ziheng Qi	100	$100	$10,000
Ziyi Wang	100	$100	$10,000
Total Labor	300		$30,000

3.1.2 Parts

Table 10: Parts Cost Estimate

Part	**Manufacturer / Part #**	**Qty**	**Unit Cost**	**Total**
MPU-6050 Breakout	InvenSense / GY-521	1	$3	$3
Weapon Motor (BLDC 2200KV)	Racerstar BR2205	1	$12	$12
Drive Motors (×2)	Fingertech Silver Spark	2	$15	$30
Weapon ESC (30A)	Hobbywing Skywalker 40A	1	$15	$15
Drive ESCs	Fingertech tinyESC	2	$20	$40
4S 450mAh LiPo	Gaoneng	1	$15	$15
Buck Converter Module	LM2596-5.0	1	$3	$3
Power Switch	Fingertech mini	1	$5	$5
XT30 Connector	Generic	2	$1	$2
Custom Carrier Board	PCBWay, 5 pcs	5	$10	$50
3D Printing Filament (PETG)	Generic 1kg spool	1	$25	$25
Bulk Capacitors (1000μF 25V)	Generic	2	$1	$2
Status LEDs, resistors, connectors	Various	—	—	$5
Fasteners (screws, heat-set inserts)	Various	—	—	$5
Total Parts				**$212**

Grand Total: $30,000 (labor) + $212 (parts) = **$30,212**

3.2 Schedule

Table 11: Project Schedule

Week	Tasks	Assigned To
Week 1–2 (Feb 24)	Finalize design document; order all parts; begin PCB schematic	All
Week 3–4 (Mar 10)	PCB layout and fabrication order; finalize CAD; begin 3D printing	Haoru (PCB), Ziheng (CAD), Ziyi (firmware)
Week 5–6 (Mar 24)	PCB assembly and bring-up; firmware development; print chassis iterations	Haoru (PCB), Ziheng (printing), Ziyi (firmware)
Week 7 (Mar 31)	**Spring Break**	—
Week 8–9 (Apr 14)	Integrate electronics into chassis; drive and weapon motor testing	All
Week 10–11 (Apr 21)	Full system integration; wireless control testing; gyroscopic experiments	All
Week 12 (Apr 28)	Final testing; prepare mock-up demo	All
Week 13 (May 5)	**Final Demo and Presentation**	All

4 Ethics and Safety

4.1 Societal Impact

Combat robotics, while competitive in nature, makes a positive contribution to engineering education and the broader community. This project provides hands-on experience integrating mechanical design, embedded systems, power electronics, and wireless communication—core ECE competencies. The 3D-printed, open-design approach makes the technology accessible and reproducible, potentially contributing to educational outreach in STEM. The weight and material constraints (under 2 lbs, thermoplastic construction) inherently limit the destructive potential compared to larger combat robots, keeping the activity within a safe and controlled scope.

From an environmental perspective, LiPo batteries require proper disposal through campus EH&S recycling protocols. 3D-printed components will use recyclable materials where feasible, and designs will minimize material waste through iterative CAD optimization before printing.

4.2 Engineering Standards

- **FCC Part 15:** The ESP32-S3-WROOM module is FCC-certified for 2.4 GHz WiFi and Bluetooth operation, ensuring compliance with wireless communication regulations.
- **IEEE 802.11 / Bluetooth:** Wireless communication protocols follow established standards for reliable data transmission.
- **UL 2054 / IEC 62133:** LiPo battery safety standards guide our battery handling, charging, and storage procedures.
- **National Robotics Challenge (NRC) / theirc.org:** Competition rules define weight limits, material restrictions, safety switch requirements, and weapon stopping time requirements.

4.3 Ethics

Safety (IEEE Code 1.1): Combat robots pose risks if safety systems fail. Our design implements multiple protections: communication link monitoring with automatic shutdown (2 seconds), manual emergency stop via removable link, and fail-safe defaults (zero throttle on invalid input).

Honest Representation (IEEE Code 3.1): Several design aspects require component selection and empirical validation. We commit to rigorous testing before claiming the robot meets stated requirements. The gyroscopic stabilization feature is explicitly framed as experimental—tolerance analysis provides theoretical feasibility, but actual performance requires physical validation. We will report measured results honestly, even if they fall short of theoretical predictions.

Responsible Development (IEEE Code 7.8): We will follow safe development practices, testing components individually before integration and conducting weapon tests only in controlled environments with appropriate safety measures.

4.4 Safety

4.4.1 Competition Safety Requirements

- Weight: 2 lbs maximum
- Materials: 3D-printed thermoplastics (PETG)
- Battery: 4S LiPo maximum
- Control: Bluetooth via ESP32-S3
- Emergency shutdown: manual (removable link) and automatic (on link loss)
- Status LEDs for power and wireless connection visible from outside

4.4.2 Operational Safety Procedures

- All testing conducted in controlled environments (ECE lab / designated arena); no testing in public or uncontrolled spaces.
- PPE required during testing: safety glasses and closed-toe shoes.
- LiPo batteries charged only with approved balance chargers in fire-resistant bags; batteries stored at storage voltage (3.8V/cell) when not in use.
- Kill switch (removable link) must be accessible and tested before each operation.
- Weapon motor never powered on unless robot is in a test fixture or enclosed arena.
- All team members briefed on emergency shutdown procedures before each test session.

4.4.3 Electrical Safety

- Low-voltage protection: ESC low-voltage cutoff prevents battery discharge below 3.2V/cell to prevent LiPo damage and fire risk.
- Reverse polarity protection: Polarized XT30 connector prevents reverse battery insertion.
- Fuse protection: 20A slow-blow fuse on main power rail protects against short circuits.

References

[1] IEEE, "IEEE Code of Ethics," 2020. Available: https://www.ieee.org/about/corporate/governance/p7-8.html

[2] Espressif Systems, "ESP32-S3-WROOM-1 Datasheet." Available: https://www.espressif.com/sites/default/files/documentation/esp32-s3-wroom-1_wroom-1u_datasheet_en.pdf

[3] InvenSense, "MPU-6000 and MPU-6050 Product Specification." Available: https://invensense.tdk.com/wp-content/uploads/2015/02/MPU-6000-Datasheet1.pdf

[4] National Robotics Challenge, "Competition Rules and Specifications," 2026. Available: https://www.thenrc.org/

[5] Texas Instruments, "LM2596 Simple Switcher Power Converter." Available: https://www.ti.com/lit/ds/symlink/lm2596.pdf