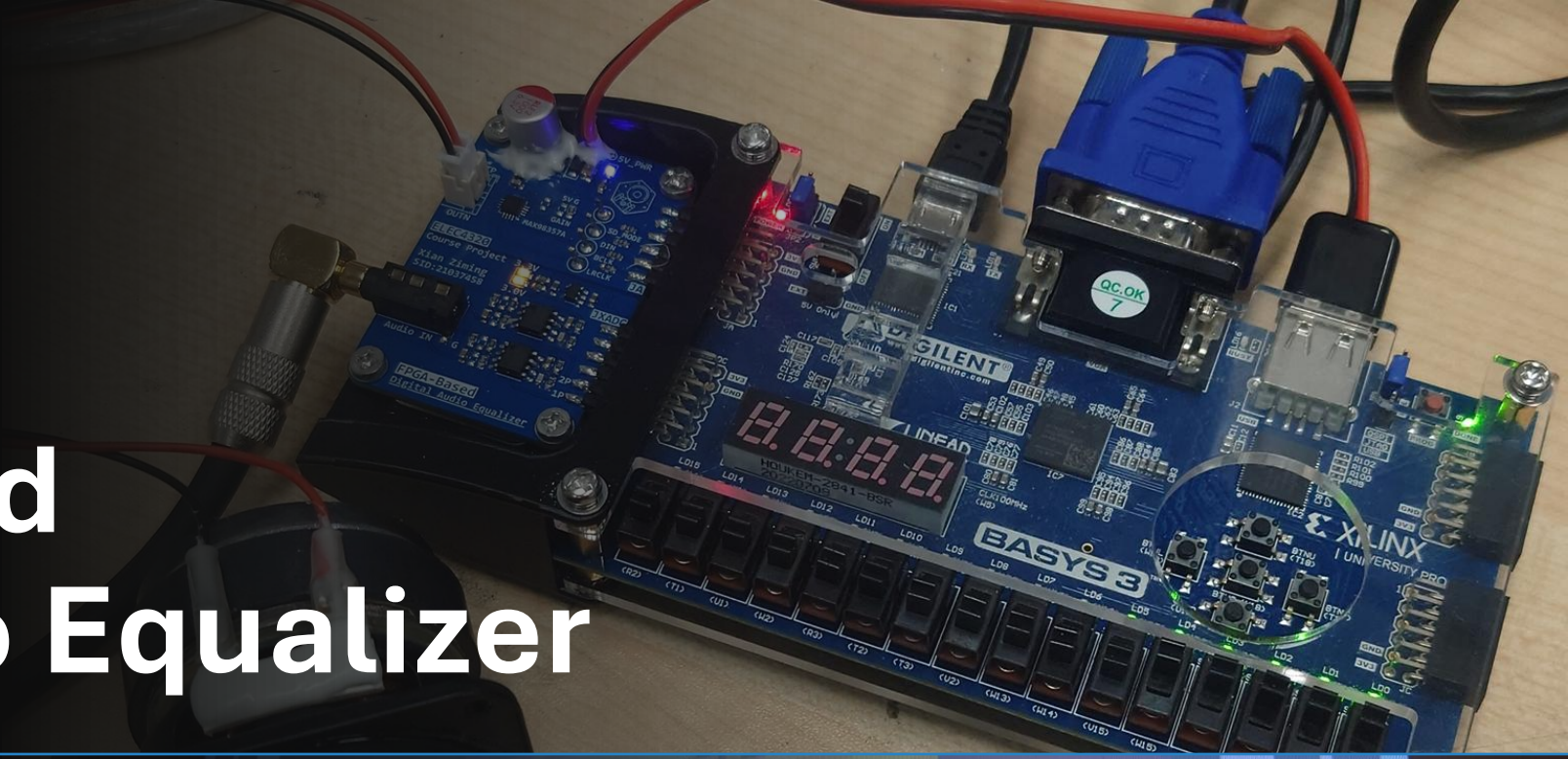

FPGA – Based Digital Audio Equalizer

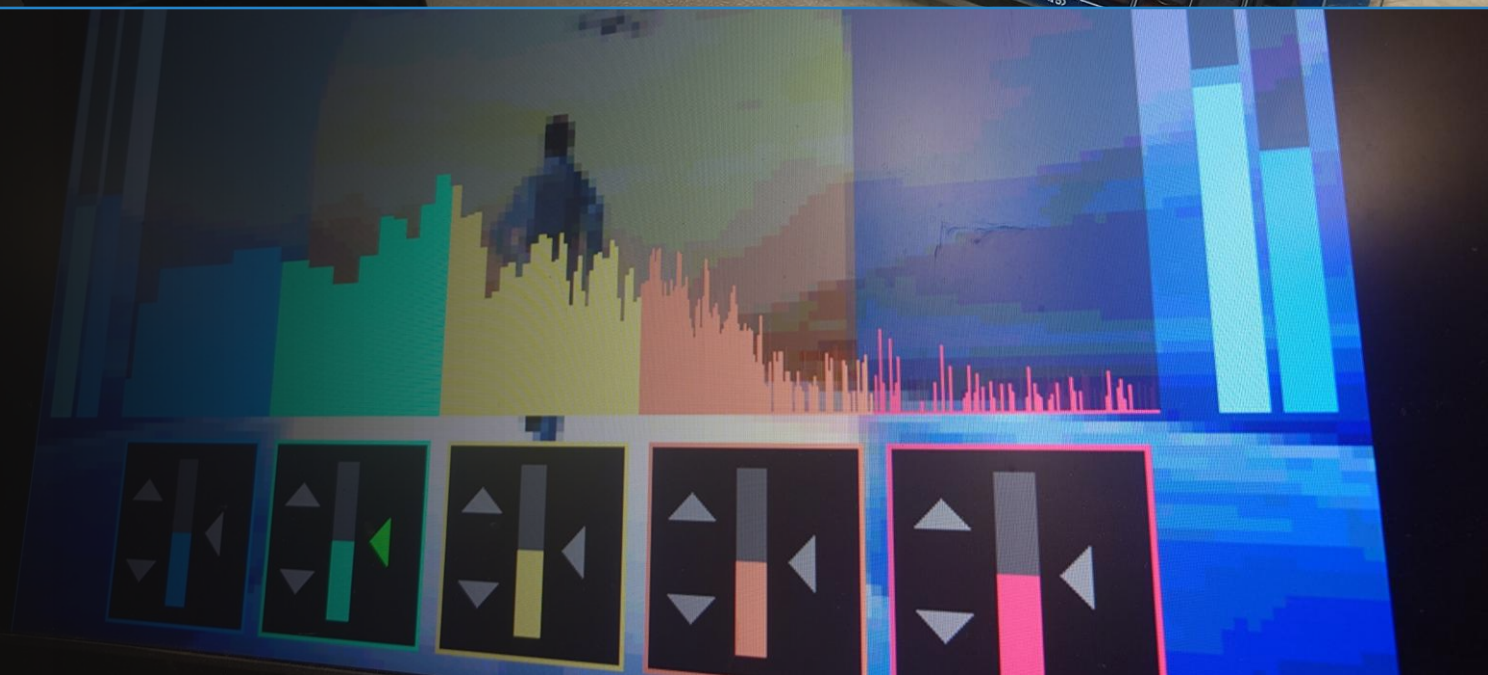

ELEC4320 Final Project Demo

Group 31

Xian Ziming

SID:

Project Overview

Audio Equalizer: Adjusting the volume of different **frequency bands** within an audio signal.

Why FPGA? (compare to audio DSP)

Parallel processing	>	High-order FIR Filter & Complex Algorithm
Stable Latency	>	Hardware Determined Sequential Logic
Reconfigurable	>	Can adjust Algorithms & Precision Freely

Hardware Structure

BASYS 3 + Extension Board

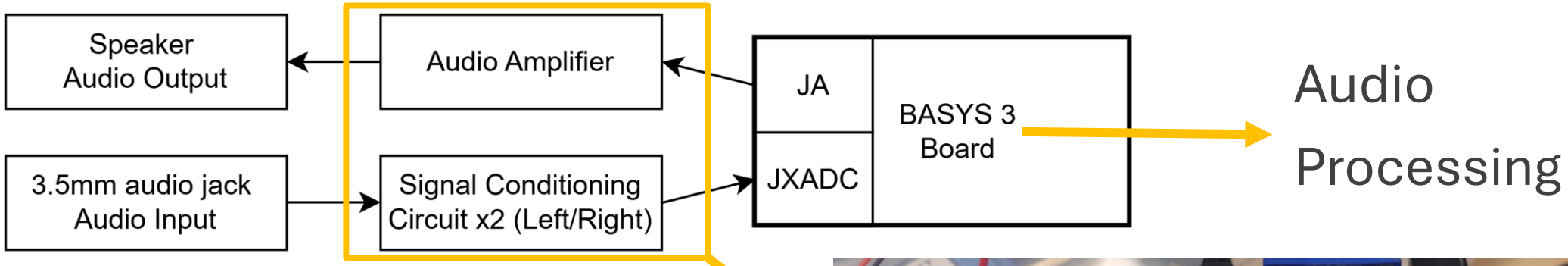

Other Interface:

VGA Display

LEDs, Buttons, Switches

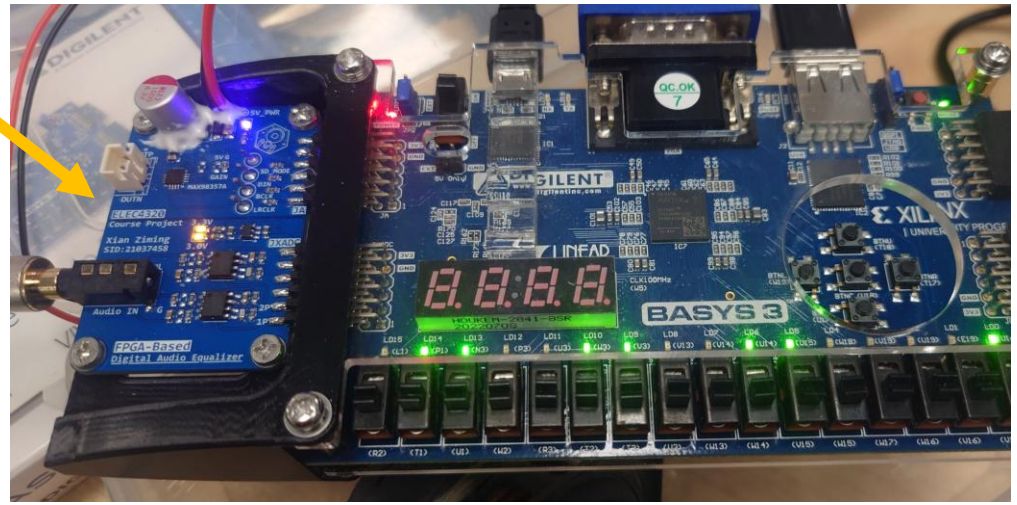

Basic Function: Audio Bypass

The input audio directly goes to the output, verify the basic signal path.

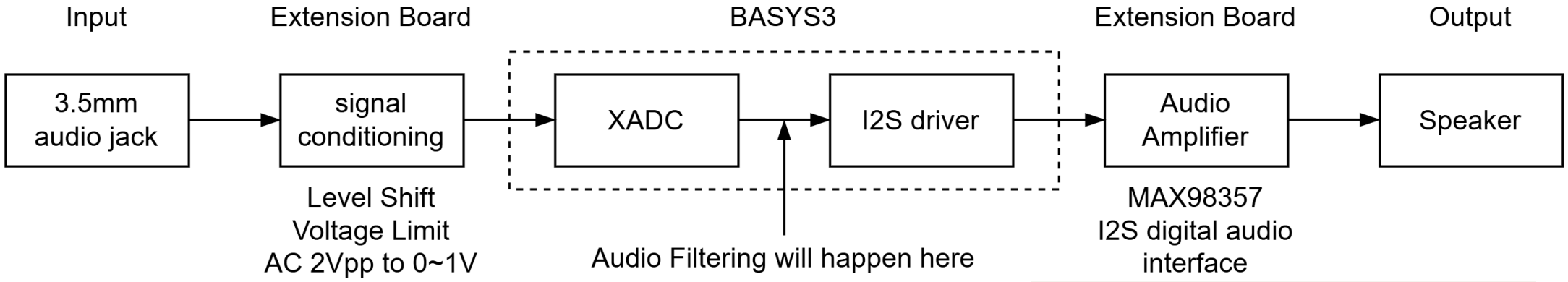

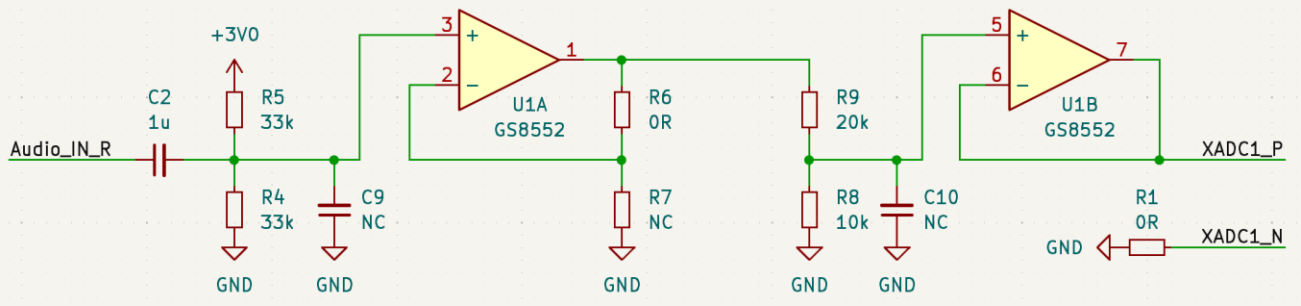

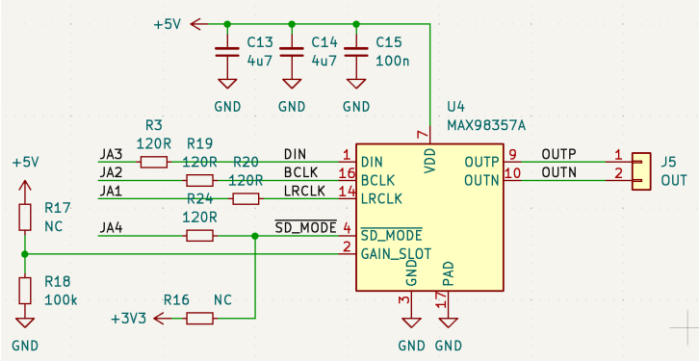

I2S & ADC

I2S:

96kHz, dual channel, 32bit

6.144Mbps, clock divided from 100MHz

LRCLK (L/R control) is also a 96kHz clock (for other modules)

ADC:

96kHz, dual channel, 12bit

Filter Structure: 5-Band Parallel FIR + Gain + LPF +HPF

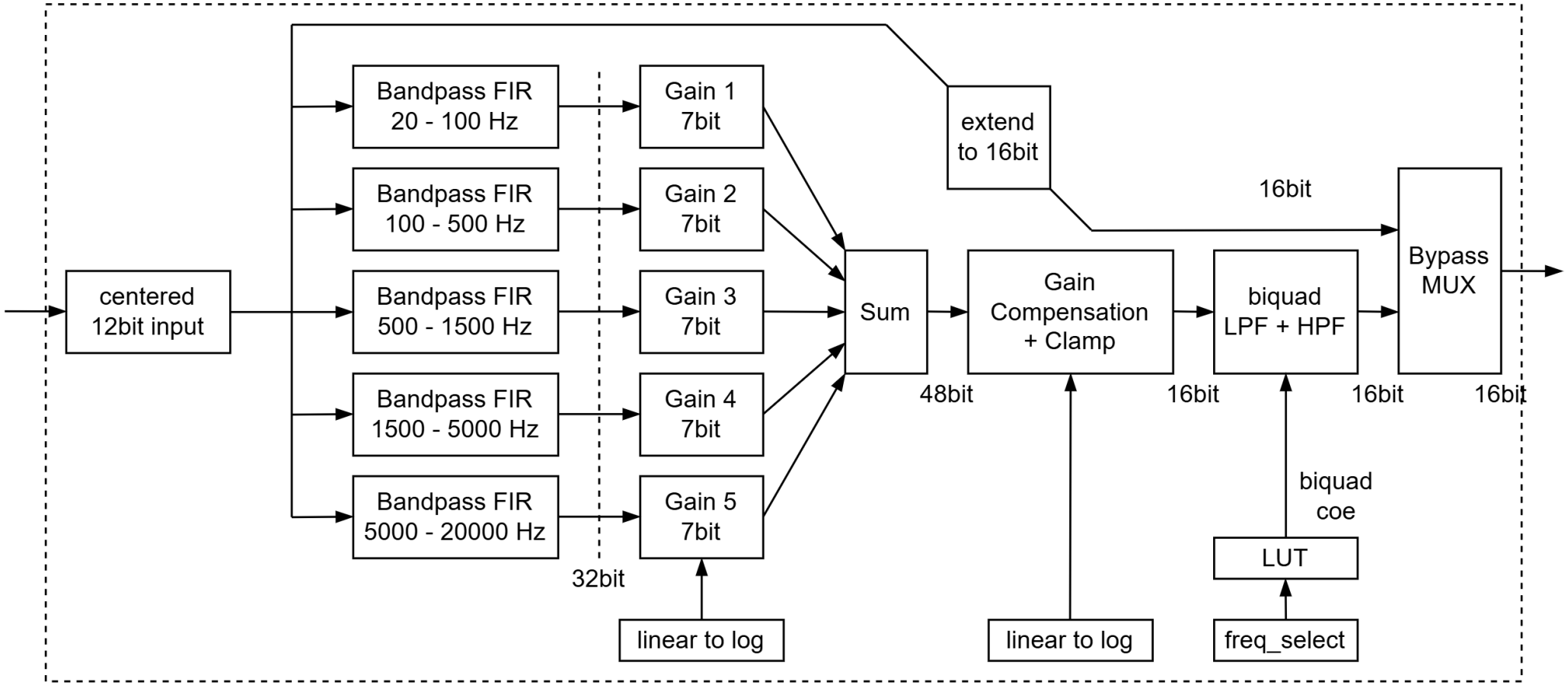

FIR Bandpass Filter

Use MATLAB to generate coefficient files, then import to FIR IP core

N = 200 for sharp stopband, coefficient width = 20 bit for audio quality

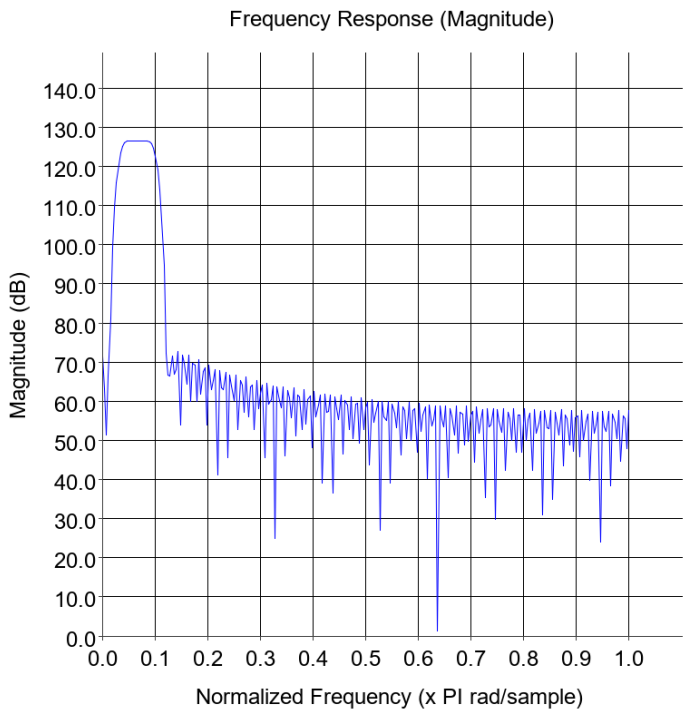

Behavior Simulation: 400Hz + 5000Hz mixed signal input. (low / high frequency pass)

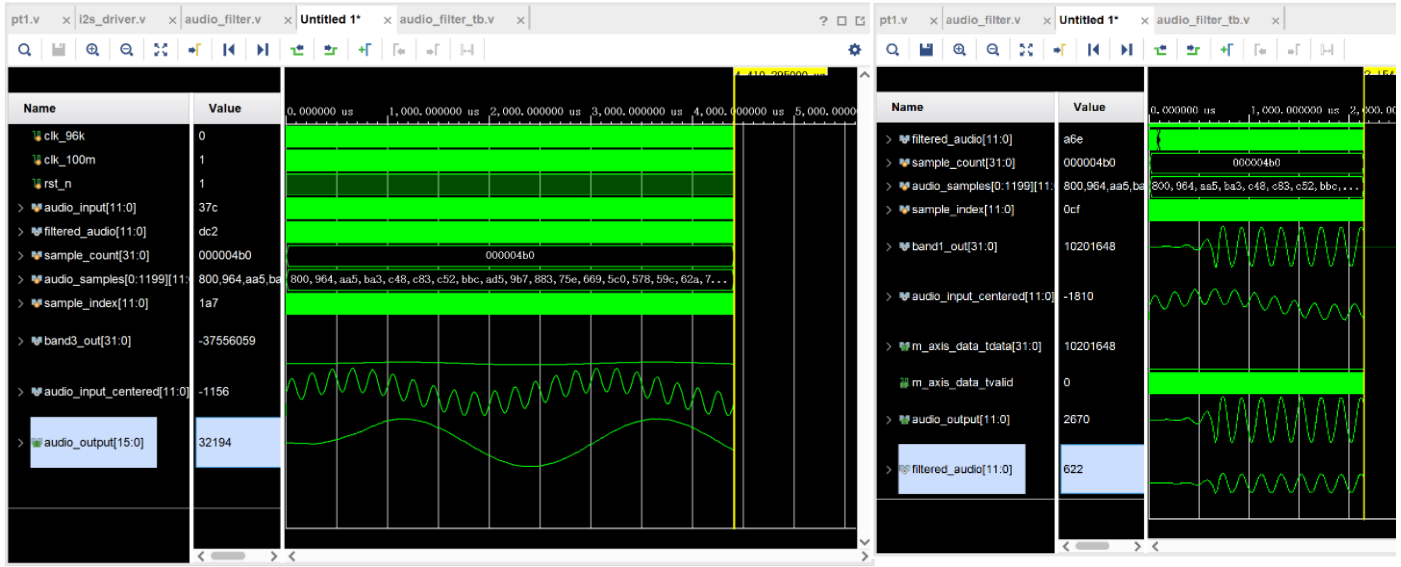

Gain Setting

Gain is controlled by multiplying a 7-bit gain value. Range from 2(-18dB) to 127(18dB), 16(0dB) ~ original gain.

This 7-bit value is controlled by a 4-bit (13 points) gain setting value.

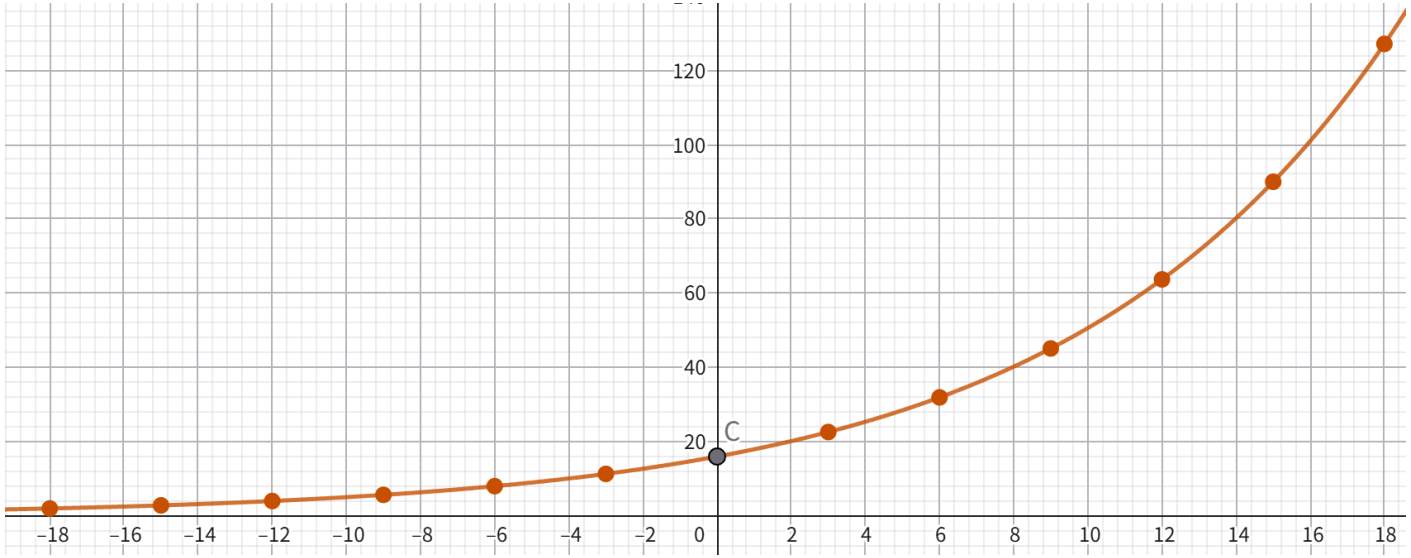

X - gain value (log)

Y - gain setting (linear)

High Pass & Low Pass Filter

Based on **biquad** filter, use MATLAB to calculate the coefficients.

Cutoff frequency can be changed by changing the pre-calculated coefficients sets

$$H(z) = \frac{b_0 + b_1 z^{-1} + b_2 z^{-2}}{1 + a_1 z^{-1} + a_2 z^{-2}}$$

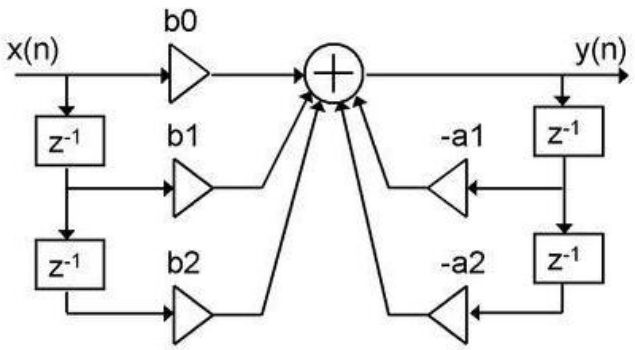

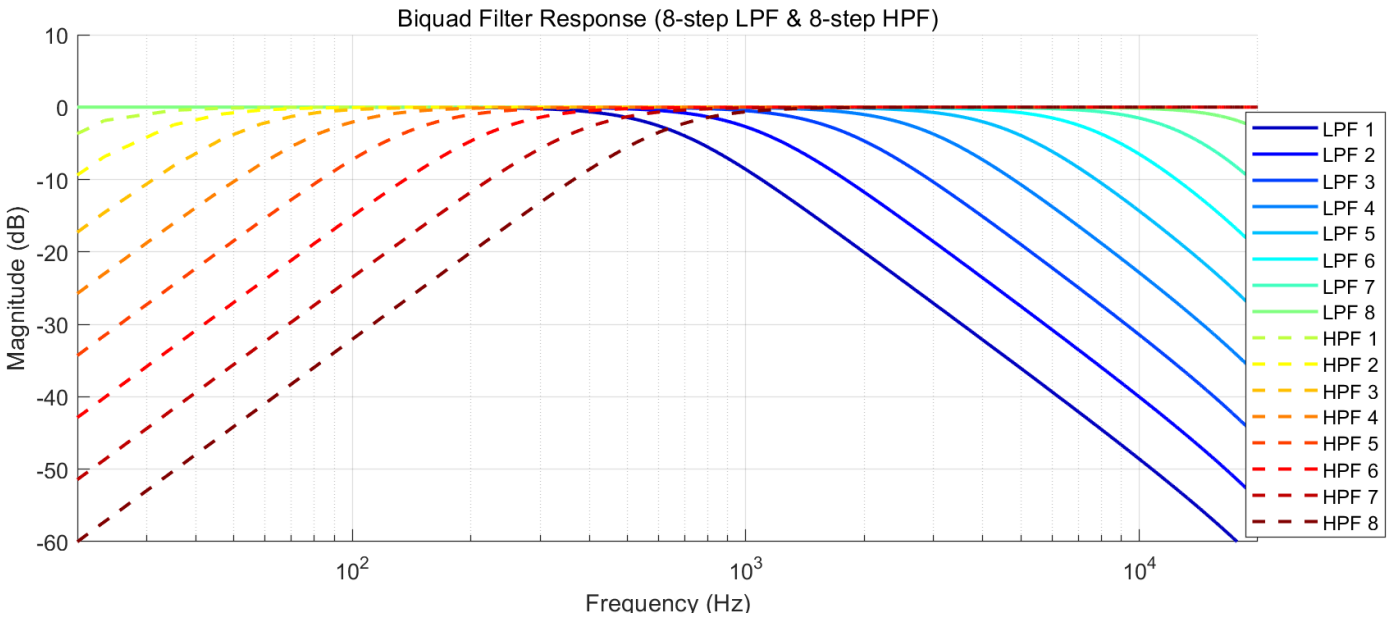

VGA Display

Displayed information:

Input / Output Audio Level (L + R)

Audio Spectrum of Input / Output

Filters / Equalizers Status (On/Off, Gain level, Cutoff Frequency)

User interface (which module is selected, adjustment feedback)

A background image stored in ROM

Very useful when debugging!

VGA Display

Overall Gain

Low Pass & High Pass Filter

Colored Edge – On

Bar – Cutoff Frequency

Input Level Bar

Left + Right, log scale

FFT Spectrum

Frequency & Gain in log scale

Output Level Bar

Left + Right, log scale

5 Band Equalizer

Colored Edge – On

Bar – Gain level

Right Arrow – Selected

Left – Adjustment Feedback

VGA Display

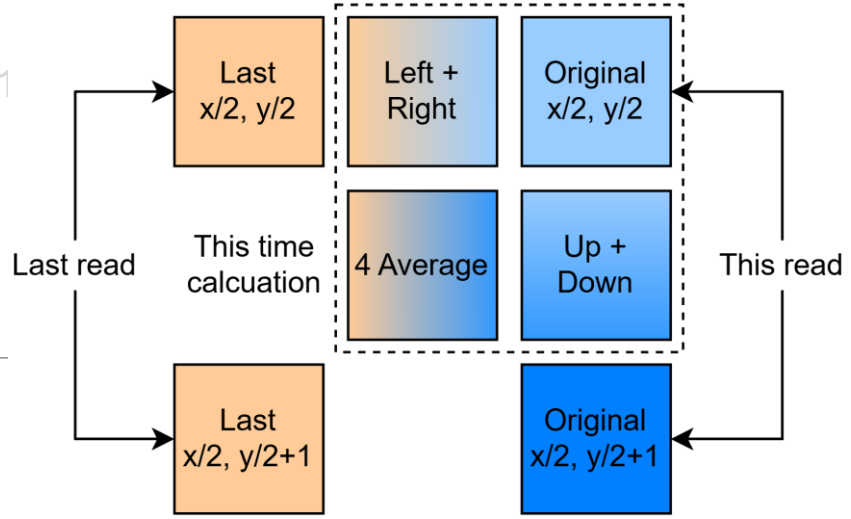

“Transparent” UI

Blend the color of UI and background. (add and >1)

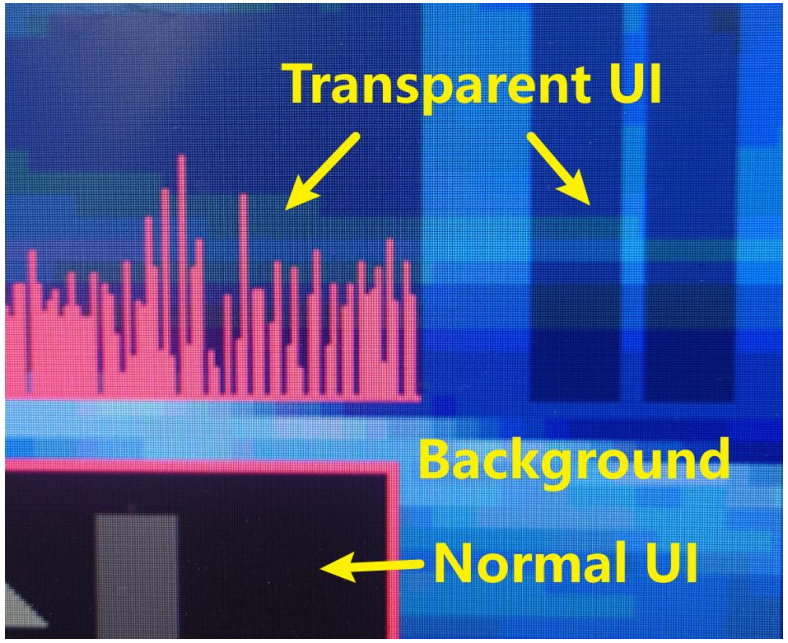

Pixel Interpolation

Due to ROM limit, only 160x120 image can be stored. Use interpolation to upscale the image to 320x240. (3/4 pixel from calculation, 1/4 from original image)

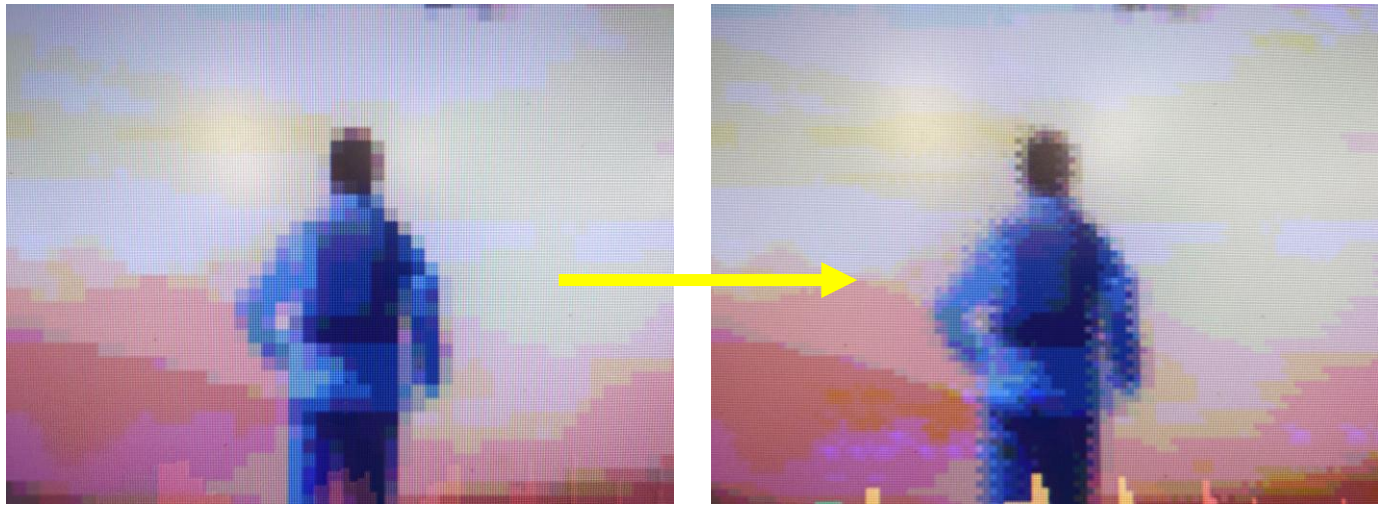

User Interface

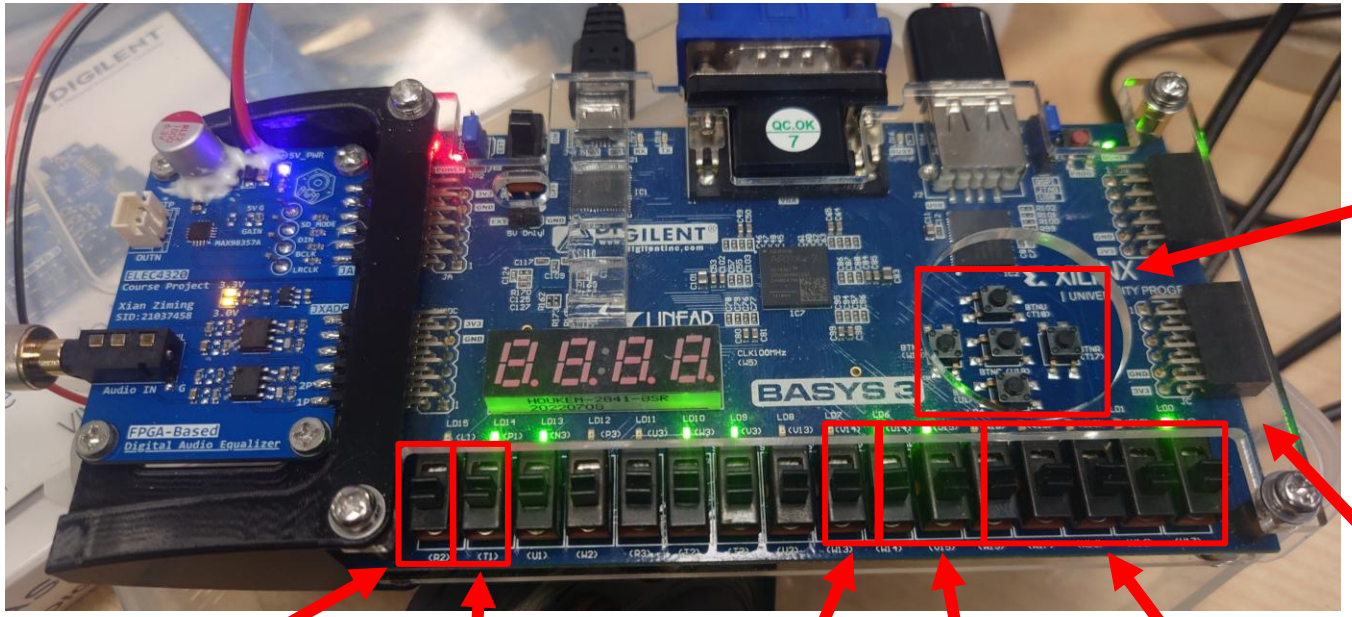

Left/Right: Select a block to adjust

Up/Down: Adjust gain or cutoff frequency

Center: Reset gain or cutoff frequency

LEDs: Output volume

All Filter Bypass

FFT Source

Gain/Filter/5-Band Bypass Switch

Shortcomings

Sample rate (96kHz now) is limited by ADC and IO slew rate

Noticeable background noise (likely from ADC)

If input level is too high, there will be broken sound (unsolved)

The high pass filter cause DC ripple to output (unsolved)

Many designs of the modules can be improved (for example, use standard data interface, rather than using register as buffer everywhere)

Thank You

Q & A