MSB Connector

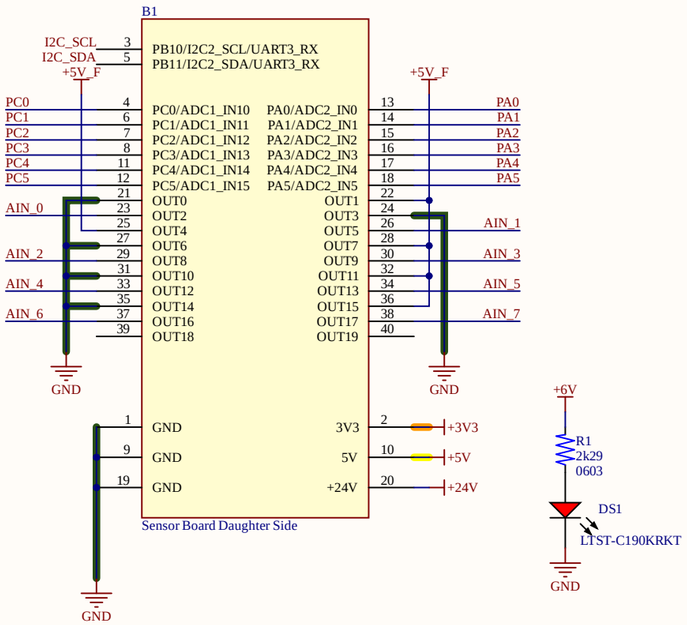

I2C ADC

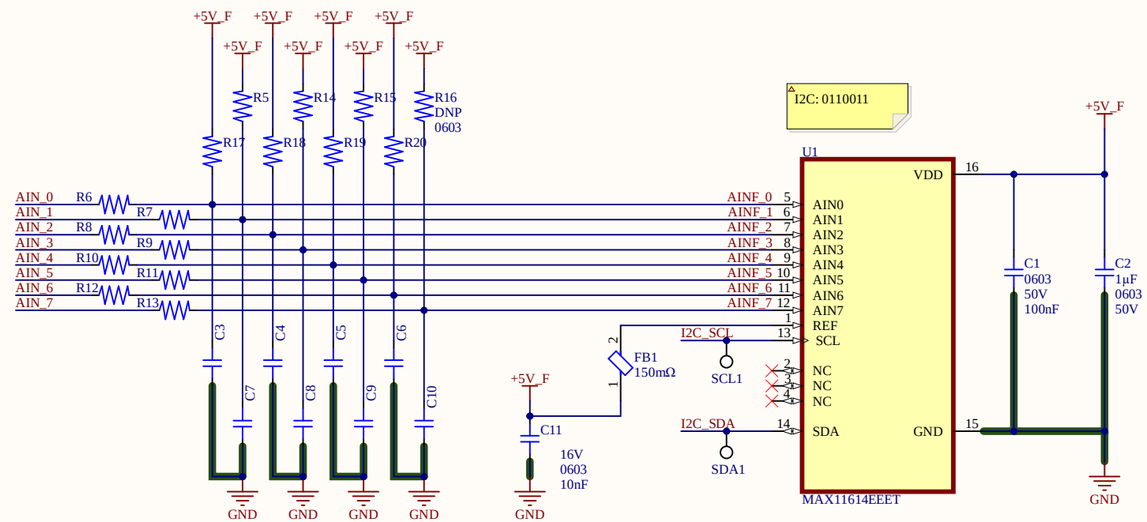

Power Staging

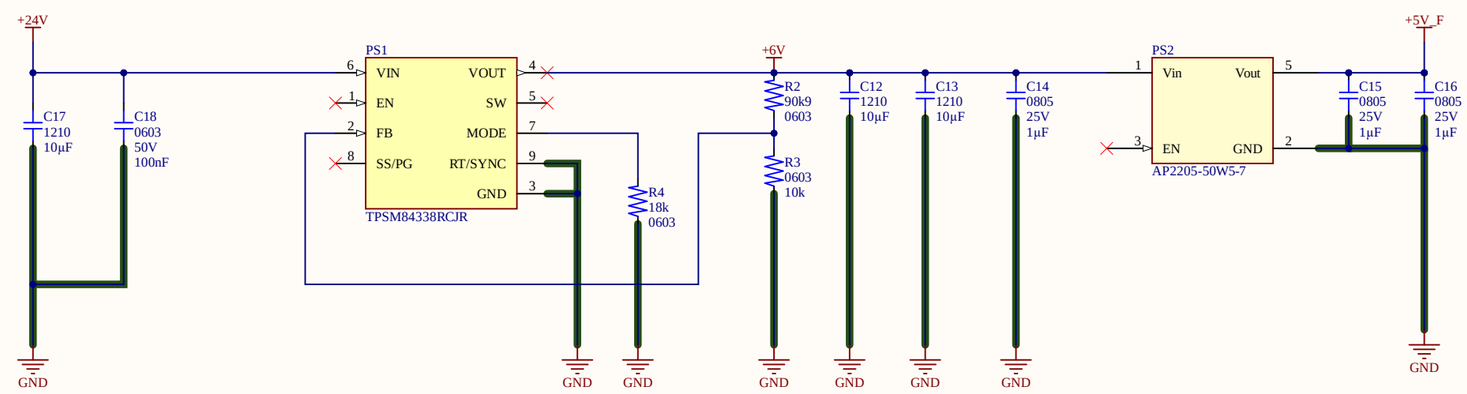

THE UNIVERSITY OF AKRON

ZIPS RACING ELECTRIC THE UNIVERSITY OF AKRON

SHEET SIZE	TITLE	PART NUMBER	REVISION
ANSI B	Power Distribution Board	EL0000	AA
	LAST UPDATE 2/26/2026 1:47:33 AM	SHEET 1 of 1	