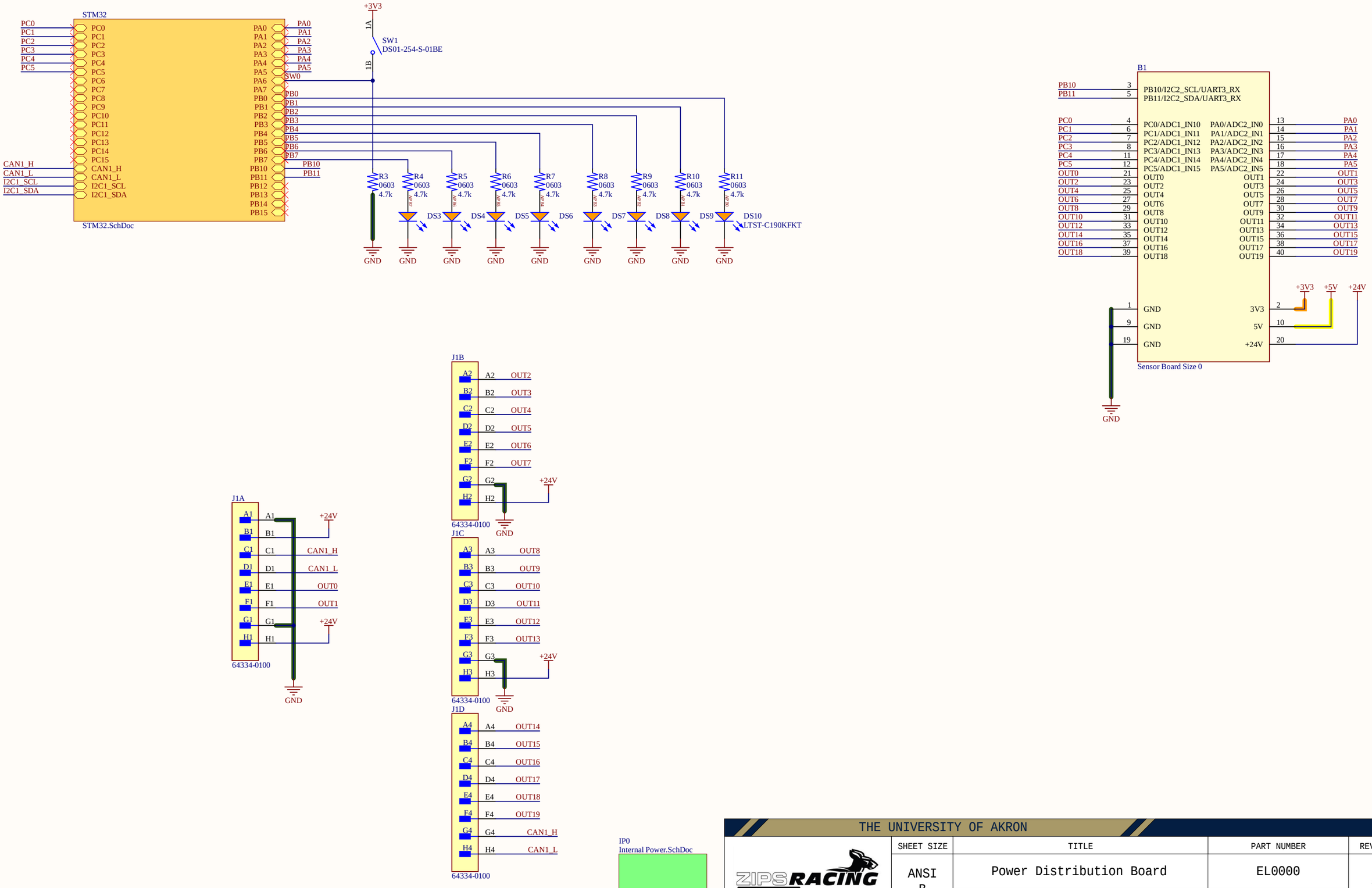

THE UNIVERSITY OF AKRON

SHEET SIZE	TITLE	PART NUMBER	REVISION
ANSI B	Power Distribution Board	EL0000	AA
	LAST UPDATE 2/26/2026 1:48:19 AM	SHEET 1 of 3	

+5V Regulation (8V - 28V) @ 1A

+3V3 Regulation

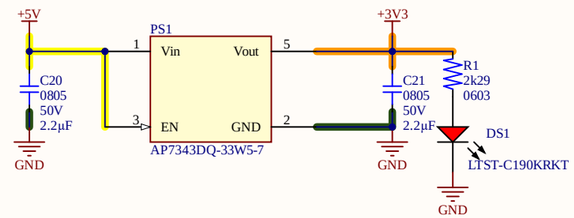

Mounting Holes

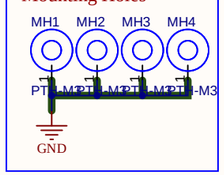

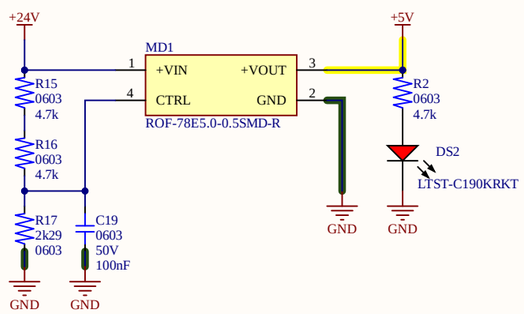

THE UNIVERSITY OF AKRON

SHEET SIZE	TITLE	PART NUMBER	REVISION
ANSI B	Power Distribution Board	EL0000	AA
	LAST UPDATE 2/26/2026 1:48:19 AM	SHEET 2 of 3	

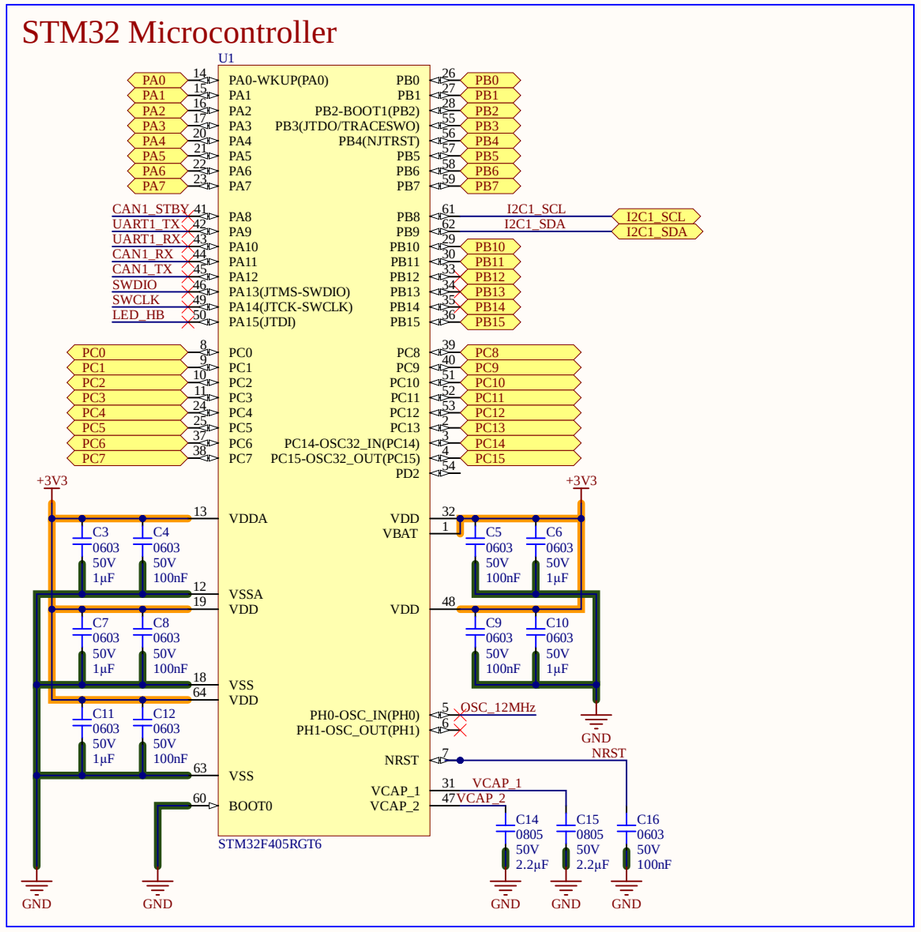

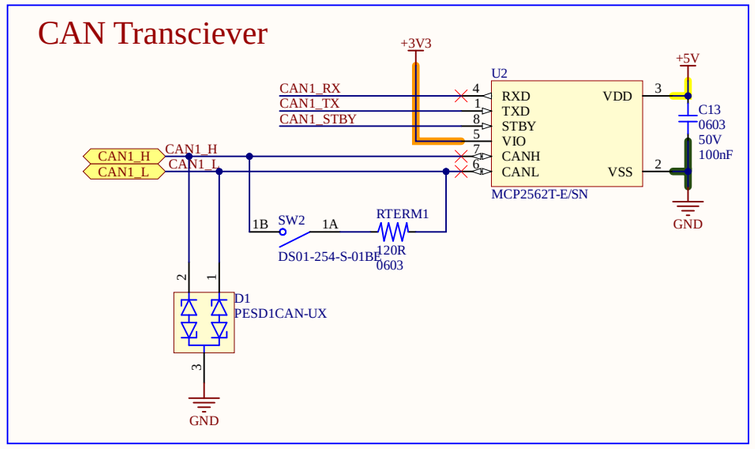

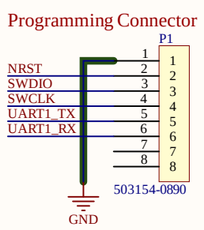

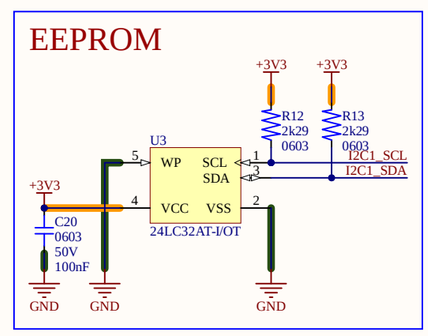

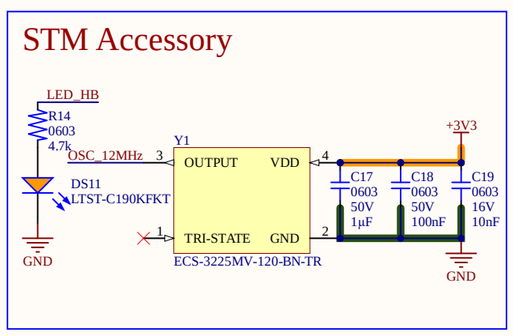

THE UNIVERSITY OF AKRON

ZIPS RACING ELECTRIC THE UNIVERSITY OF AKRON

SHEET SIZE	TITLE	PART NUMBER	REVISION
ANSI B	Power Distribution Board	EL0000	AA
	LAST UPDATE 2/26/2026 1:48:19 AM	SHEET 3 of 3	