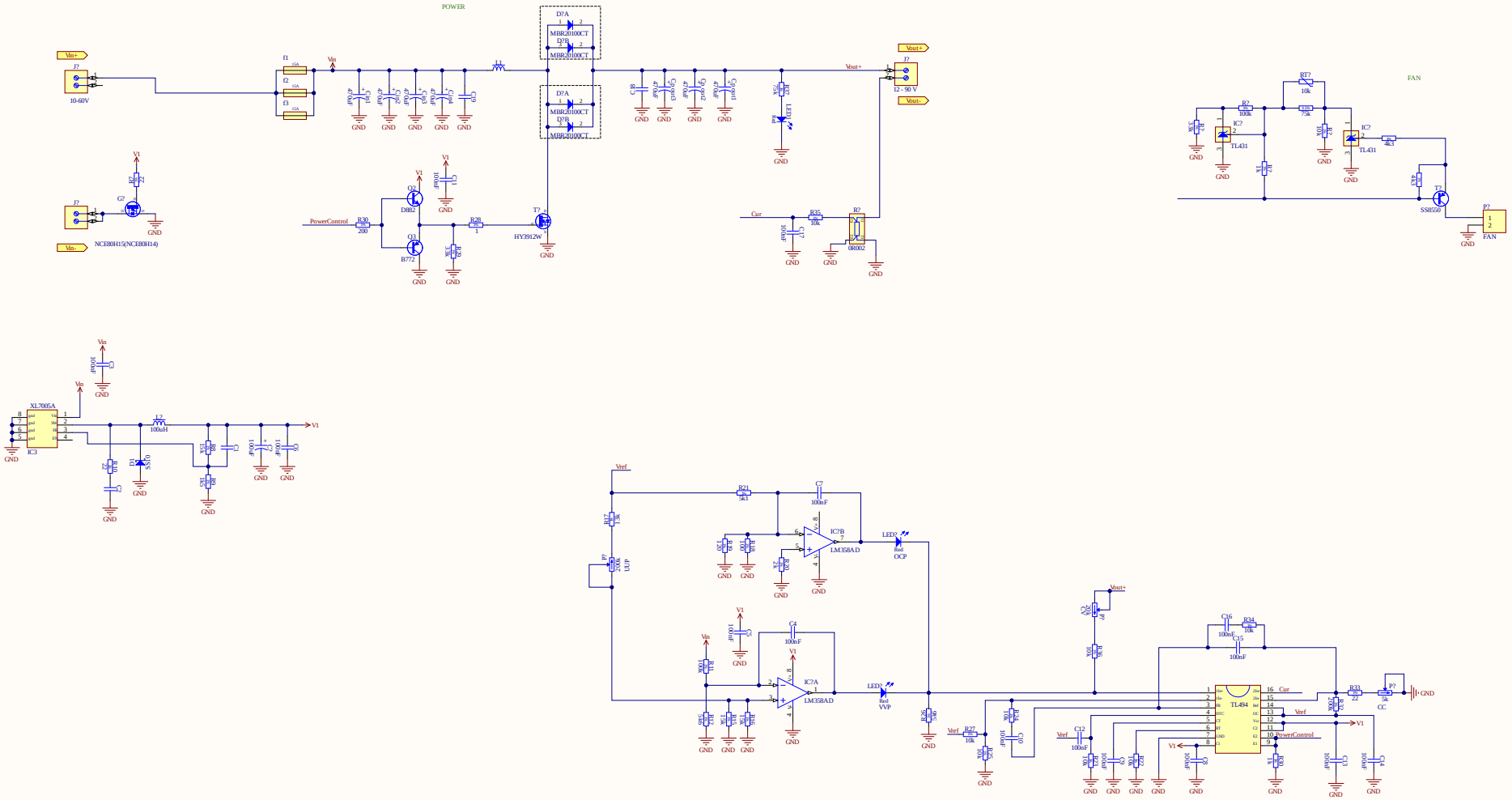

Title *			
Size: A2	Number: *	Revision: *	
Date: 6/28/2020	Time: 4:27:11 PM	Sheet * of *	
File: N:\$Works\OnGlob\dc_dc\PowerDriver\Dc_Dc_SheetSchDoc.SchDoc			

Altium