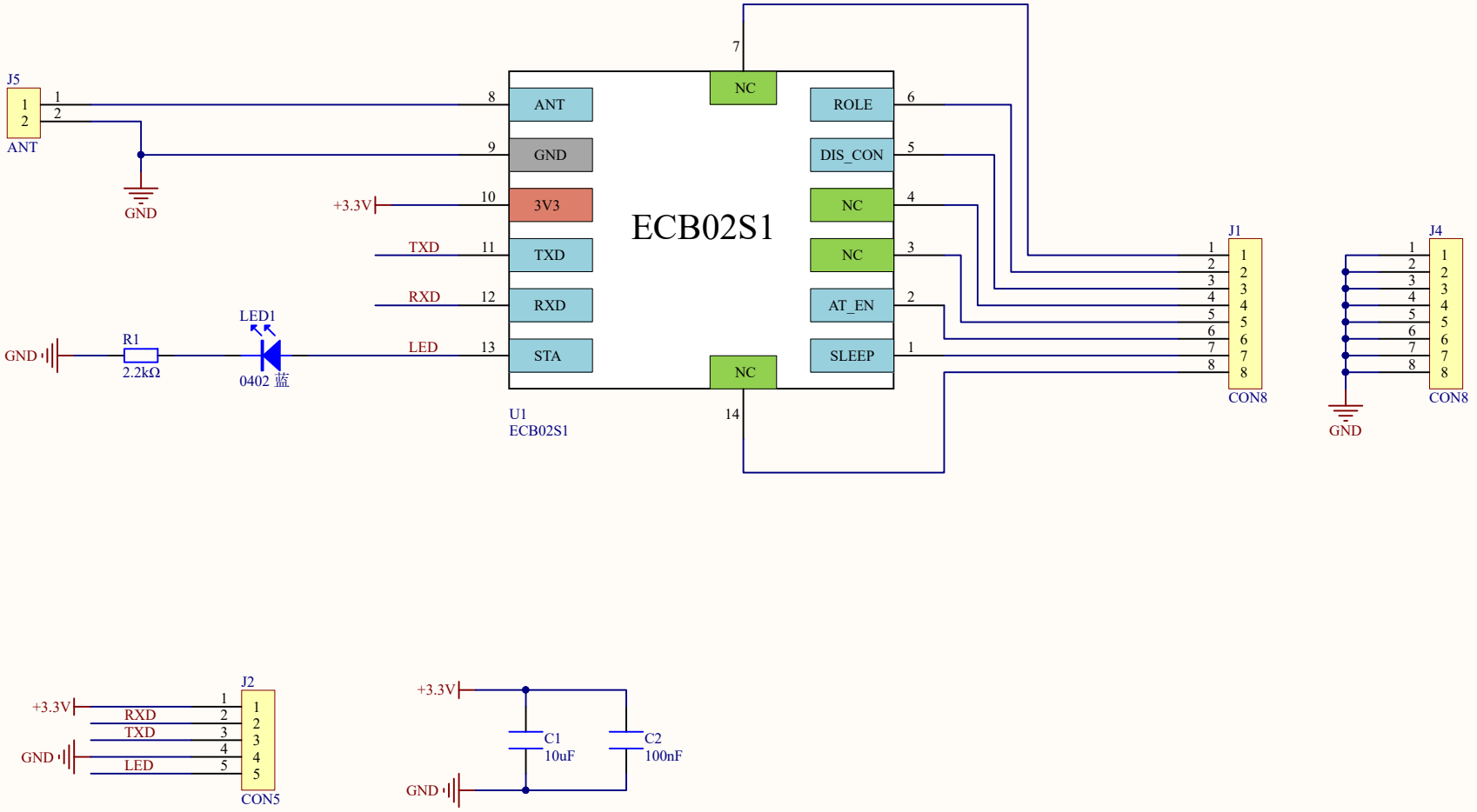

Title		
Size A4	Number	Revision
Date: 2021/8/6	Sheet of	
File: F:\network disk\..\ECB02-Kit-V1.0.SchDoc	Drawn By:	