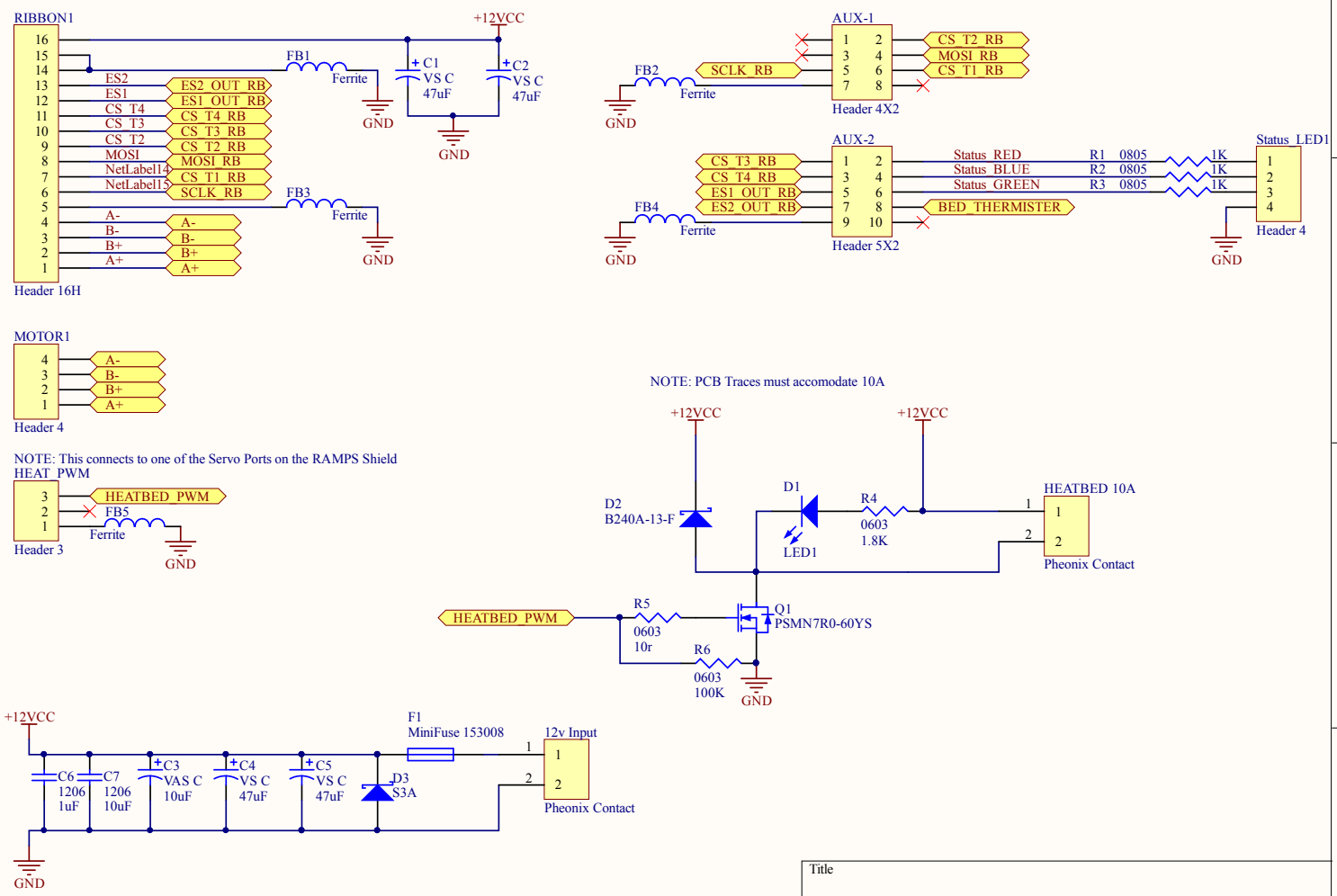

Title		
Size A	Number	Revision
Date: 2/21/2014		Sheet of
File: C:\Users\..\Ribbon Breakout.SchDoc		Drawn By:

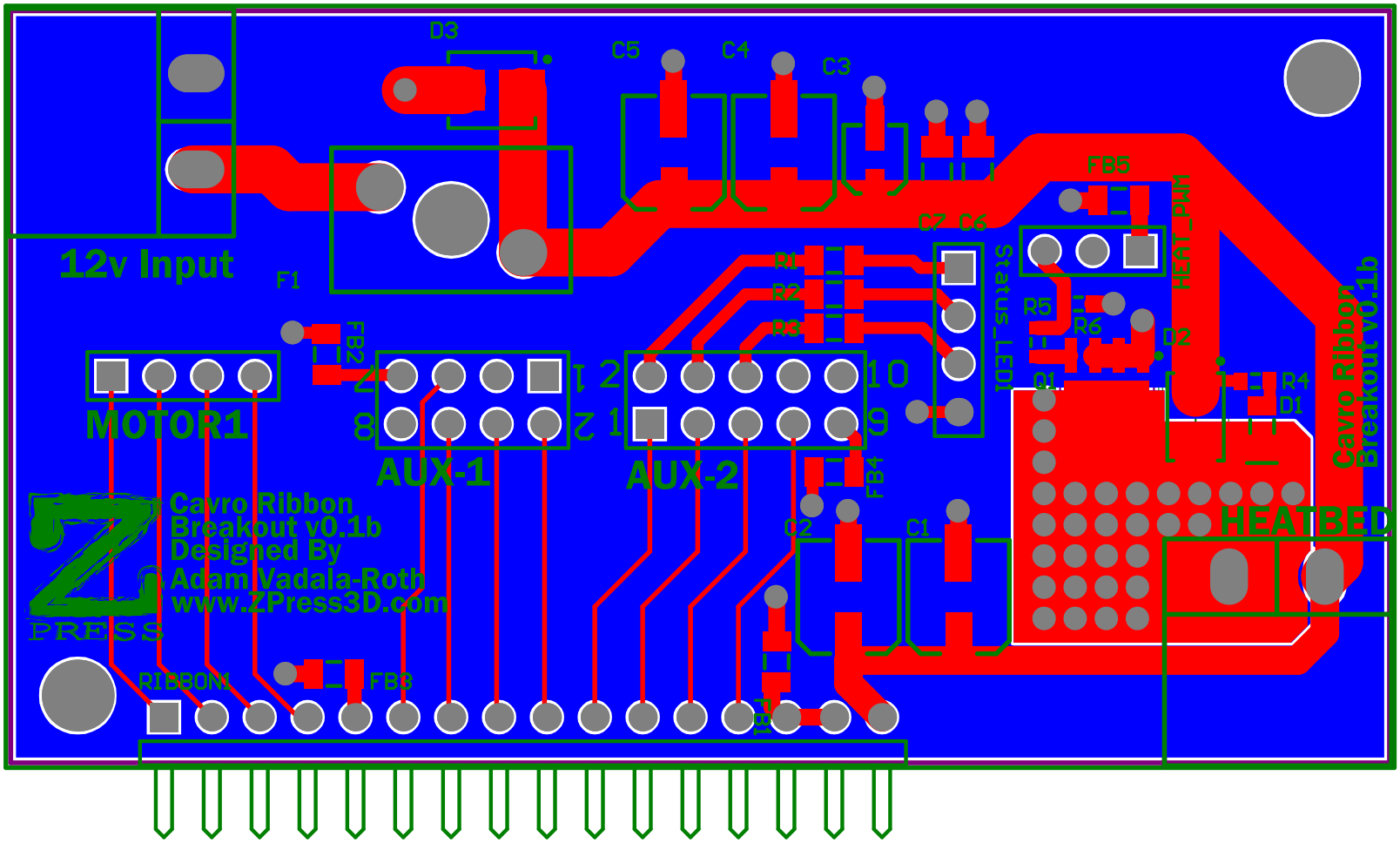
D3
C5
C4
C3
FB5
C7 C6
HEAT_PWM
12v Input
F1
R1
R2
R3
R5
R6
D2
Q1
R4
D1
Status_LED1
FB2
MOTOR1
AUX-1
AUX-2
FB4
Cavro Ribbon
Breakout v0.1b
HEATBED
Cavro Ribbon
Breakout v0.1b
Designed By
Adam Vadala-Roth
www.ZPress3D.com
PRESS
C2
C1
RIBBON1
FB3
Q2