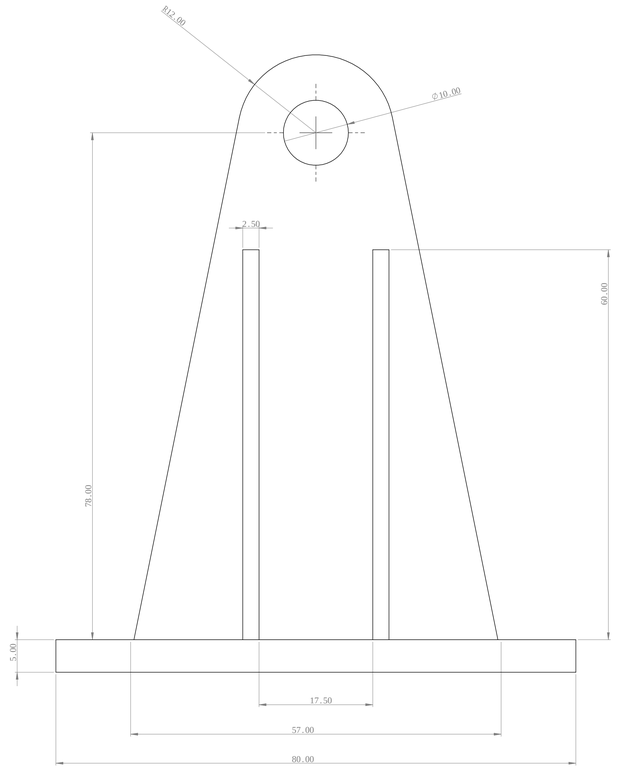

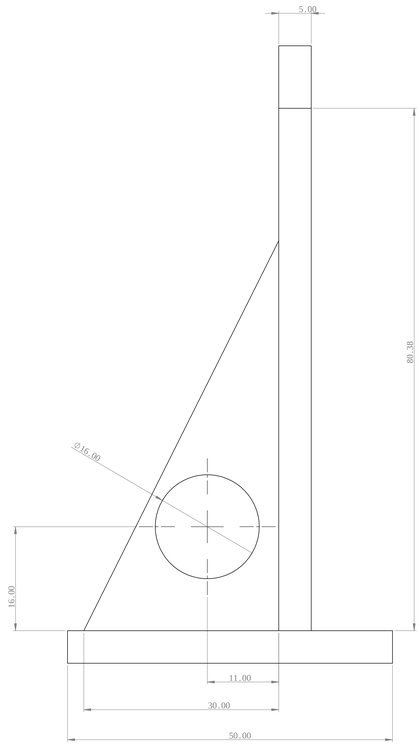

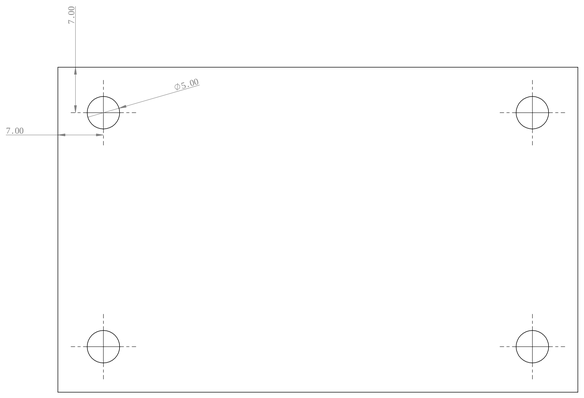

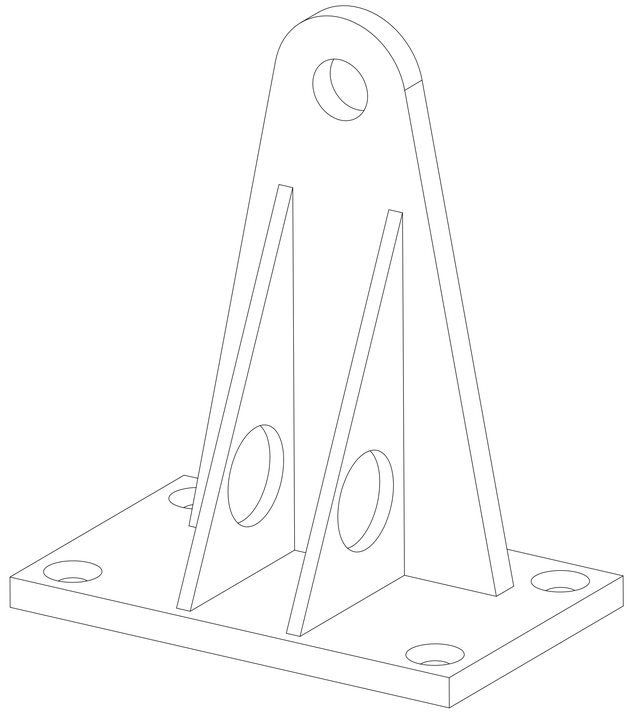

Zhu Chenhao	
Part1	A0